BUILD THE

MERCEDES-BENZ W 196 R

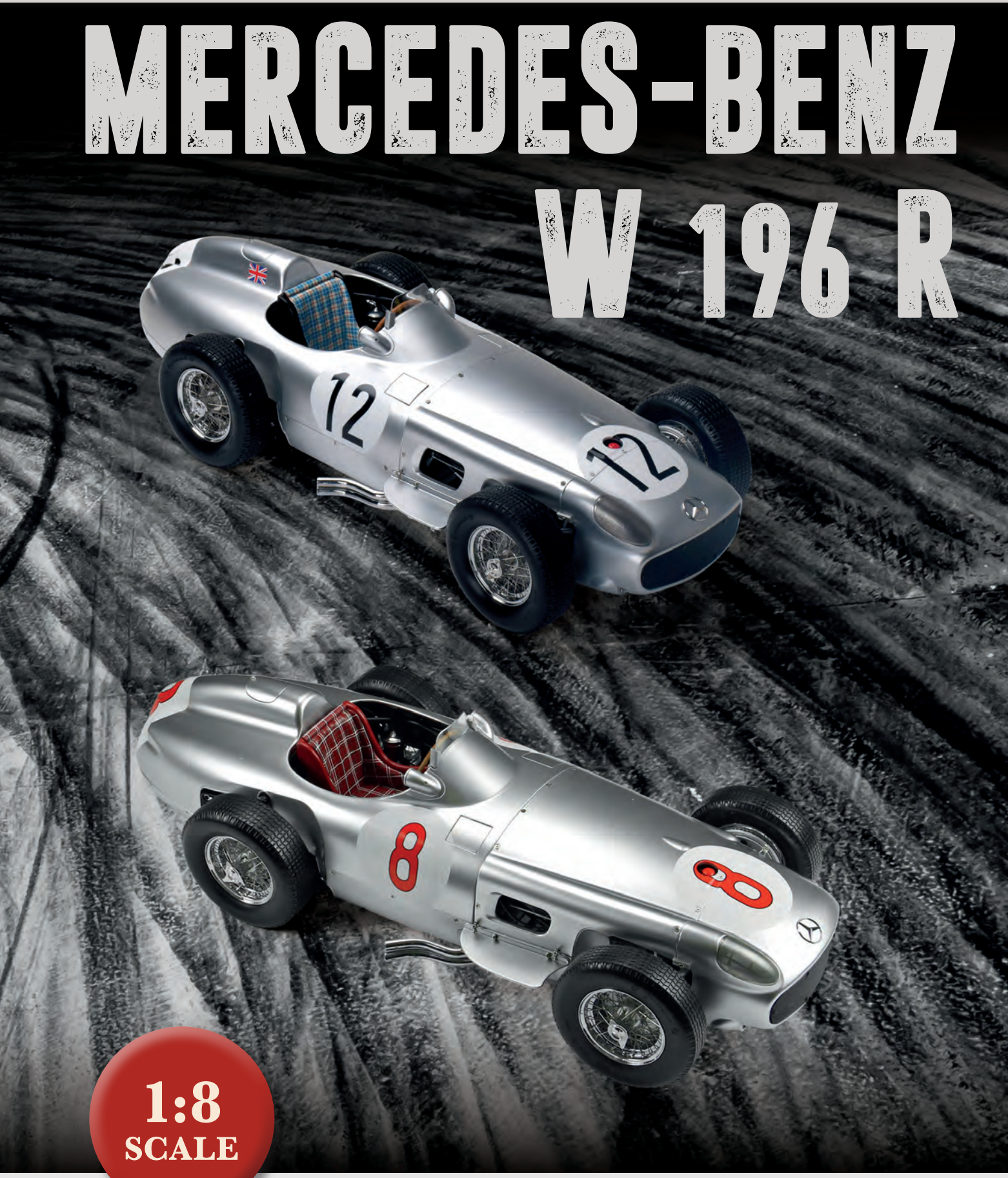

1:8 SCALE

ixo COLLECTIONS

BUILD THE

MERCEDES-BENZ W 196 R

Guide to the instructions

This set of step-by-step instructions will enable you to complete the build of your **1:8-scale Mercedes-Benz W 196 R**. The only tool you will need is a screwdriver. Most of the steps involve simply screwing or fitting parts together, and the correct screws needed for each step are clearly labelled on the instructional images.

This instruction set is valid for both the Juan Manuel Fangio kit and the Stirling Moss kit. The only differences between these two kits are in the appearance of some parts of the scale models.

Please note the following:

- Where left and right elements of the same part are supplied, these are listed as (L) and (R).
- Close-up details of steps are framed in yellow.
- You will not be using every part you receive in your shipment in that build section. Keep any parts that are not used aside for use in a later sequence.
- You will receive extra screws with each shipment in case any screws are lost or broken.
- Screws with codes ending in the letter M drive into metal; those ending in the letter P drive into plastic.
- With M screws, first drive the screw in half-way. Then unscrew it to release the shavings created as the screw cuts its thread. Finally, drive the screw fully into the socket.
  M screws should be tightened so the head makes firm contact with the fixing surface.
- With P screws, do not over-tighten them as they can damage the socket.
- When working with the pre-finished exterior surfaces of the model, work on a soft cloth. This will protect against scratching the paintwork.
- When plugging wires in, ensure the power is switched off.
- Tweezers can be used to fit the PVC cables. In this case, grip carefully around 5mm from the end of the cable. If the end of the cable is too narrow to fit on to the pin, cautiously insert a cocktail stick, being wary not to split the cable.
- Some smaller plastic parts are attached to sprues. You can remove these by hand, or by careful use of a cutting implement such as a scalpel.
- When assembling the wheels of your model, you can choose between regular and easy assemblies. Follow our instructions carefully.



"Mercedes-Benz", , and the design of the enclosed product are subject to intellectual property protection owned by Daimler AG. They are used by Premium and Collectibles Trading Co Ltd. under license.

© IXOCOLLECTIONS SAS
© IXOMODELS

Customer service: contact@ixo-collections.fr

Packaged by: Milanoedit srl, www.milanoedit.com
Model assembly: Enrico Del Prete
Photography credits: Harry Pot / Anefo CC0 (p.3)



MERCEDES-BENZ W 196 R

The Mercedes-Benz W 196 R designed for the 1954 season met all the demands of the new Grand Prix formula decreed by the sport's governing body, the CSI (Commission Sportive Internationale): a capacity of 750 cc with or 2500 cc without supercharger, free choice of gas mixture, a racing distance of 300 kilometres or a minimum of three hours. The streamlined version was completed first because the Reims

Der für die Saison 1954 konstruierte Mercedes-Benz W 196 R erfüllt alle Bedingungen der neuen Grand-Prix-Formel der CSI (Commission Sportive Internationale): Hubraum 750 Kubikzentimeter mit oder 2500 Kubikzentimeter ohne Kompressor, beliebige Zusammensetzung des Treibstoffs, Renndistanz 300 Kilometer, mindestens jedoch drei Stunden. Zuerst fertig gestellt wird die Stromlinien-Version, weil das Auftaktrennen in Reims sehr

La Mercedes-Benz W 196 R, conçue pour la saison 1954, répondait à toutes les exigences de la nouvelle formule du Grand Prix décrétée par l'instance dirigeante du sport, la CSI (Commission Sportive Internationale) : une capacité de 750 cm^3 avec ou 2500 cm^3 sans compresseur, libre choix du mélange de gaz, une distance de course de 300 kilomètres ou un minimum de trois heures. La version simplifiée a été complétée en premier parce que la course de Reims qui

race kicking off the season permitted very high speeds. After that there was also a version with exposed wheels.

Fritz Nallinger was in charge of the project as a whole, ably assisted by Rudolf Uhlenhaut, Chief Engineer of the racing department since 1 September 1936, and after the war also head of the Car Testing department, who influenced the development decisively. And although, yet again, in the case of the W 196 R, the whole was much more than the sum of its parts, every component is worth mentioning: cutting-edge technology in terms of its era, in spite of the fact that, in some cases, there had been precedents in the history of motor sports. This silver masterpiece, of which 14 units including a prototype were built, drove its competitors to despair in the following two years. Its original streamlined body was both expedient and visually appealing. From the European Grand Prix on the Nürburgring in early August 1954 onward, however, an open-wheel (monoposto) version also formed part of the line-up. Its tubular space frame was light and sturdy, its suspension with torsion bars and a new single-joint swing axle at

hohe Geschwindigkeiten zulässt. Danach gibt es noch eine Variante mit freistehenden Rädern.

Mit der Leitung des Projekts betraut ist Fritz Nallinger. Maßgeblich die Entwicklung beeinflusst Rudolf Uhlenhaut, seit dem 1. September 1936 Technischer Leiter der Rennabteilung und nach dem Krieg zudem Leiter der Pkw-Versuchsabteilung. Und obwohl im Falle des W 196 R einmal mehr das Ganze viel mehr ist als die Summe der Teile, ist jedes Element der Rede wert, damalige Technologie vom Besten – auch wenn sich gelegentlich in den Tiefen der Vergangenheit Präzedenzfälle finden. Das Meisterstück in Silber, gefertigt in vierzehn Exemplaren inklusive eines Prototyps, lässt in den nächsten beiden Jahren die Konkurrenz verzagen. Der ursprüngliche Stromlinienaufbau ist zweckmäßig und schön zugleich, allerdings wird ab dem Großen Preis von Europa auf dem Nürburgring Anfang August 1954 eine Version mit frei stehenden Rädern (Monoposto) zur Standardausrüstung. Der Gitterrohrrahmen ist leicht und stabil, das Fahrwerk mit Drehstab-Aufhängung und einer neuen Eingelenk-Pendelachse hinten sowie riesigen turbogekühlten,

débutait la saison permettait des vitesses très élevées. Après cela, une version avec des roues apparentes a également été construite.

Fritz Nallinger était en charge du projet dans son entier, habilement assisté par Rudolf Uhlenhaut, ingénieur en chef du département des courses depuis le 1er septembre 1936 et, après la guerre, également chef du département des essais des voitures, qui a contribué de manière décisive au développement. Et bien que, encore une fois dans le cas de la W 196 R, l'ensemble était bien plus que la somme de ses parties, chaque composant mérite d'être mentionné : c'était la technologie de pointe pour cette époque, bien qu'il y avait eu, dans certains cas, des précédents dans l'histoire du sport automobile. Ce chef-d'œuvre argenté, dont 14 exemplaires y compris un prototype ont été construits, a poussé ses concurrents au désespoir au cours des deux années suivantes. Sa carrosserie aérodynamique originale était à la fois opportune et visuellement attrayante. À partir du Grand Prix d'Europe au Nürburgring au début du mois d'août 1954, une version à roues ouvertes (monoplace) fait également partie de l'équipe. Son cadre spatial tubulaire était léger et robuste, les suspensions avec des barres de torsion et un

the rear as well as the giant, turbo-cooled, and at first centrally arranged Duplex drum brakes were unconventionally good. The eight-cylinder in-line engine with direct injection and desmodromic valve control (1954: 256 hp (188 kW) at 8260 rpm, 1955: 290 hp (213 kW) at 8500 rpm) was installed into the space frame at an angle of 53 degrees to the right to lower the centre of gravity and reduce the frontal area. What's more, meticulous preparations for each individual race harked back to the glorious 1930s while at the same time anticipating the modern Formula One approach. But there was something else as well: so as to have the best cars in the world raced by the best drivers, racing manager Alfred Neubauer hired the – initially reluctant – superstar Juan Manuel Fangio, plus the up-and-coming Stirling Moss in 1955 – a virtually invincible pairing.

The W 196 R's track record was impressive indeed: nine victories and fastest laps, as well as eight pole positions in the twelve Grand Prix races in which it was entered, and, of course, Fangio's world champion's titles in 1954 and 1955. There was little room for improvement.

zunächst innen mittig untergebrachten Duplex-Trommelbremsen unkonventionell gut. Der Reihenachtzylinder mit direkter Einspritzung und desmodromisch gesteuerten Ventilen (1954: 256 PS/ 188 kW bei 8260/min, 1955: 290 PS/213 kW bei 8500/ min) ist im Winkel von 53 Grad nach rechts geneigt in das Rahmenfachwerk eingebaut, um den Schwerpunkt abzusenken und die Stirnfläche zu verkleinern. Dazu kommen die minutiöse Vorbereitung und Durchführung des Projekts Grand Prix im Zeichen des Stuttgarter Sterns, die einerseits an die ruhmreichen 1930er Jahre erinnern und zugleich die Formel-1-Moderne vorwegnehmen. Und noch etwas: Damit das beste Fahrzeug auch vom besten Fahrer gesteuert wird, hat Rennleiter Alfred Neubauer den anfänglich widerstrebenden Top-Lenker Juan Manuel Fangio engagiert, dazu 1955 den vielversprechenden Stirling Moss – ein schier unschlagbares Duo.

Die Bilanz des W 196 R: neun Siege und schnellste Runden sowie acht Pole-Positions in den zwölf Grand Prix, an denen er teilnimmt, sowie die beiden Fahrertitel 1954 und 1955 für Fangio. Viel besser geht's nicht.

nouvel essieu oscillant à un seul joint à l'arrière ainsi que les freins à tambour duplex géants, turbo-cooling et d'abord disposés centralement, étaient exceptionnellement bons. Le moteur à huit cylindres en ligne à injection directe et commande de soupape desmodromique (1954: 256 ch (188 kW) à 8260 tr/min, 1955: 290 ch (213 kW) à 8500 tr/min) a été monté dans le cadre spatial à un angle de 53 degrés vers la droite pour abaisser le centre de gravité et réduire la zone frontale. En outre, les préparatifs méticuleux pour chaque course individuelle rappelaient les glorieuses années 1930 tout en anticipant l'approche moderne de la Formule Un. Mais il y avait aussi autre chose : pour que les meilleures voitures du monde soient conduites par les meilleurs pilotes, le directeur de course Alfred Neubauer a embauché la superstar Juan Manuel Fangio, qui était réticent au début, ainsi que le prometteur Stirling Moss en 1955 – un duo pratiquement invincible.

Le palmarès de la W 196 R est vraiment impressionnant : neuf victoires et les tours les plus rapides, ainsi que huit pole positions dans les douze courses de Grand Prix auxquelles elle a participé, et, bien sûr, les titres de champion du monde de Fangio en 1954 et 1955. On ne pouvait guère faire mieux !

Key specs

Engine type	M 196 R
Engine location	Front, longitudinally mounted
Cylinders	8 in-line
Valves	16
Cubic capacity	2496 cc
Bore x stroke	76 x 68.8 mm
Compression ratio	12:1
Fuel feed	Direct fuel injection
Lubrication	Dry sump
Aspiration	Naturally aspirated
Power	290 bhp at 8,500 rpm
Torque	247 Nm at 6,300 rpm
Body	Aluminium body panels
Chassis	Steel tubular spaceframe
Front suspension	Double wishbones, torsion bars, telescopic shock absorbers
Rear suspension	Swing axle, longitudinal torsion bars, telescopic shock absorbers
Steering system	Worm-and-sector
Brakes	Light alloy drums, all-round
Drive	Rear wheel drive
Gearbox	5 speed, manual
Clutch plates	Dry, single plate
Length	4,025 mm
Width	1,625 mm
Height	1,040 mm
Wheelbase	2,350 mm
Weight	835 kg
Top speed	Over 300 km/h



01 PARTS LIST



1A	Nose
1B	Badge
1C	Radiator support
1D	Air intake frame
1E	Air intake
1F	Steering wheel
1G	Screwdriver
AP	2 screws (1.7x4mm)
CM	5 screws (1.7x4mm)

A

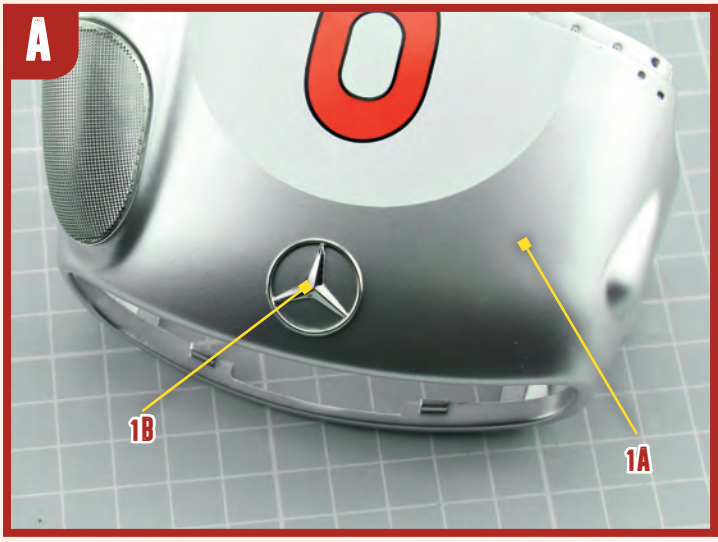

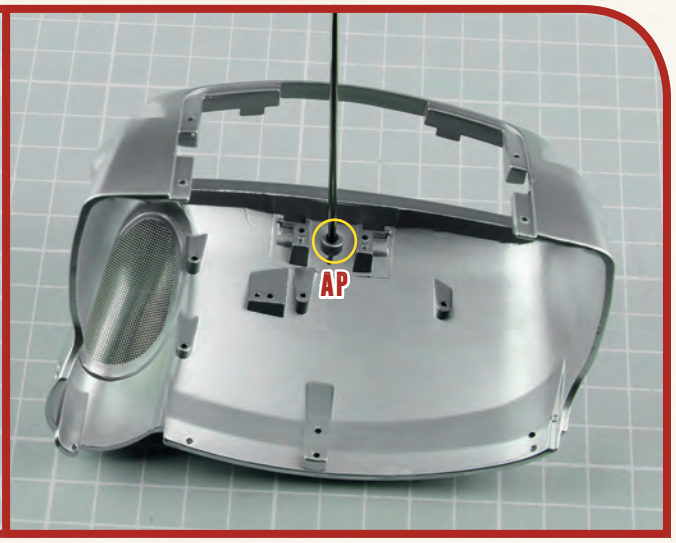

B

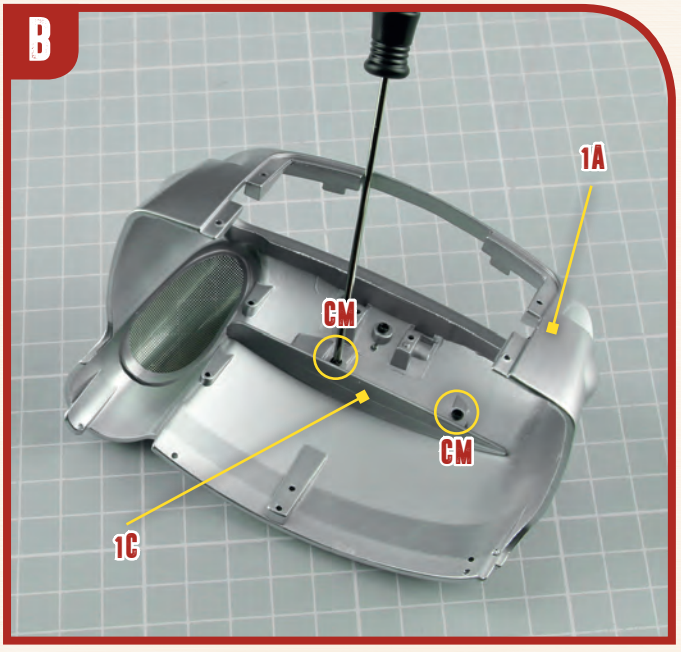

C

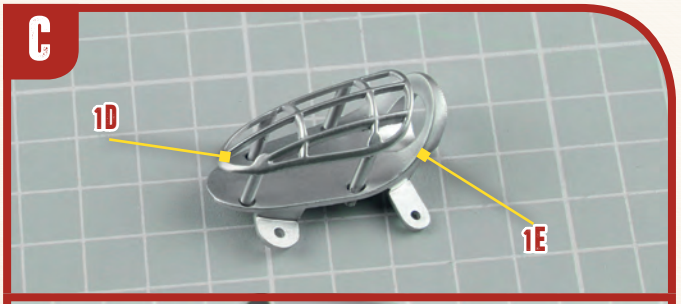

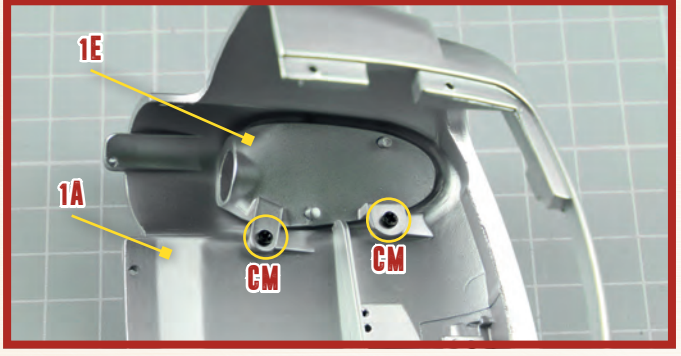

02 PARTS LIST

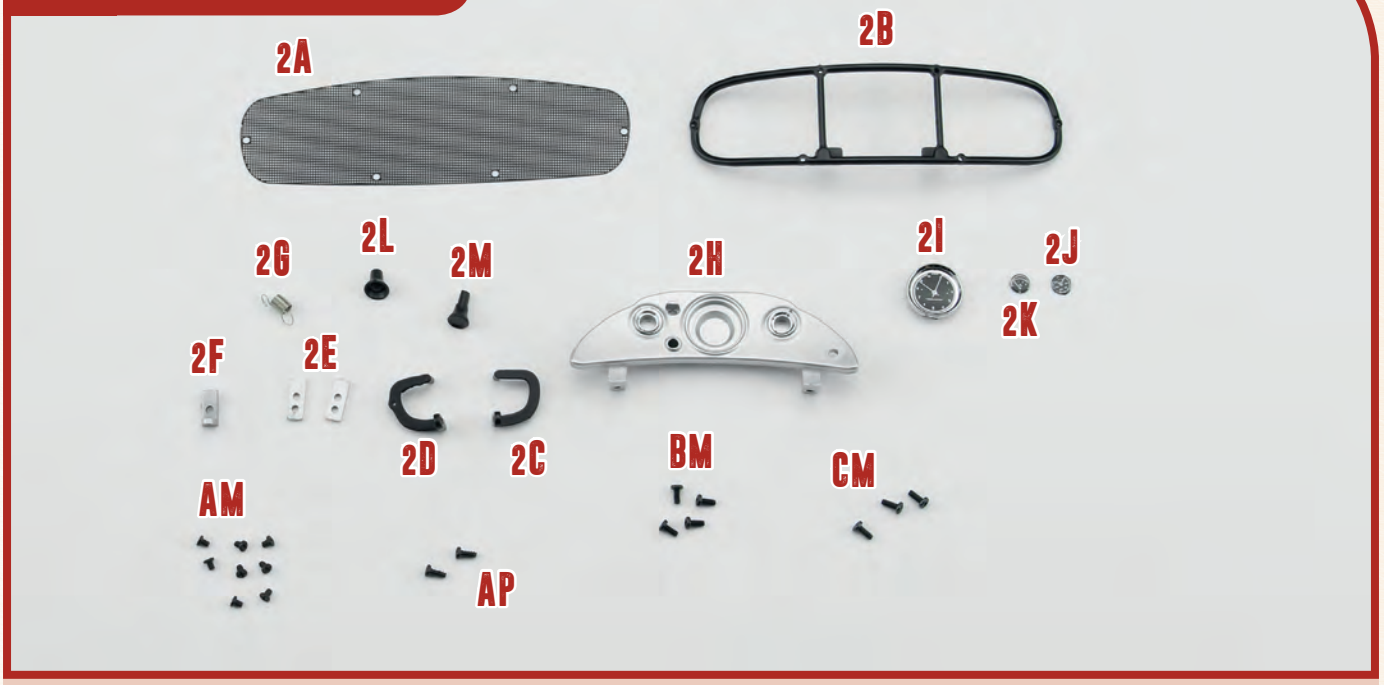

2A	Air intake net	**2H**	Dashboard	**AP**	2 screws (1.7x4mm)
2B	Air intake frame	**2I**	Tachometer	**AM**	8 screws (1.5x2mm)
2C	Hinge (L)	**2J**	Water temperature gauge	**BM**	4 screws (1.7x3mm)
2D	Hinge (R)	**2K**	Oil pressure gauge	**CM**	3 screws (1.7x4mm)
2E	Hinge supports (x2)	**2L**	Low fuel indicator		
2F	Bracket	**2M**	Cold start injector		
2G	Spring				

A

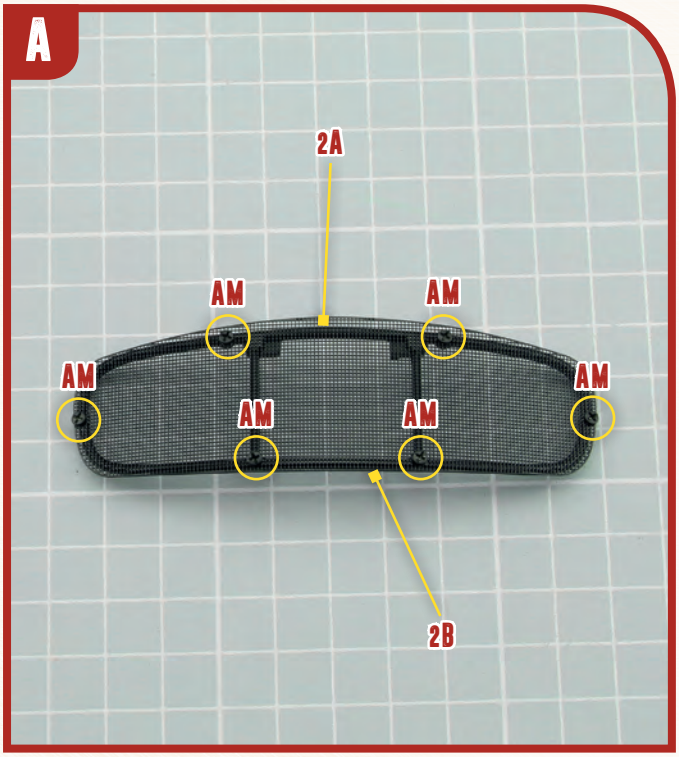

B

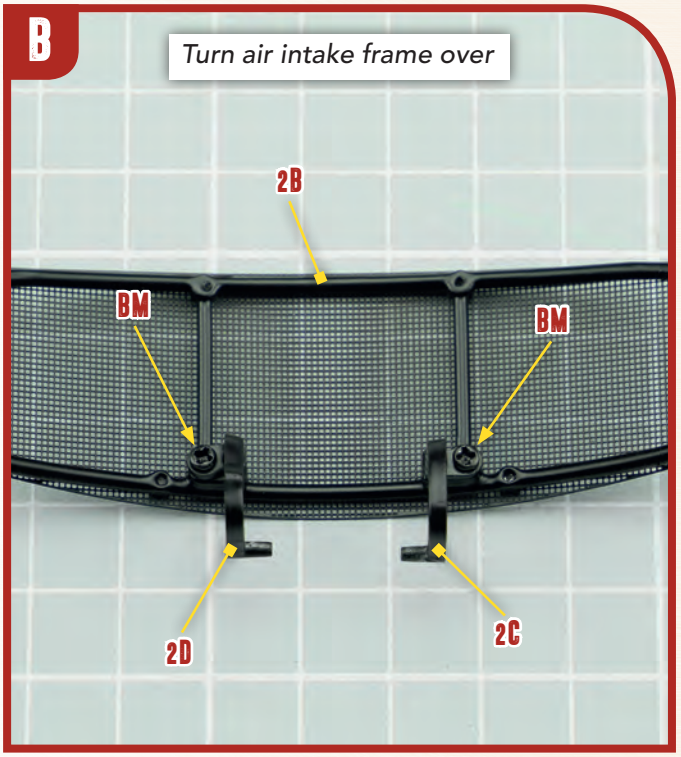

C

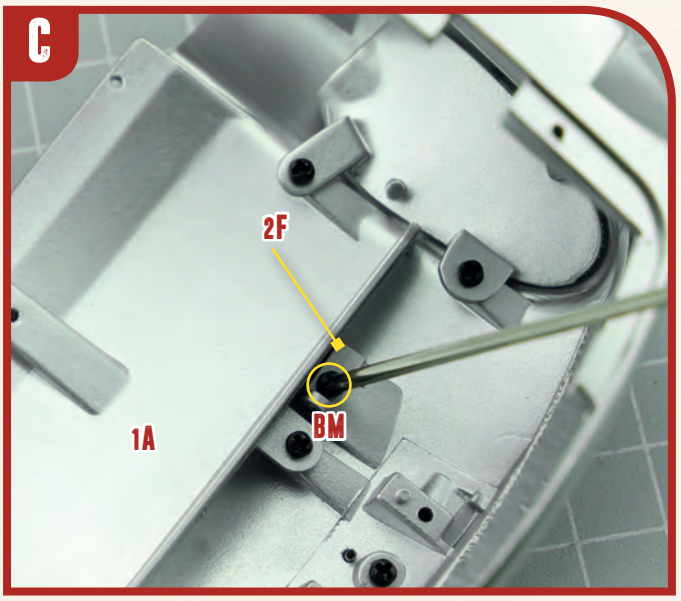
2F
BM
1A

D

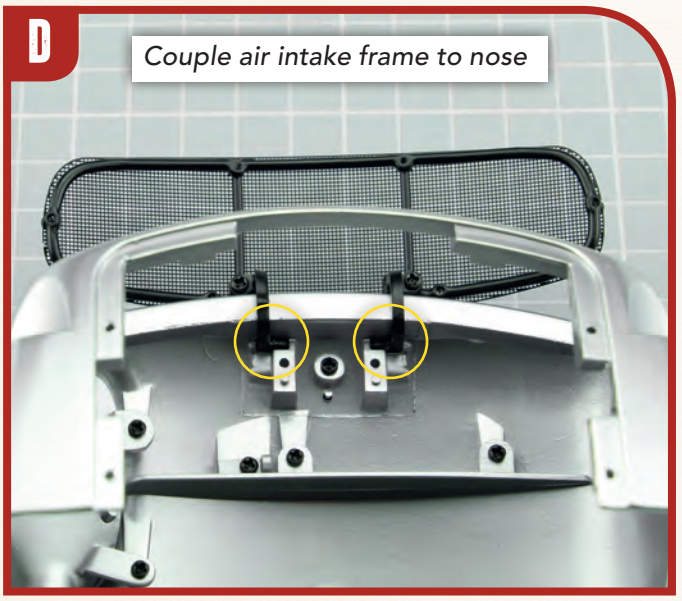
Couple air intake frame to nose

E

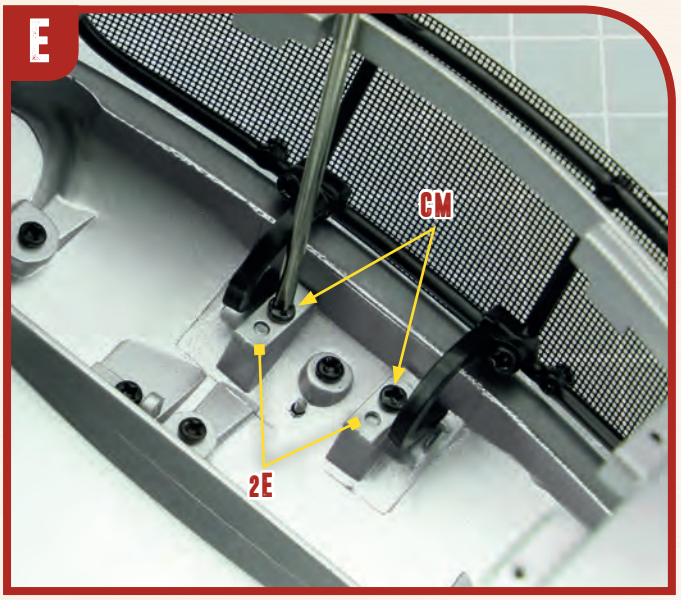
CM
2E

F

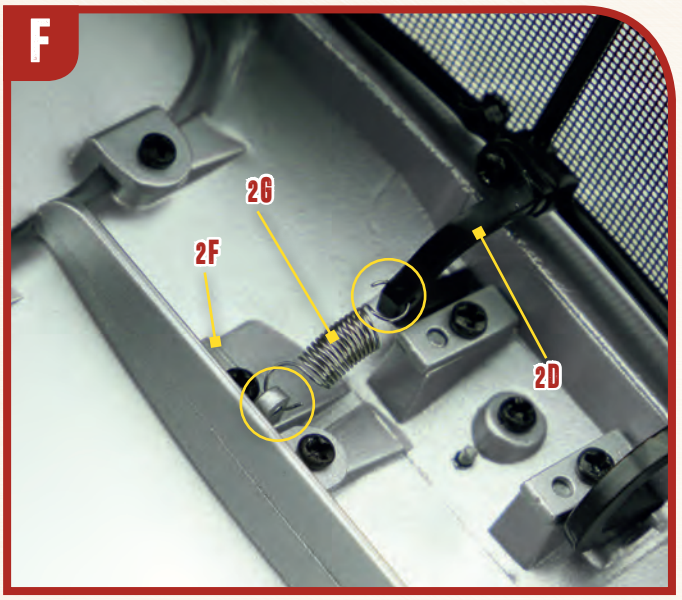
2G
2F
2D

G

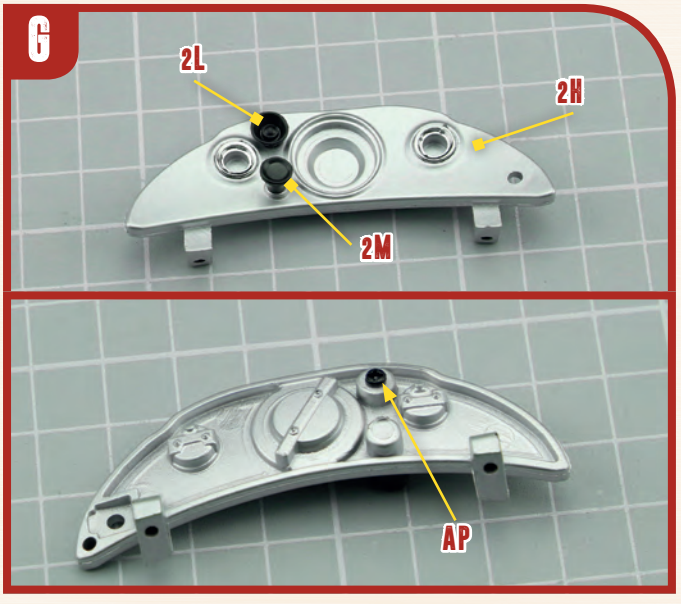
2L
2H
2M
AP

H

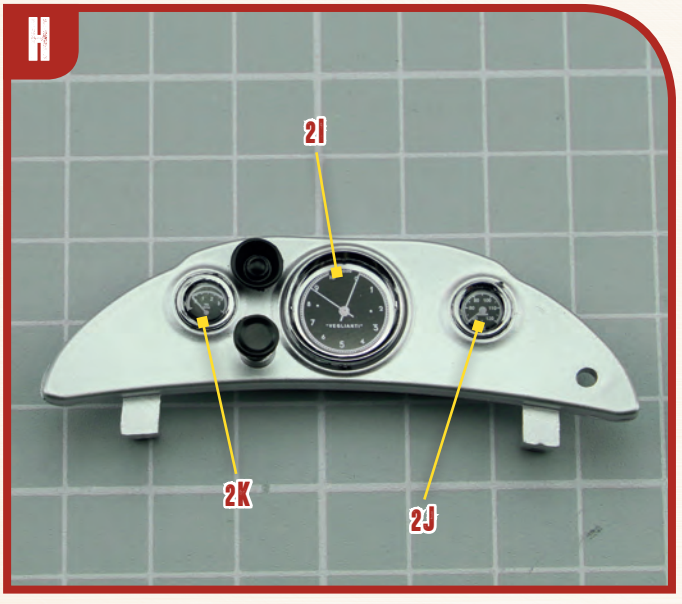
2I
2K
2J

03 PARTS LIST

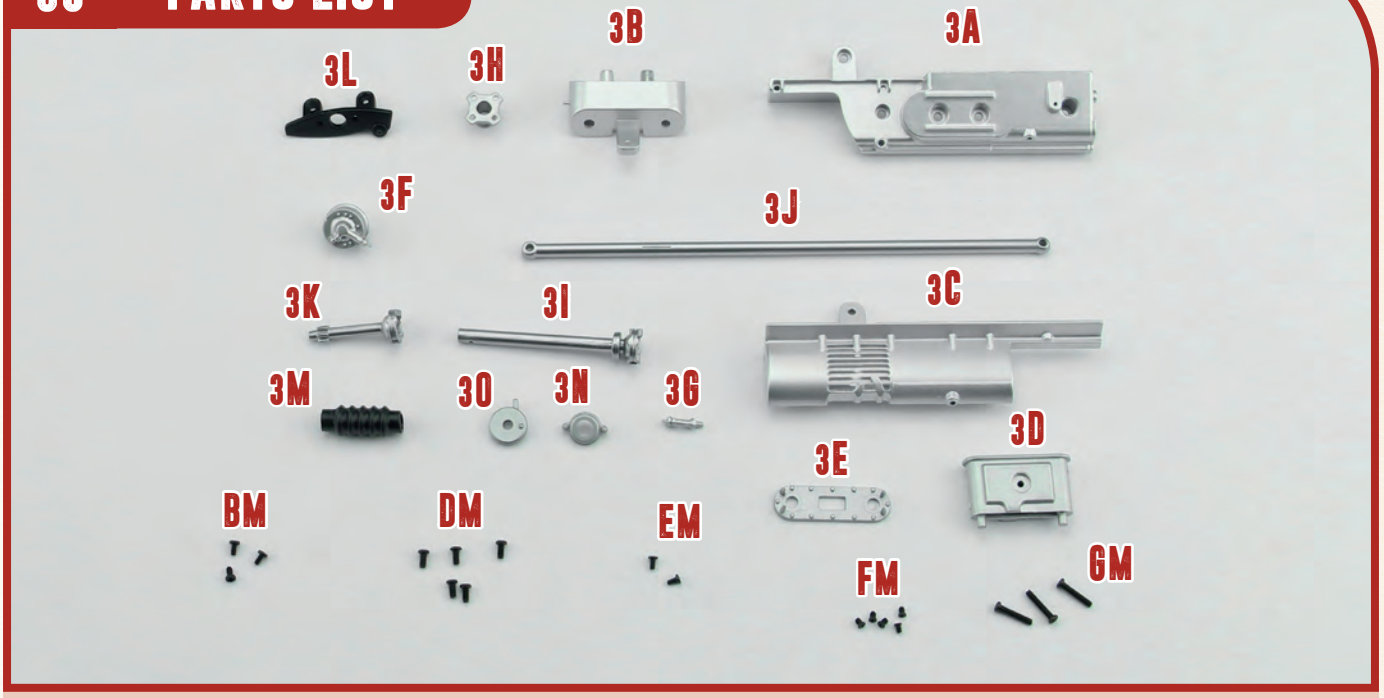

3A	Engine lower block (L)	3H	Steering wheel fitting	3O	Steering wheel detail
3B	Oil pan part A	3I	Steering column part A		
3C	Engine lower block (R)	3J	Steering column part B	BM	3 screws (1.7x3mm)
3D	Oil pan part B	3K	Steering column part C	DM	5 screws (2x4mm)
3E	Oil pan bracket	3L	Panel	EM	2 screws (1.5x3mm)
3F	Oil pump	3M	Bellow	FM	5 screws (1.7x2mm)
3G	Sleeve	3N	Steering column support	GM	3 screws (2x10mm)

A

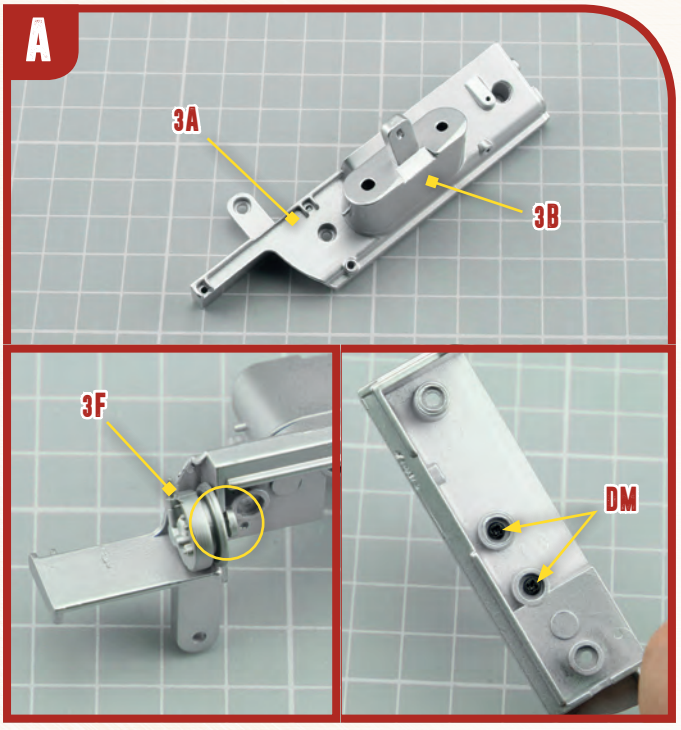

B

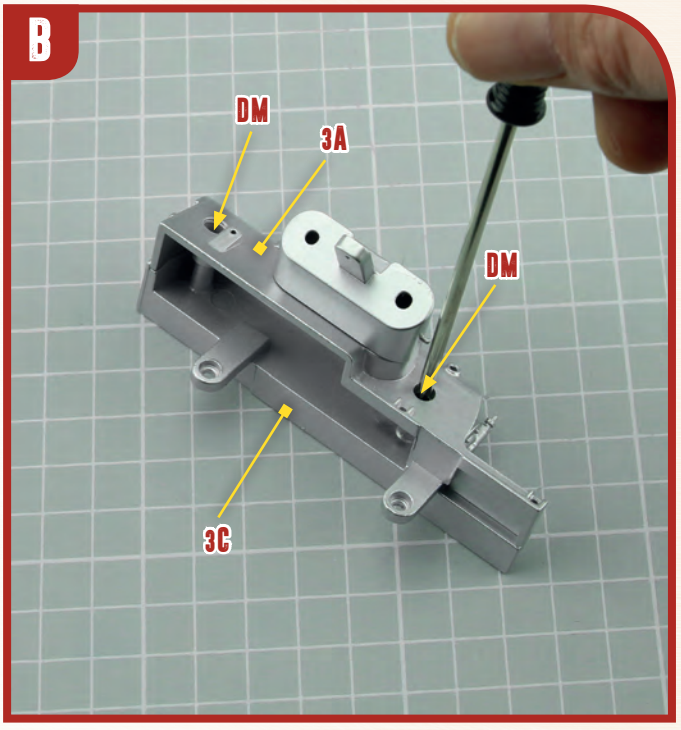

C

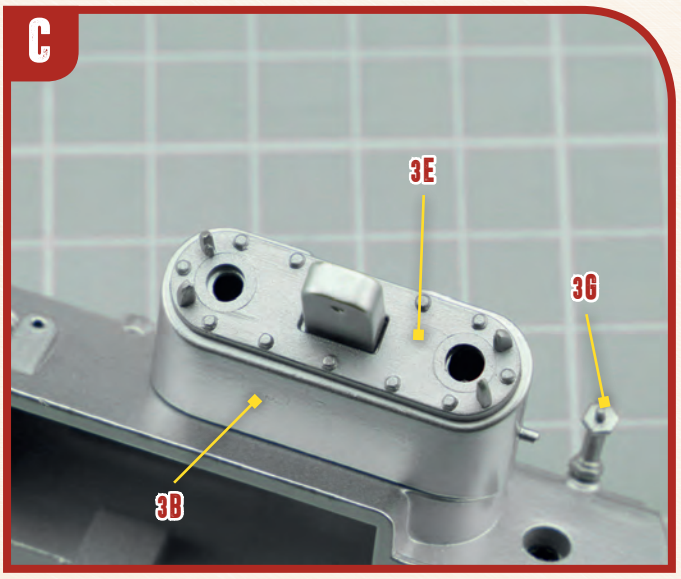
3E
3G
3B

D

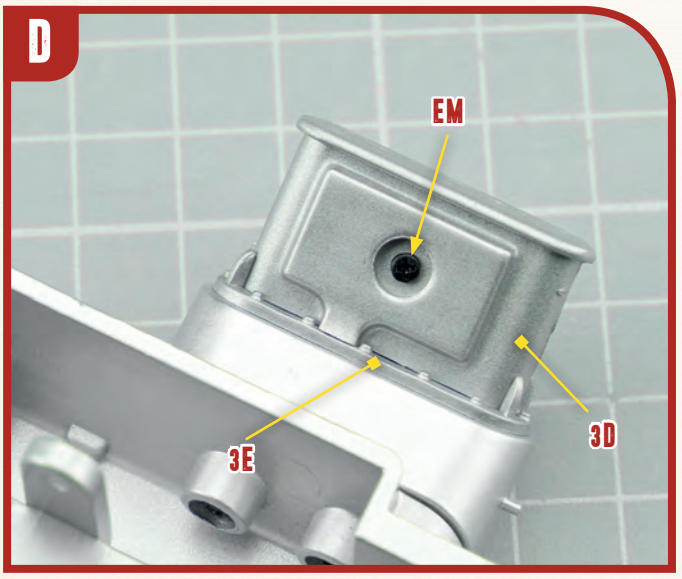
EM
3E
3D

E

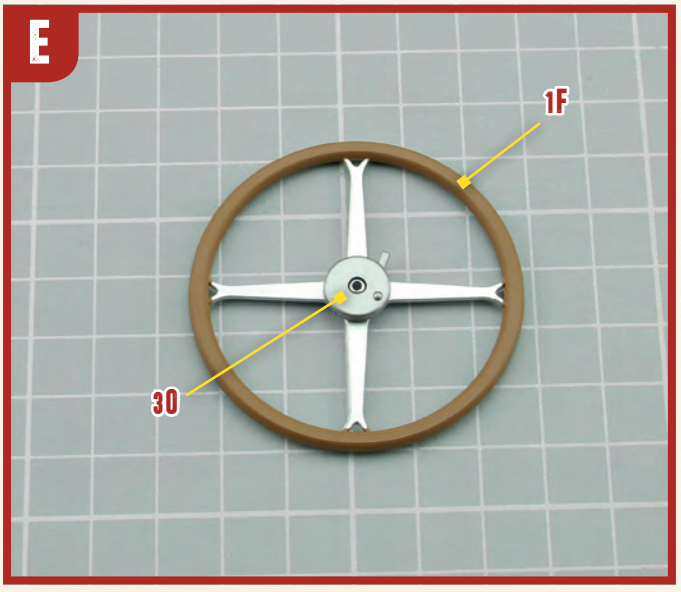
1F
3O

F

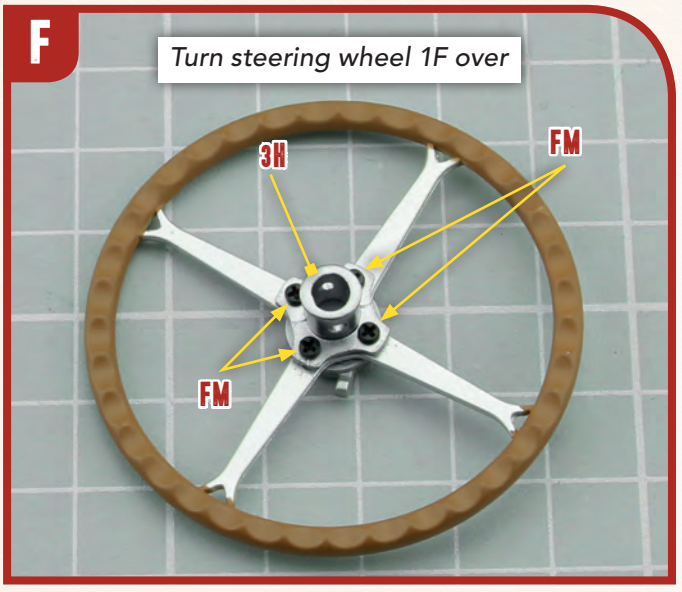
Turn steering wheel 1F over
3H
FM
FM

G

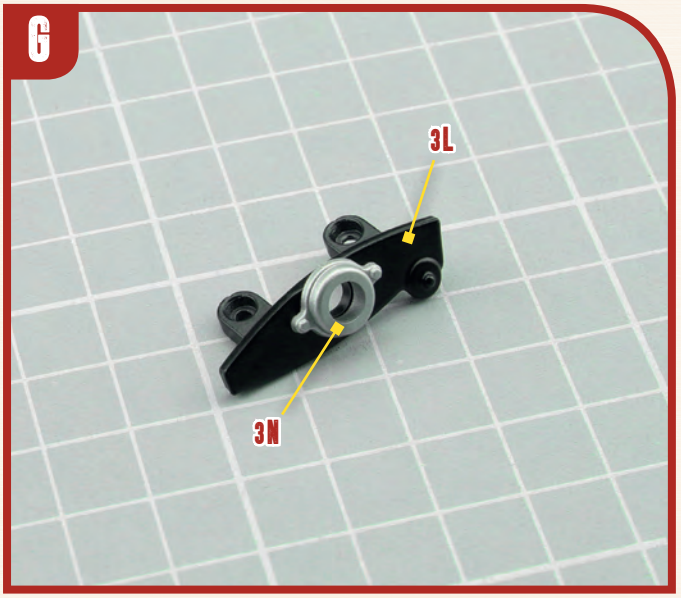
3L
3N

H

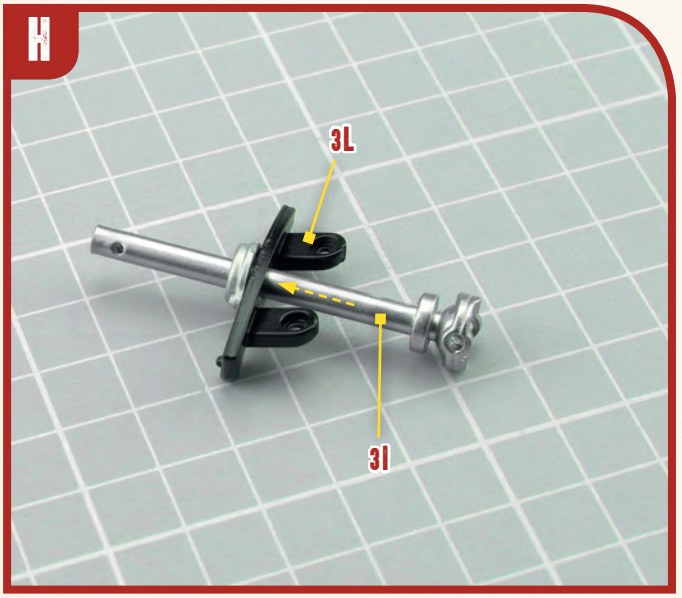
3L
3I

I

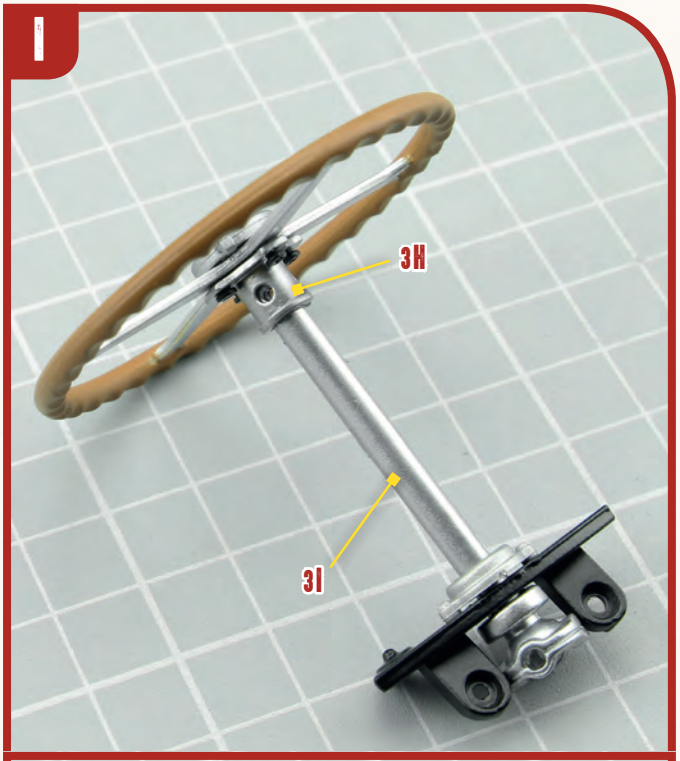

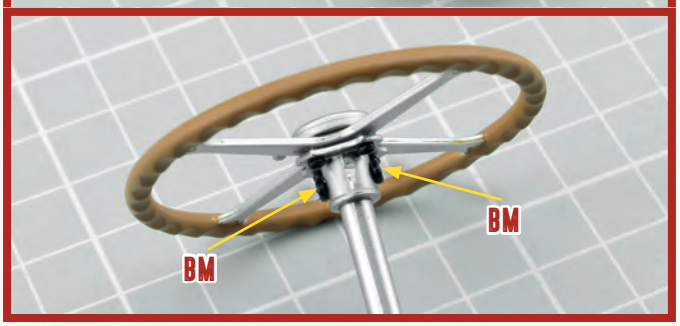

J

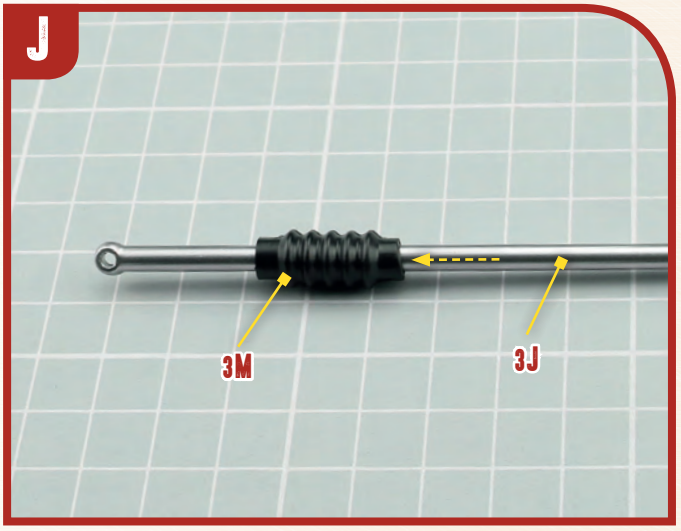

K

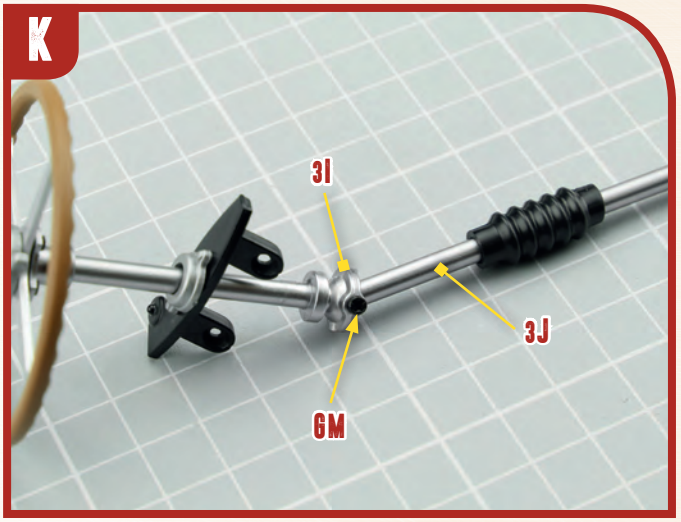

L

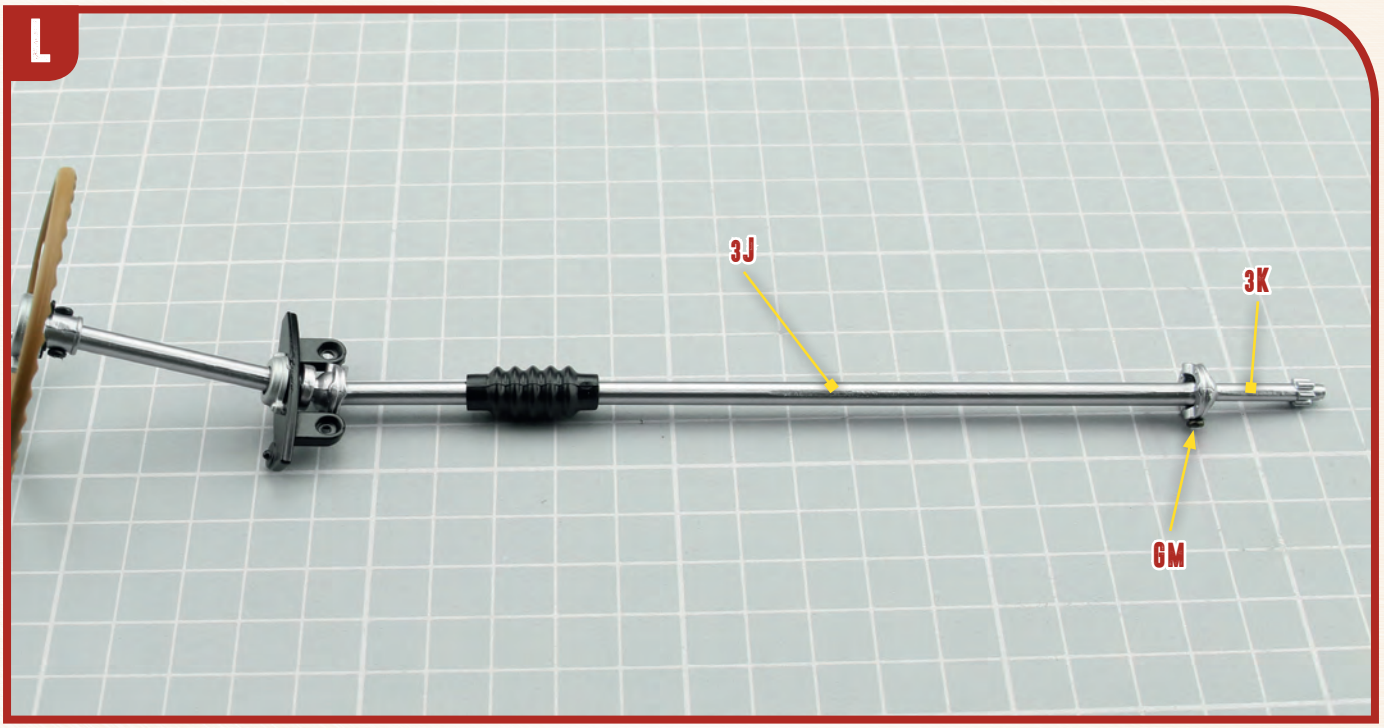

04 PARTS LIST

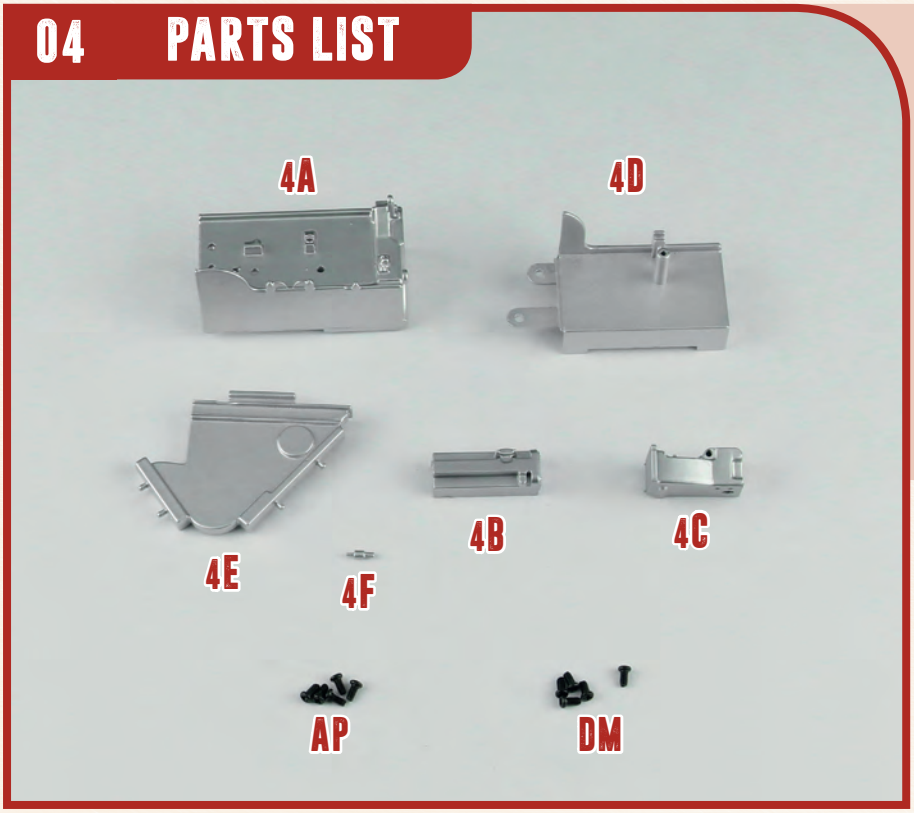

4A	Engine upper block part A (L)
4B	Engine upper block part B (L)
4C	Central gearbox part A
4D	Engine upper block part C (L)
4E	Central gearbox part B
4F	Oil pressure valve
AP	5 screws (1.7x4mm)
DM	5 screws (2x4mm)

A

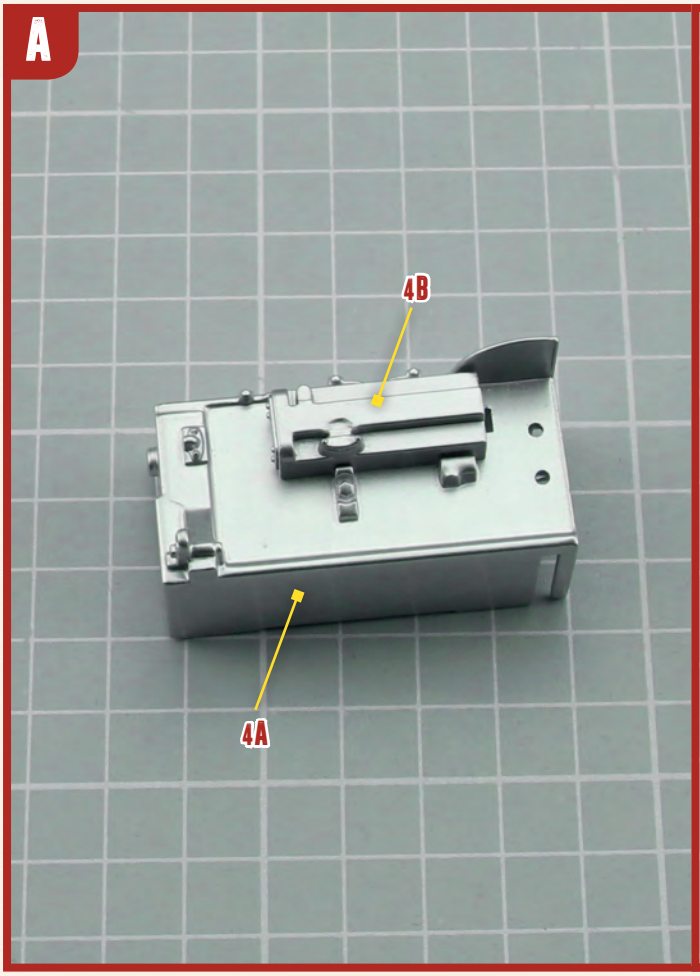

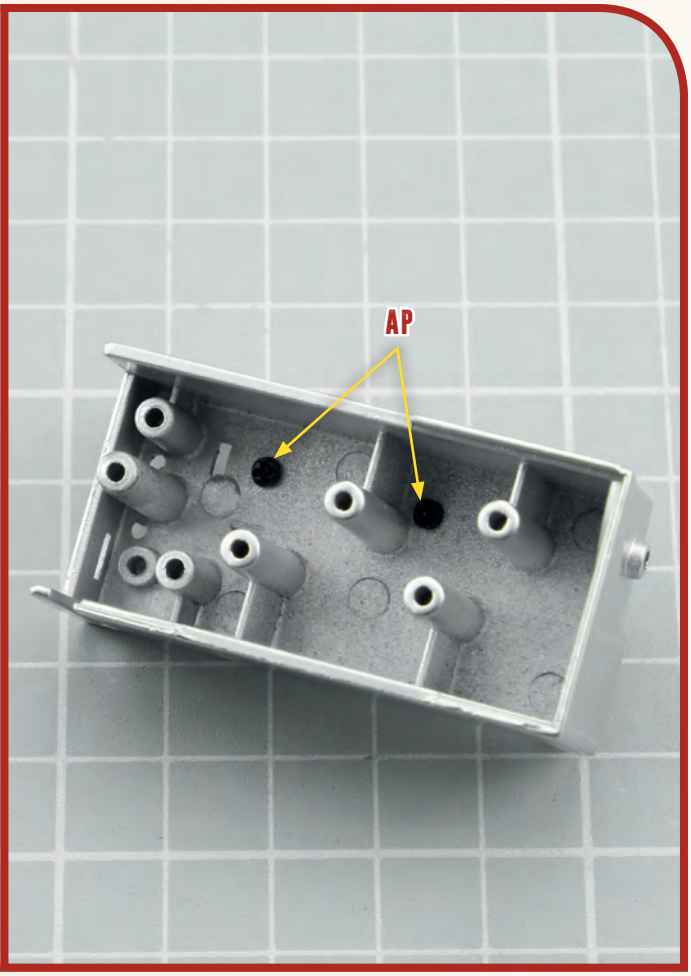

B

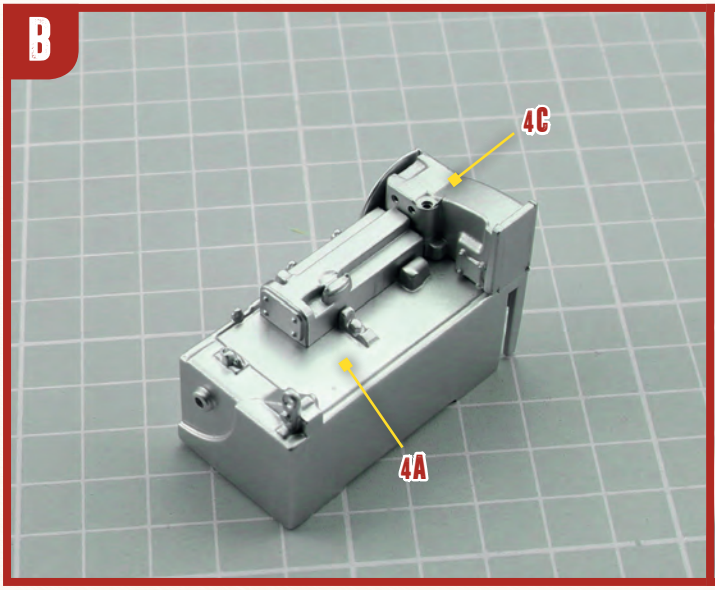

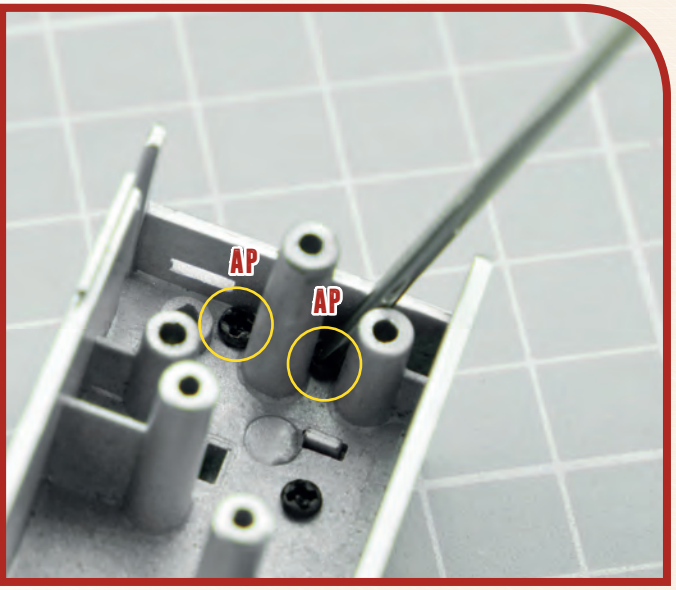

C

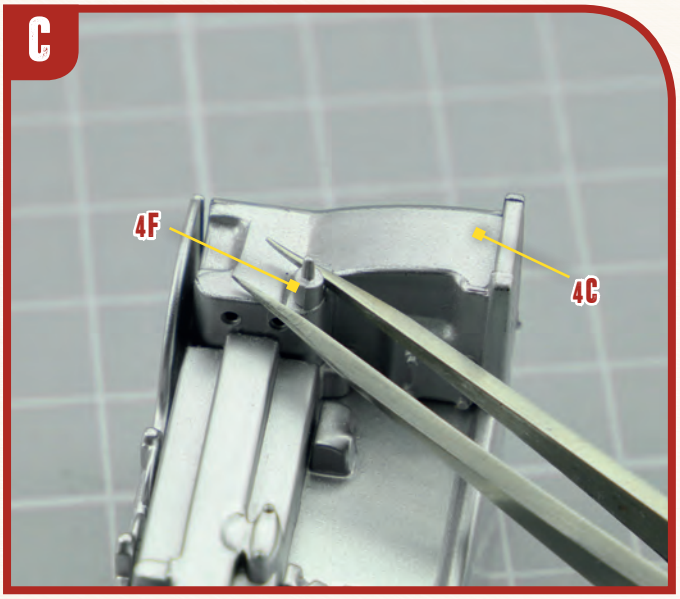

D

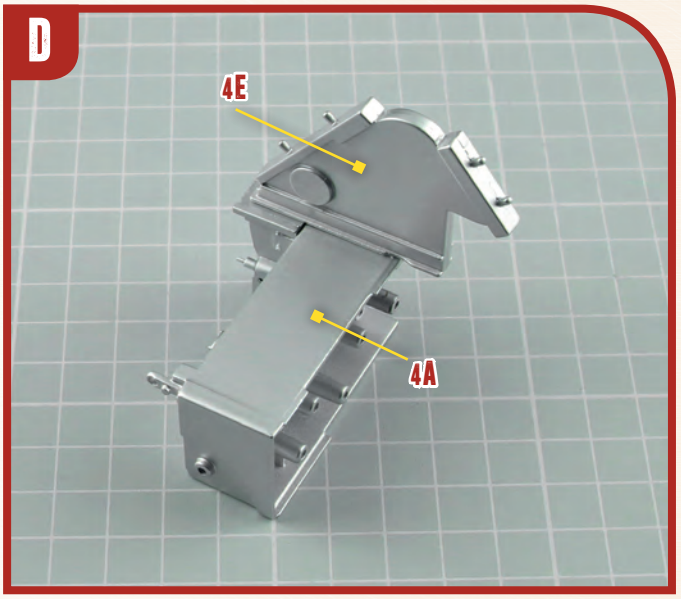

E

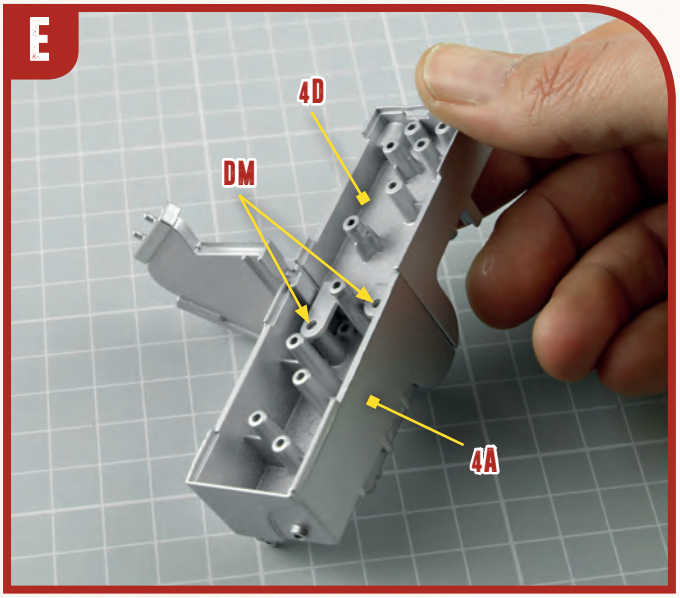

F

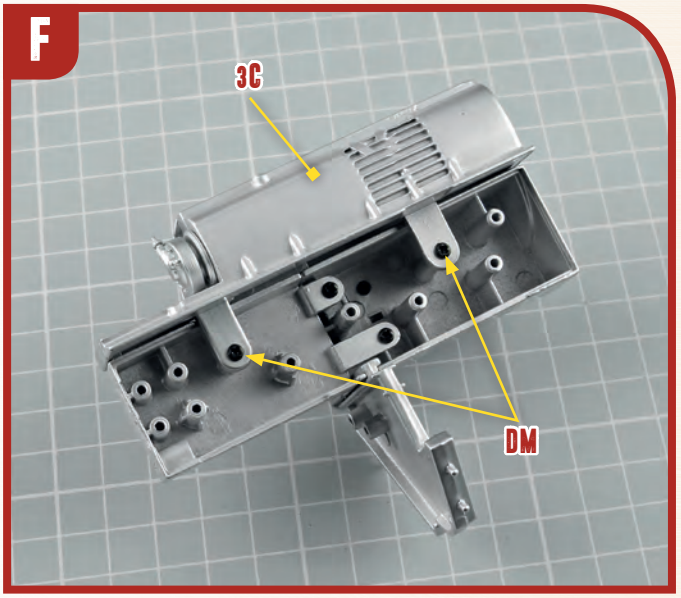

05 PARTS LIST



5A	Fuel pump body	**5E**	Joint 2	**5I**	Joint 4
5B	Joints 1 (x4)	**5F**	Fuel pump part A	**5J**	Screwdriver
5C	Pipe 1	**5G**	Fuel pump part B		
5D	Pipe 2	**5H**	Joint 3	**DM**	3 screws (2x4mm)

A

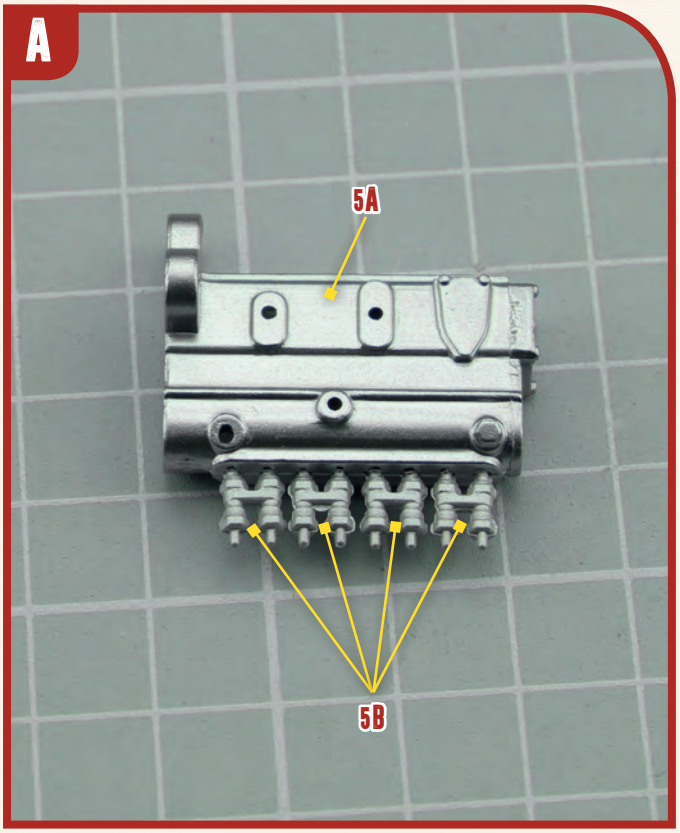

B

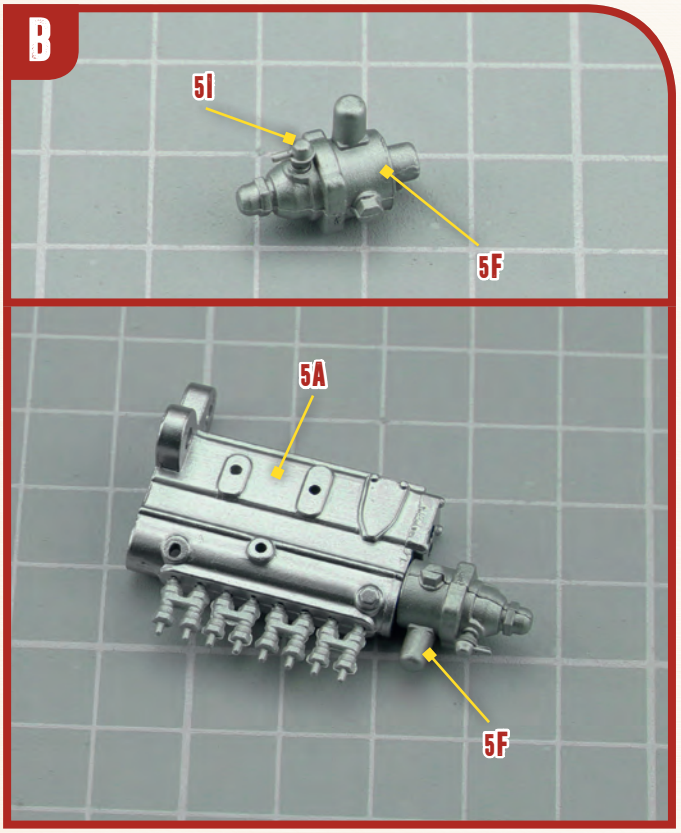

C

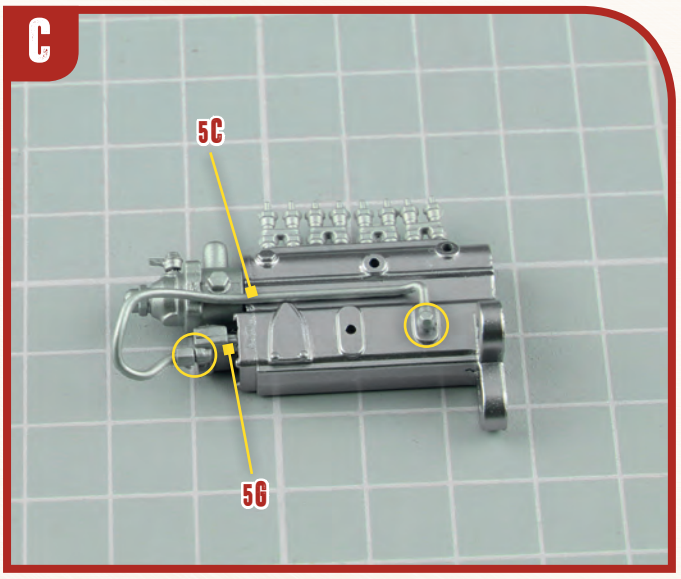

D

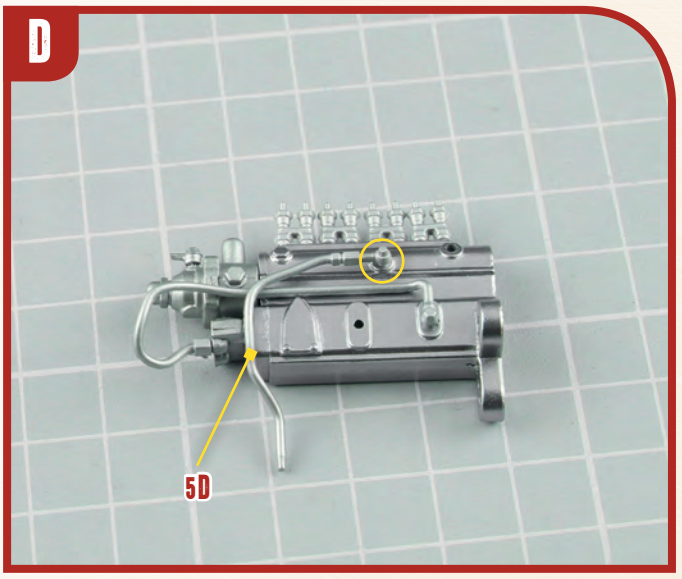

E

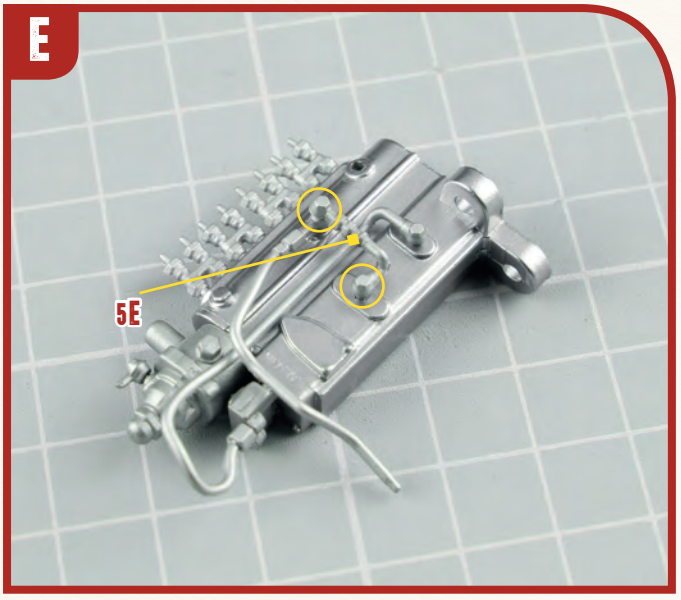

F

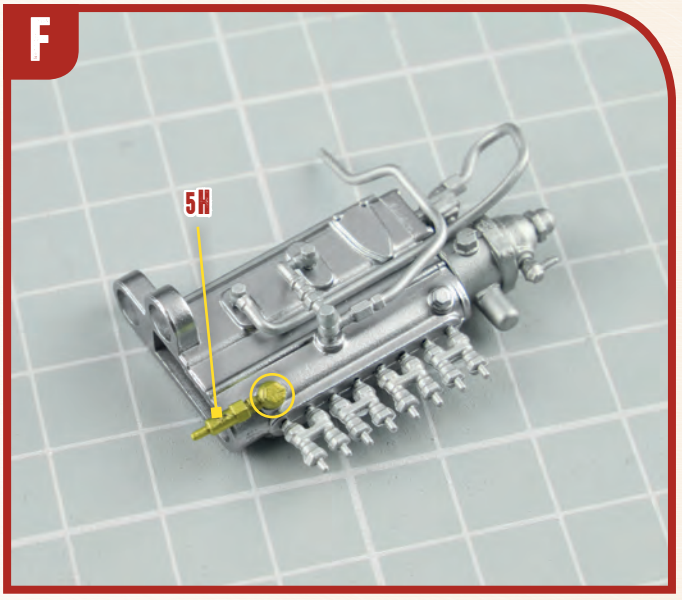

G

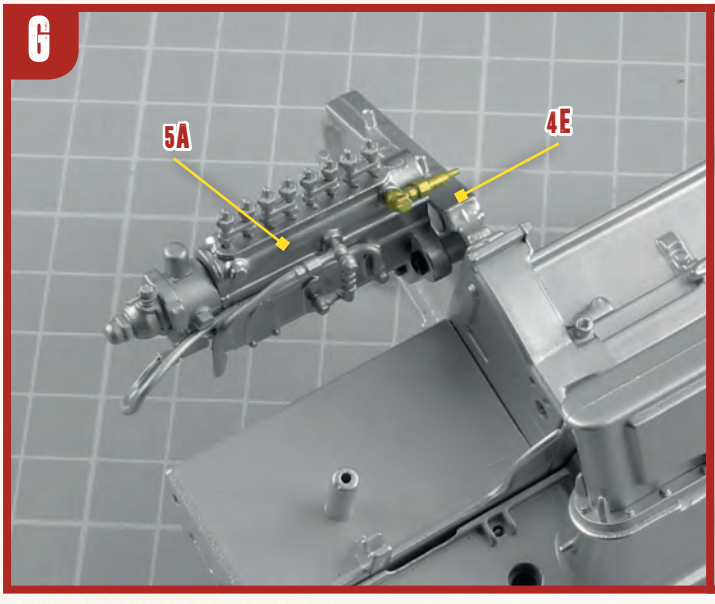

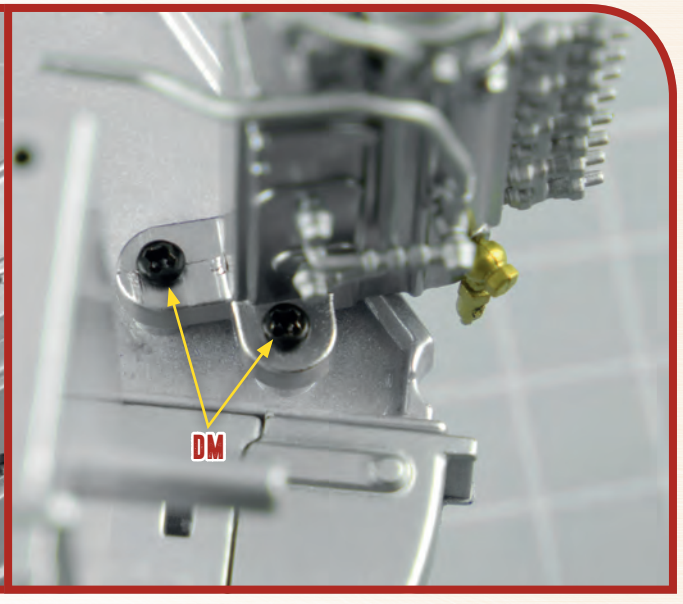

06 PARTS LIST

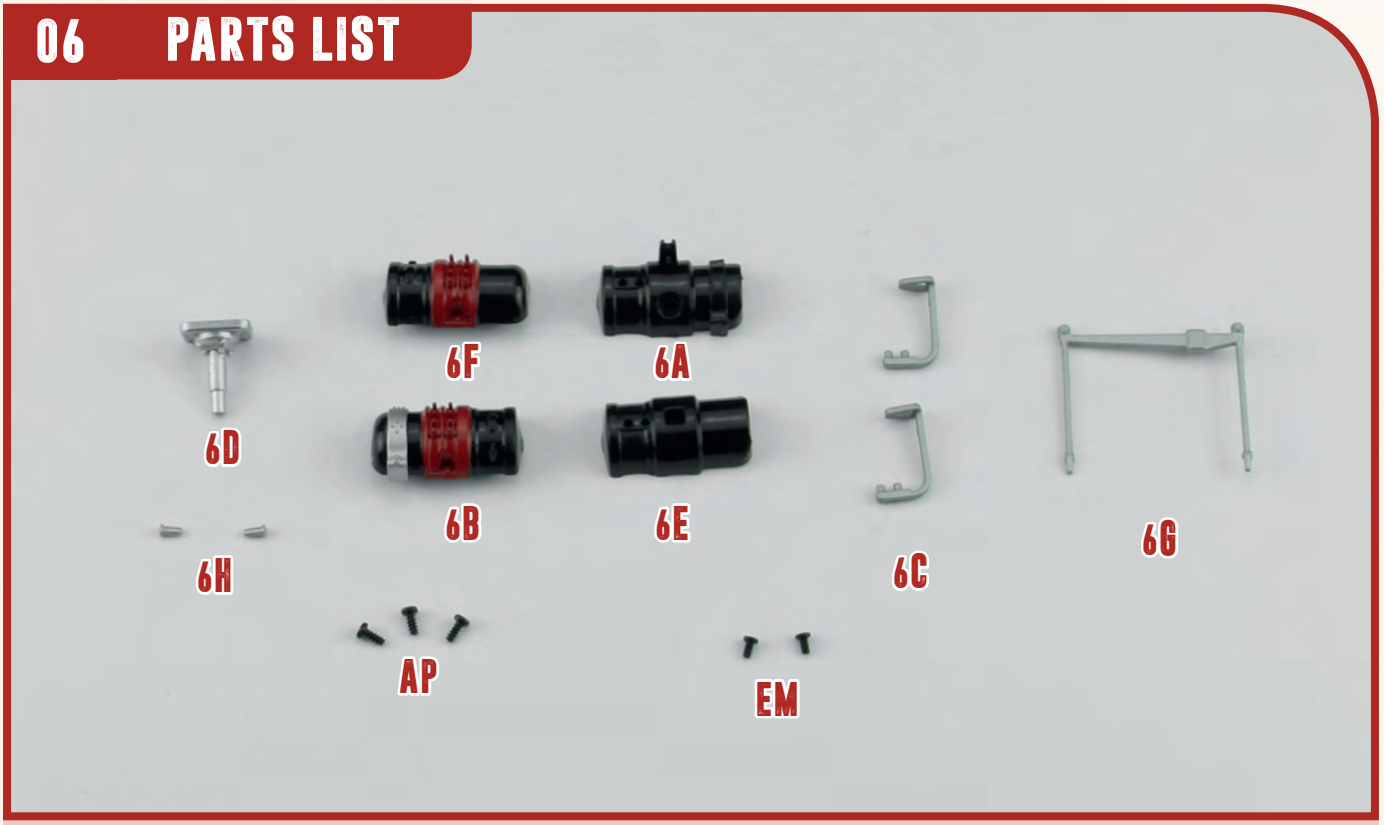

6A	Starter part A	**6E**	Starter part C	**AP**	3 screws (1.7x4mm)
6B	Starter part B	**6F**	Starter part D	**EM**	2 screws (1.5x3mm)
6C	Brackets (x2)	**6G**	Starter support		
6D	PTO shaft	**6H**	Pins (x2)		

A

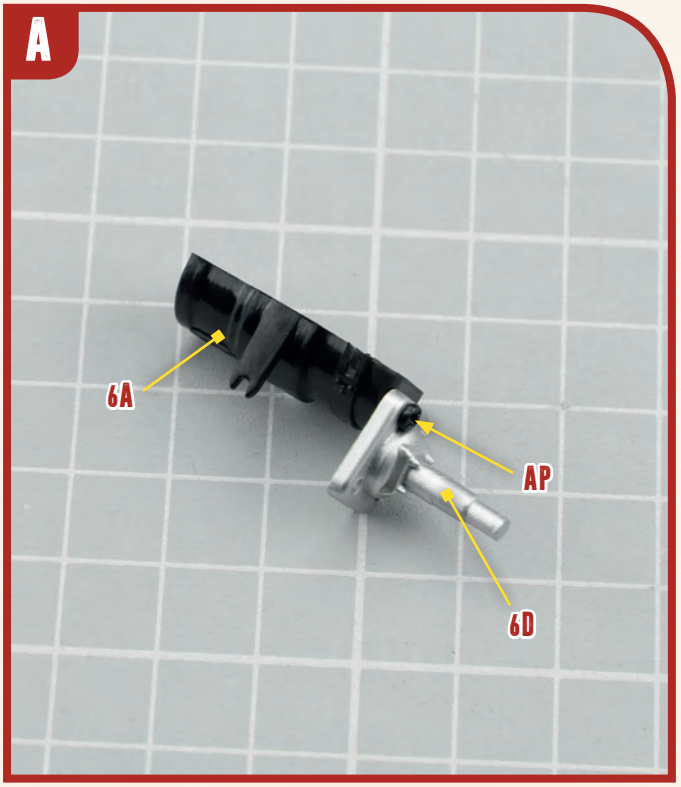

B

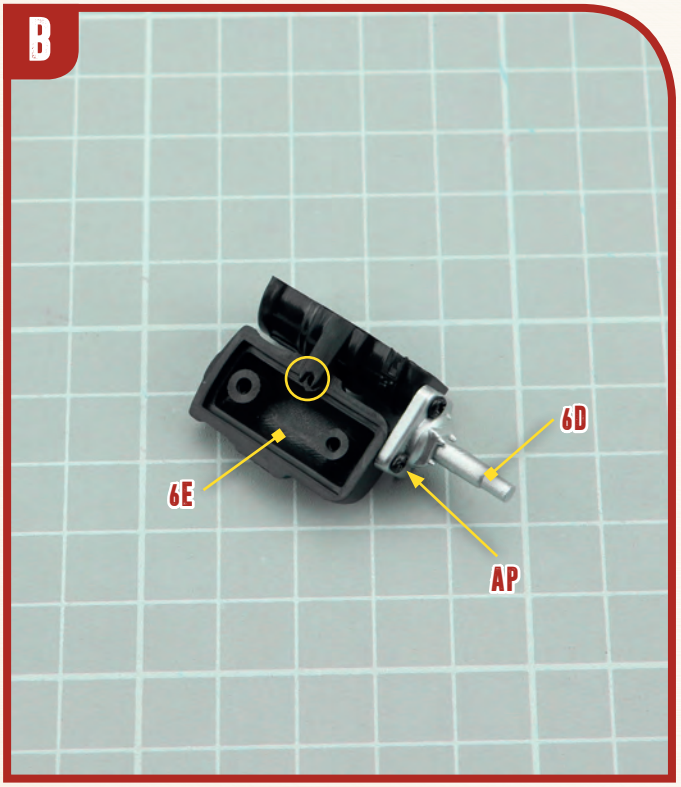

C

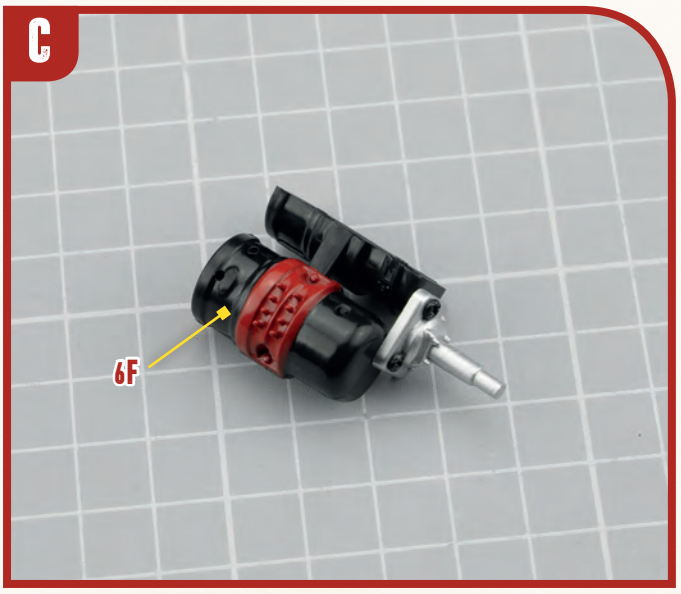

D

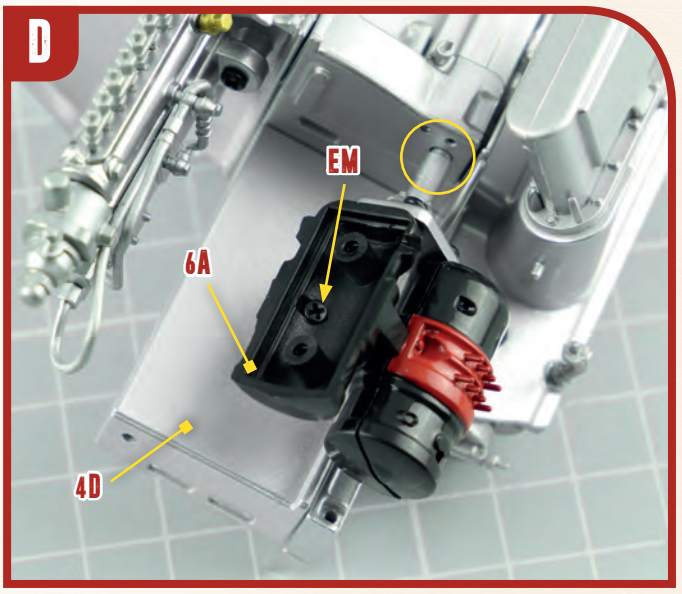

E

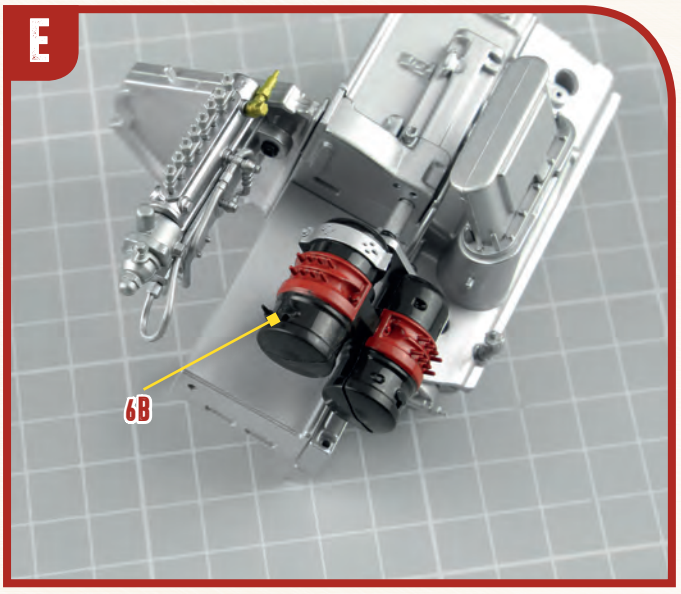

F

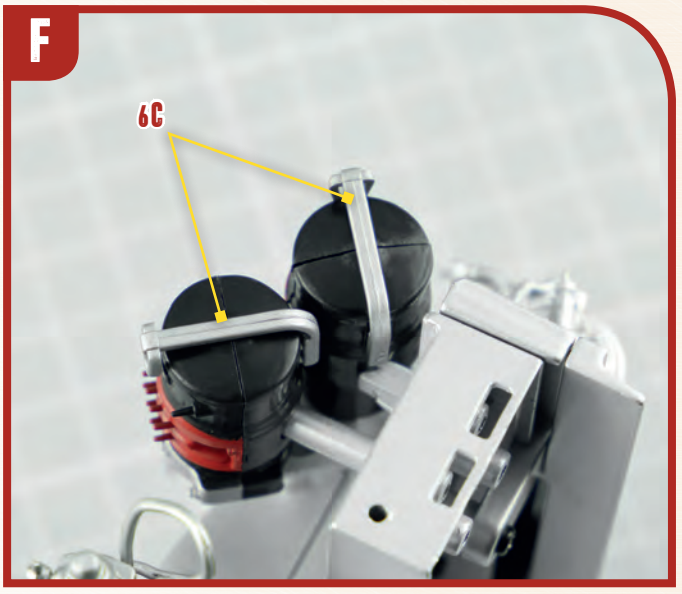

G

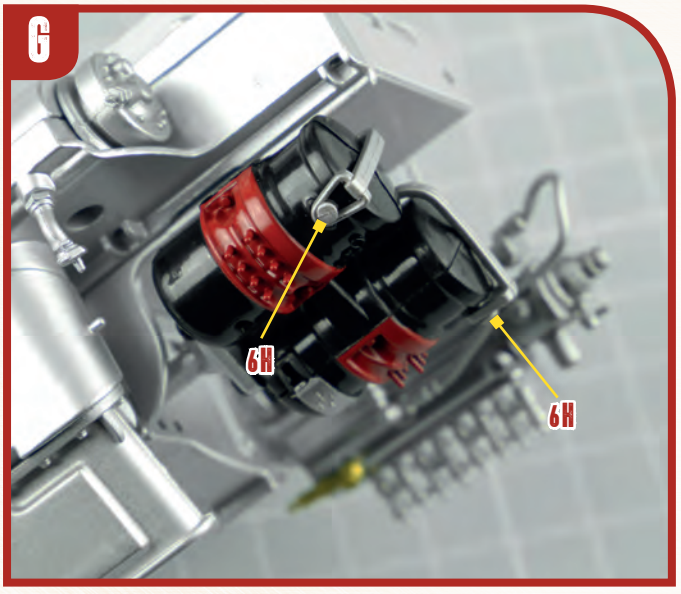

H

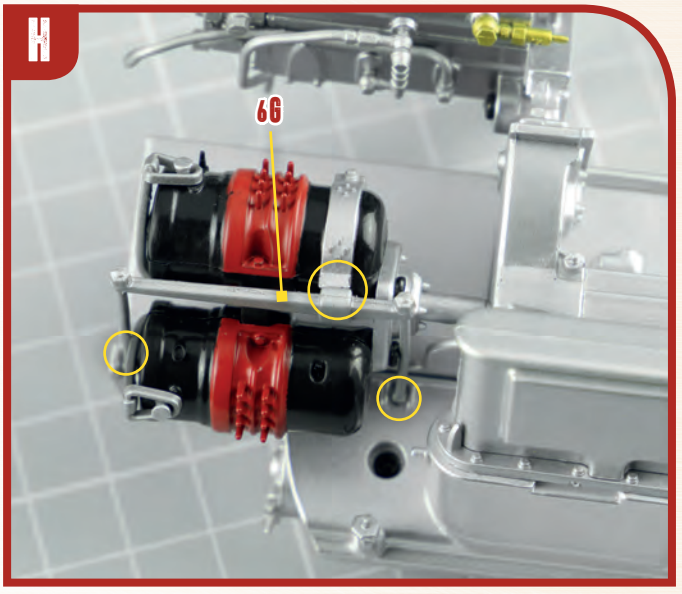

07 PARTS LIST

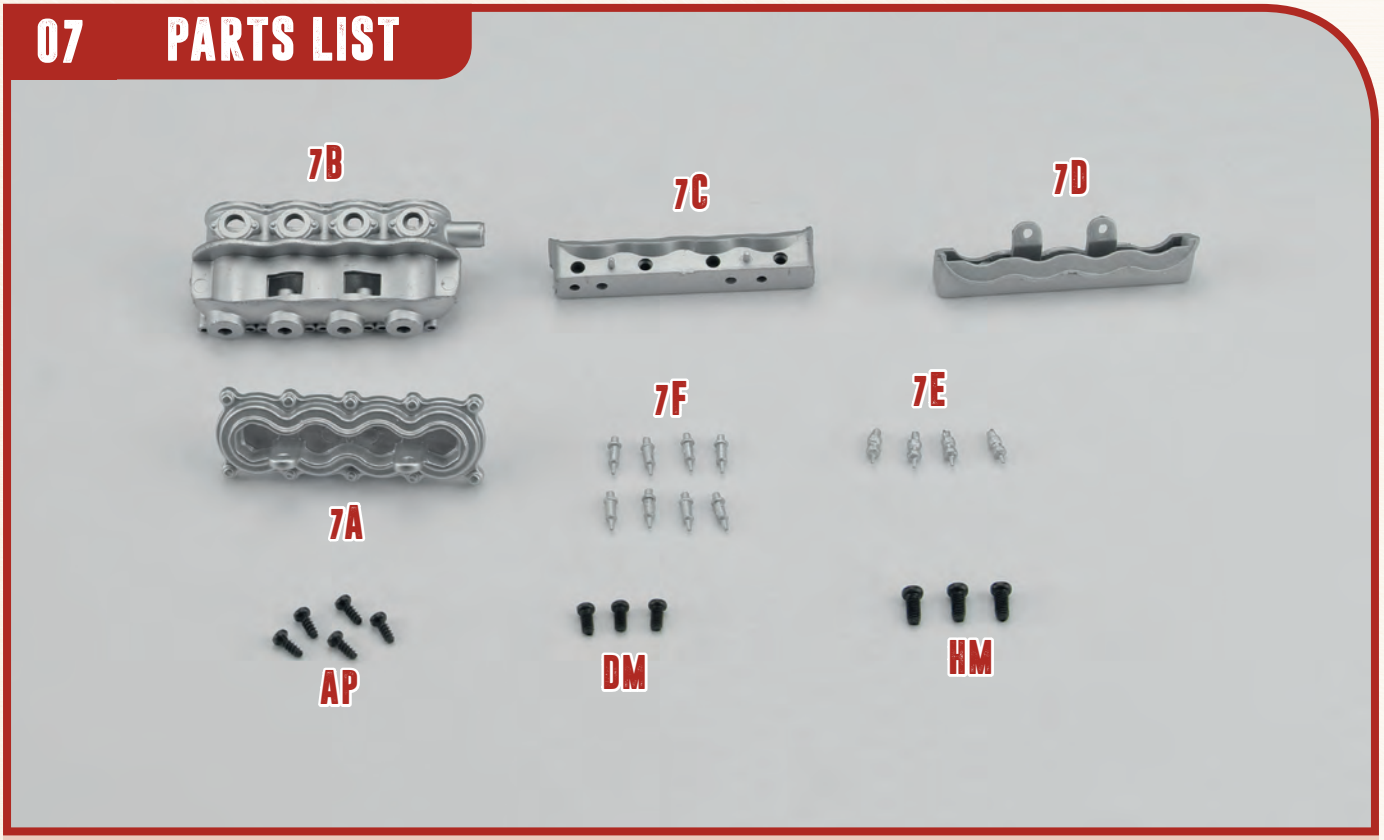

7A	Cylinder head base	**7D**	Cover 2	**AP**	5 screws (1.7x4mm)
7B	Cylinder head	**7E**	Fuel injectors (x4)	**DM**	3 screws (2x4mm)
7C	Cover 1	**7F**	Spark plugs (x8)	**HM**	3 screws (2.3x5mm)

A

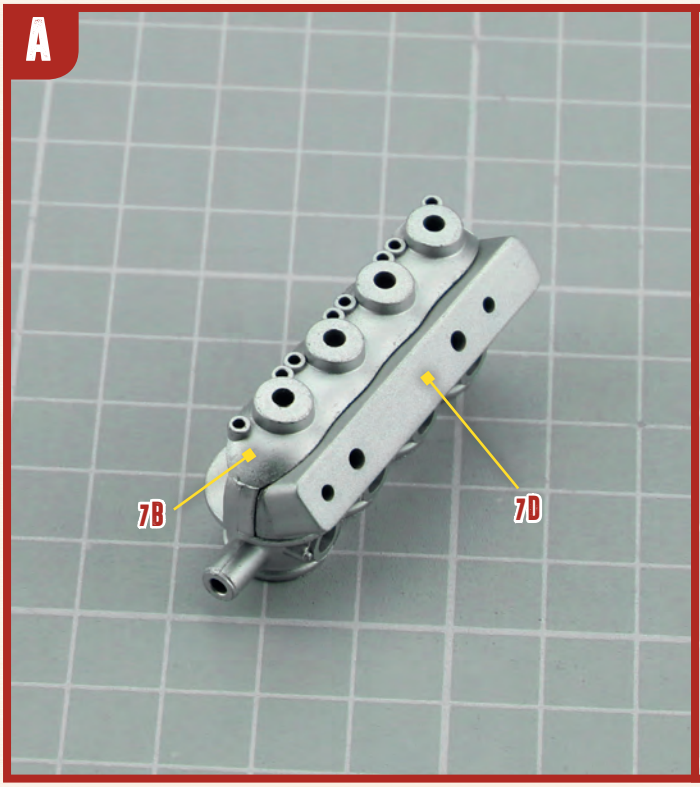

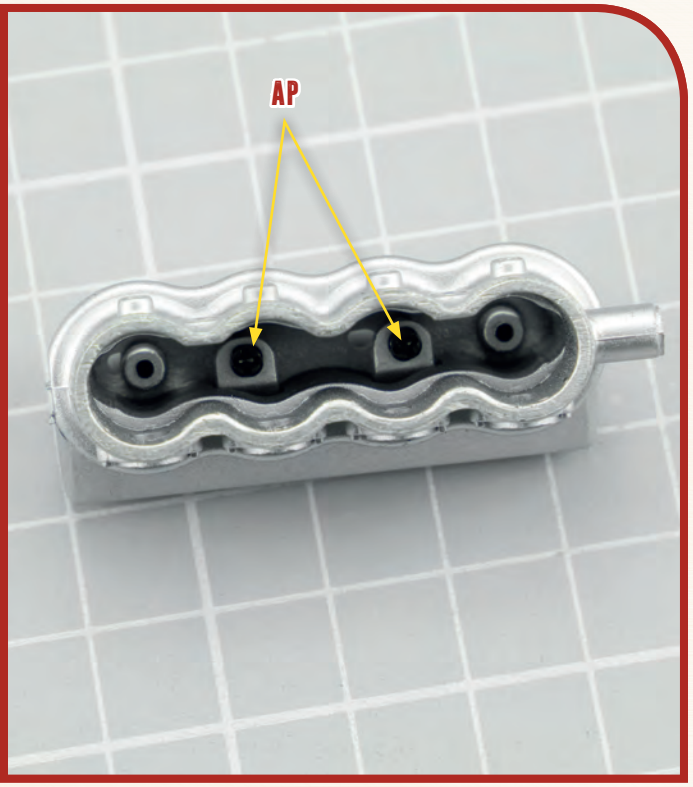

B

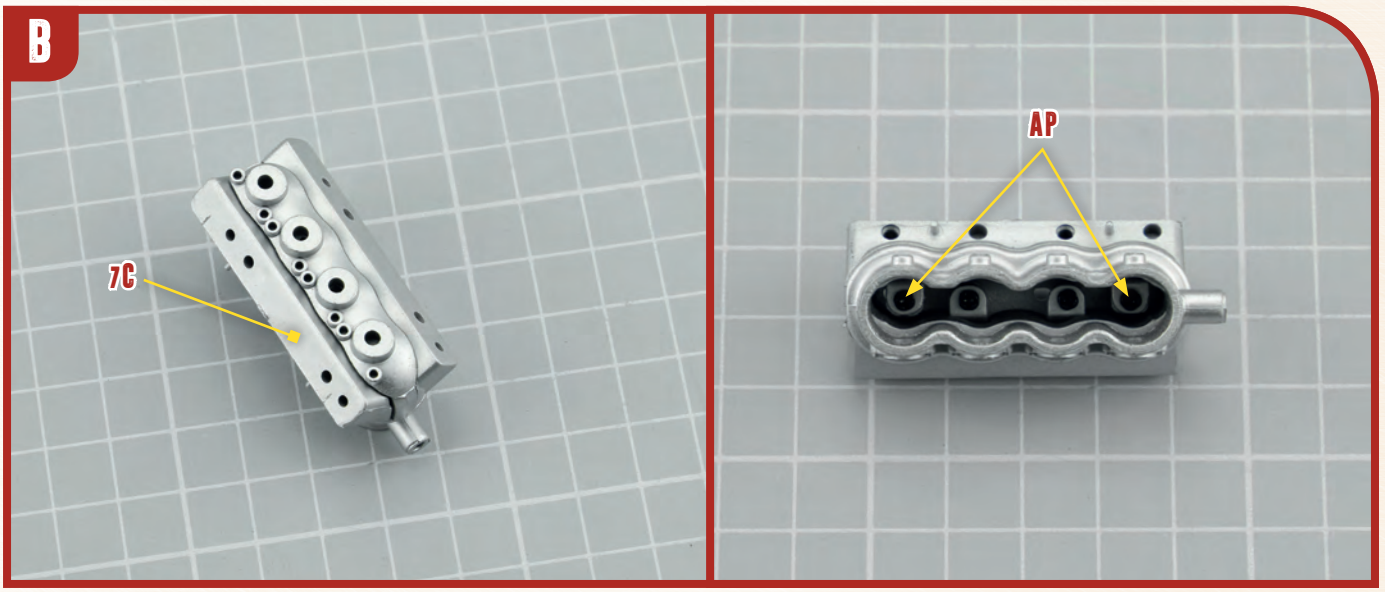

C

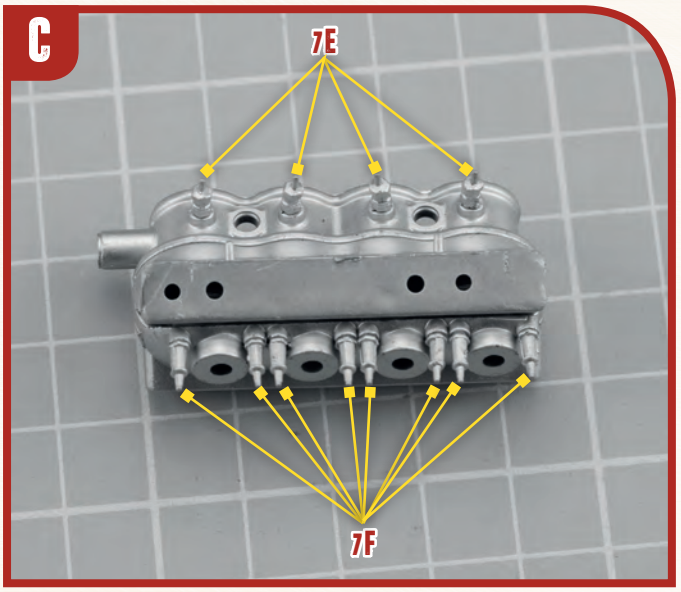

D

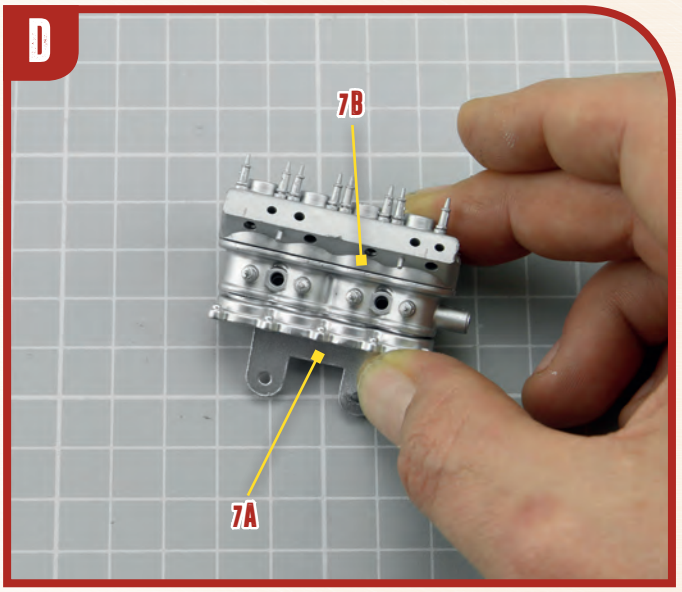

E

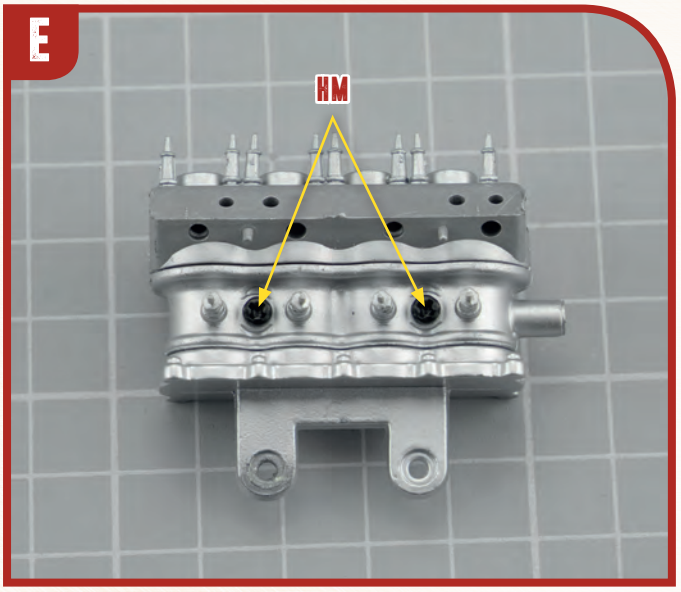

F

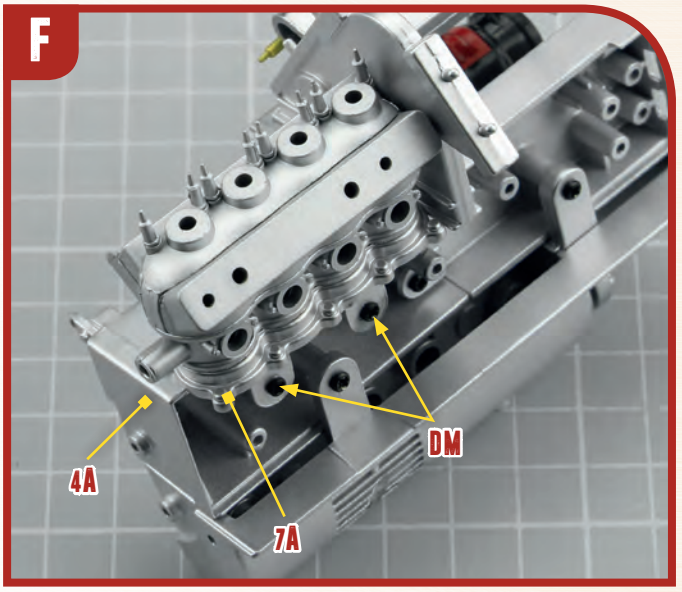

08 PARTS LIST

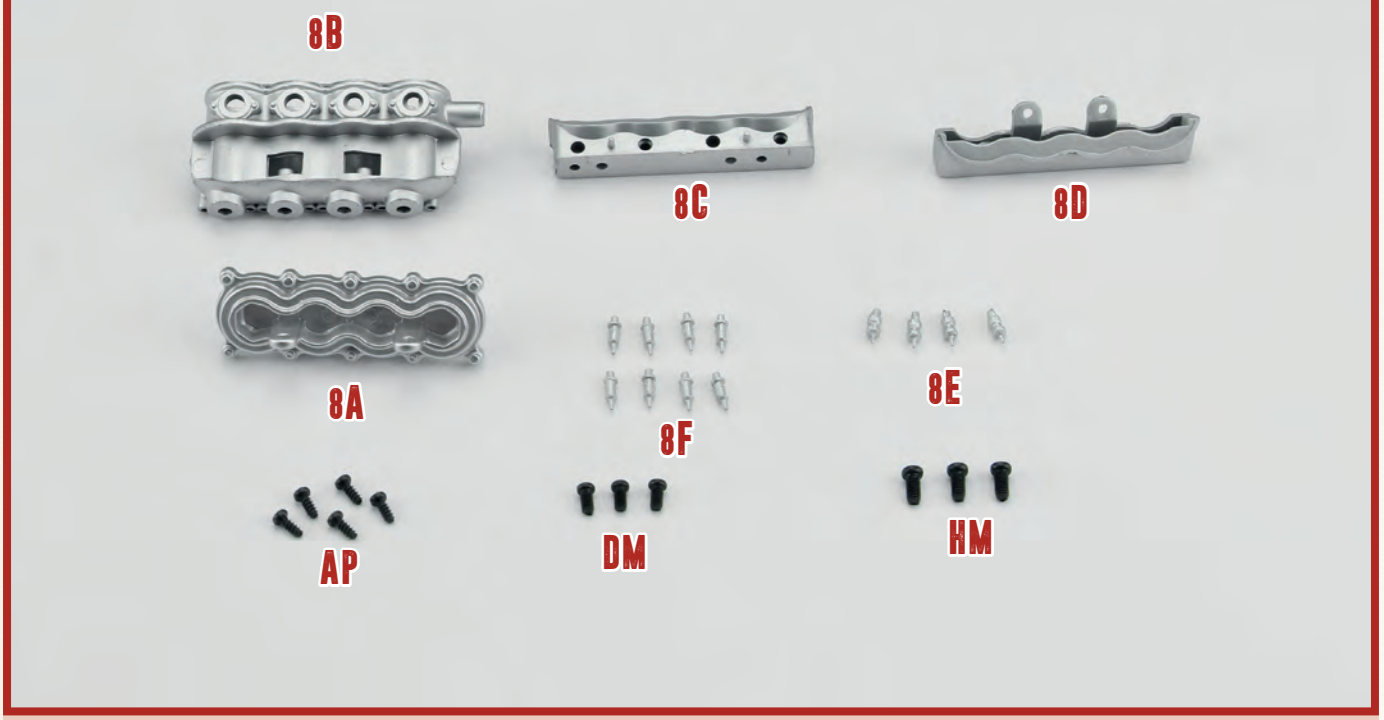

8A	Cylinder head base	**8D**	Cover 2	**AP**	5 screws (1.7x4mm)
8B	Cylinder head	**8E**	Fuel injectors (x4)	**DM**	3 screws (2x4mm)
8C	Cover 1	**8F**	Spark plugs (x8)	**HM**	3 screws (2.3x5mm)

A

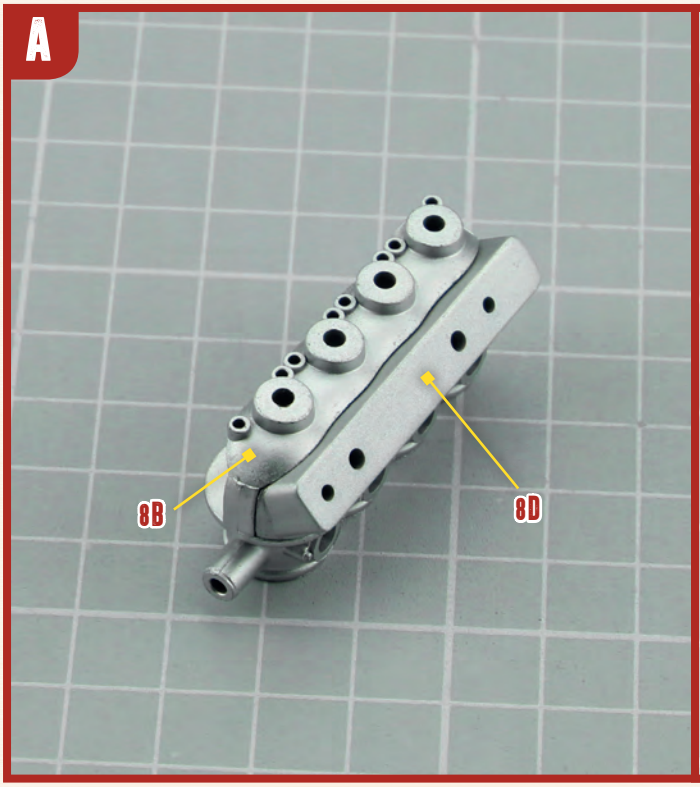

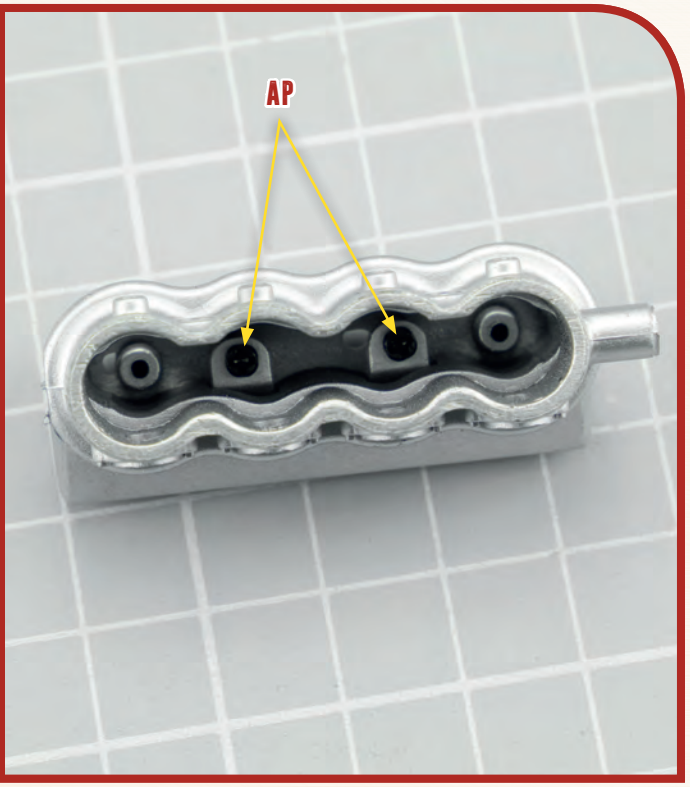

B

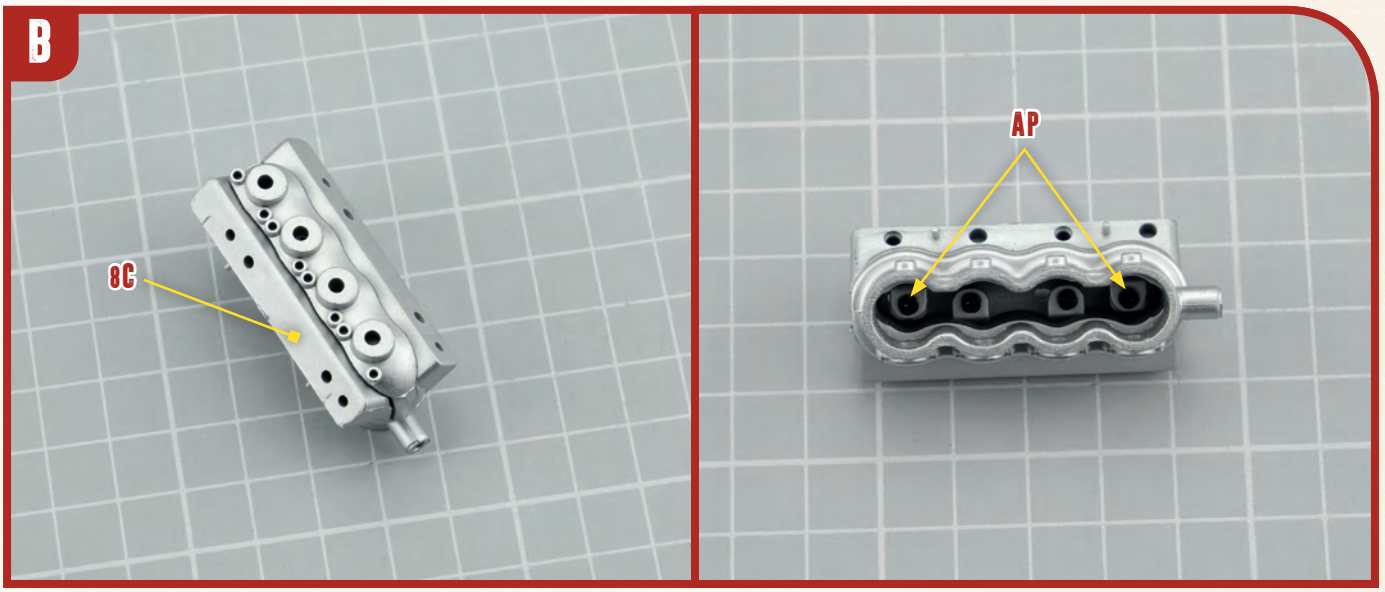

C

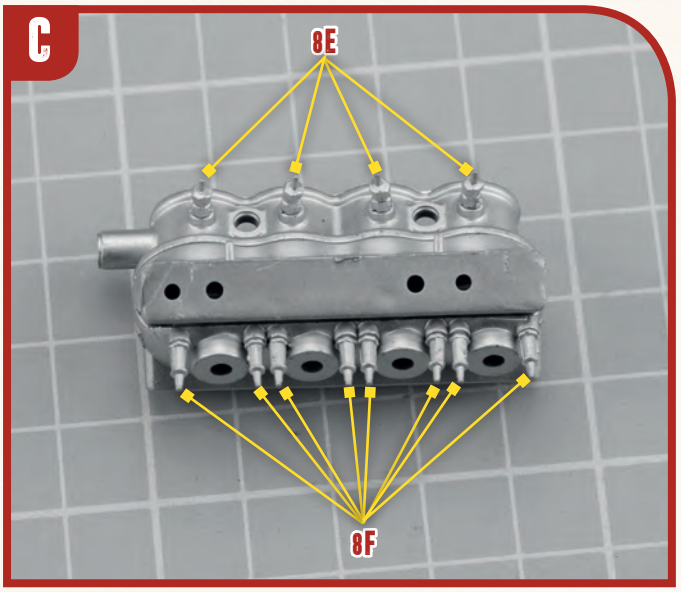

D

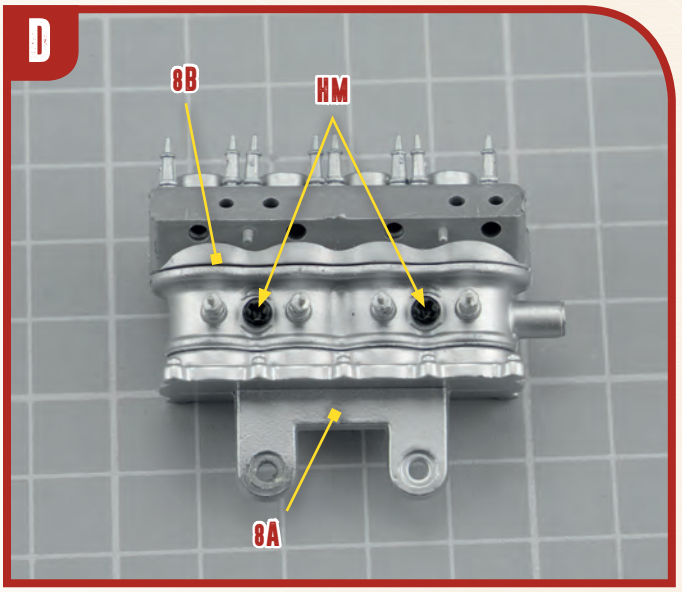

E

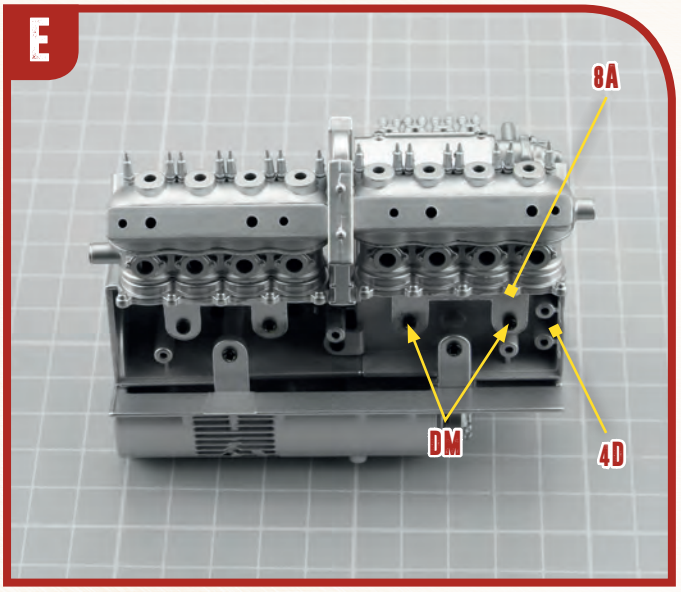

F

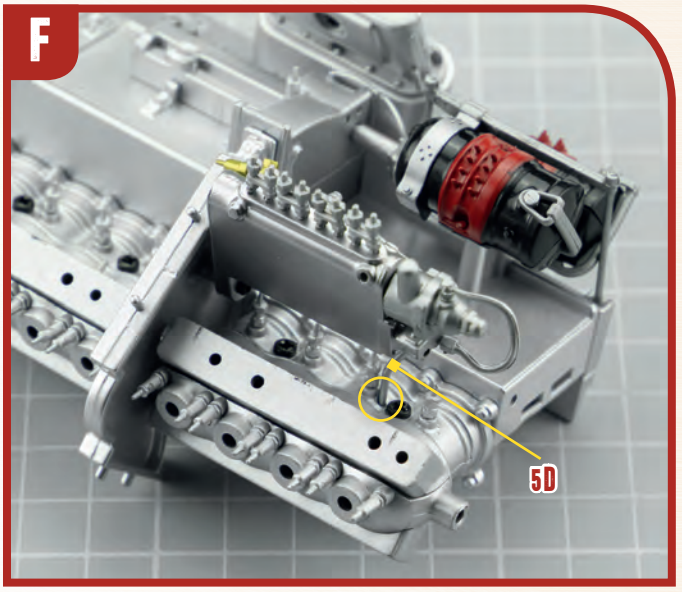

09 PARTS LIST

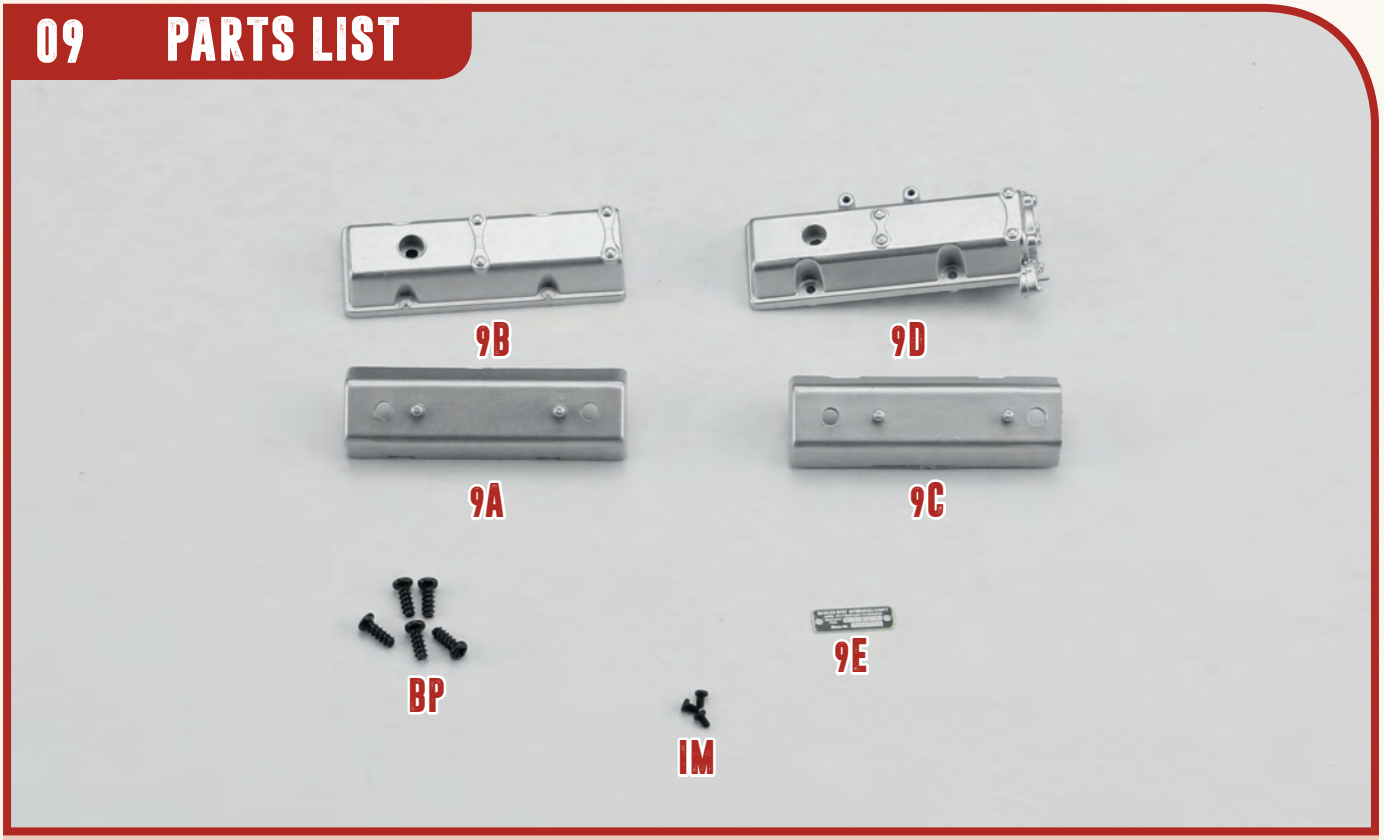

9A	Valves cover base 1	**9D**	Valves cover 2	**BP**	5 screws (2x5mm)
9B	Valves cover 1	**9E**	Plate	**IM**	3 screws (1.2x2mm)
9C	Valves cover base 2				

A

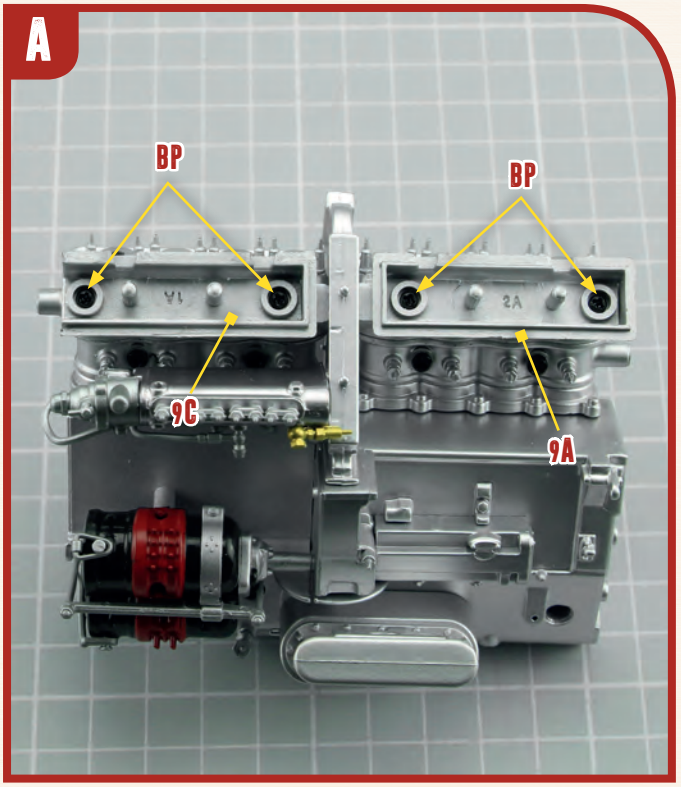

B

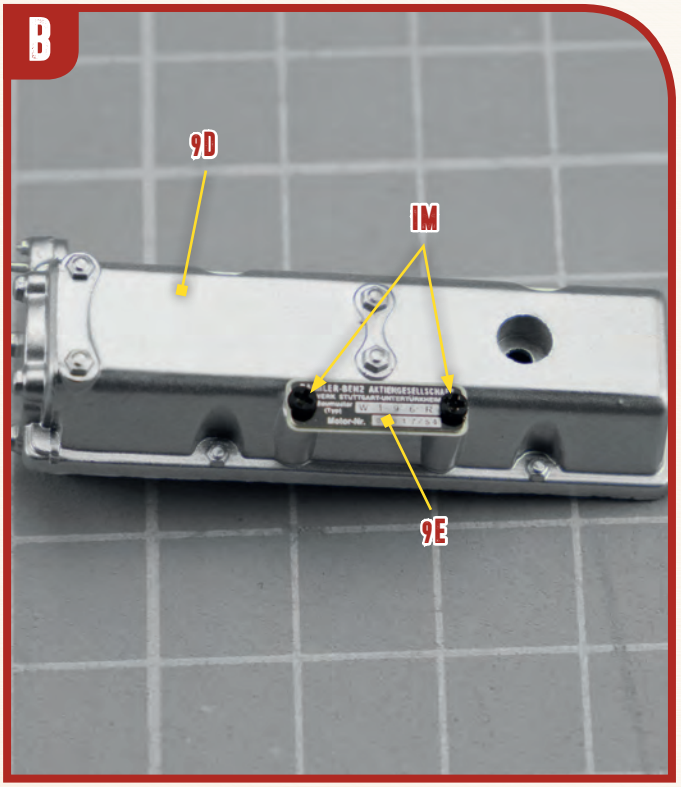

10 PARTS LIST

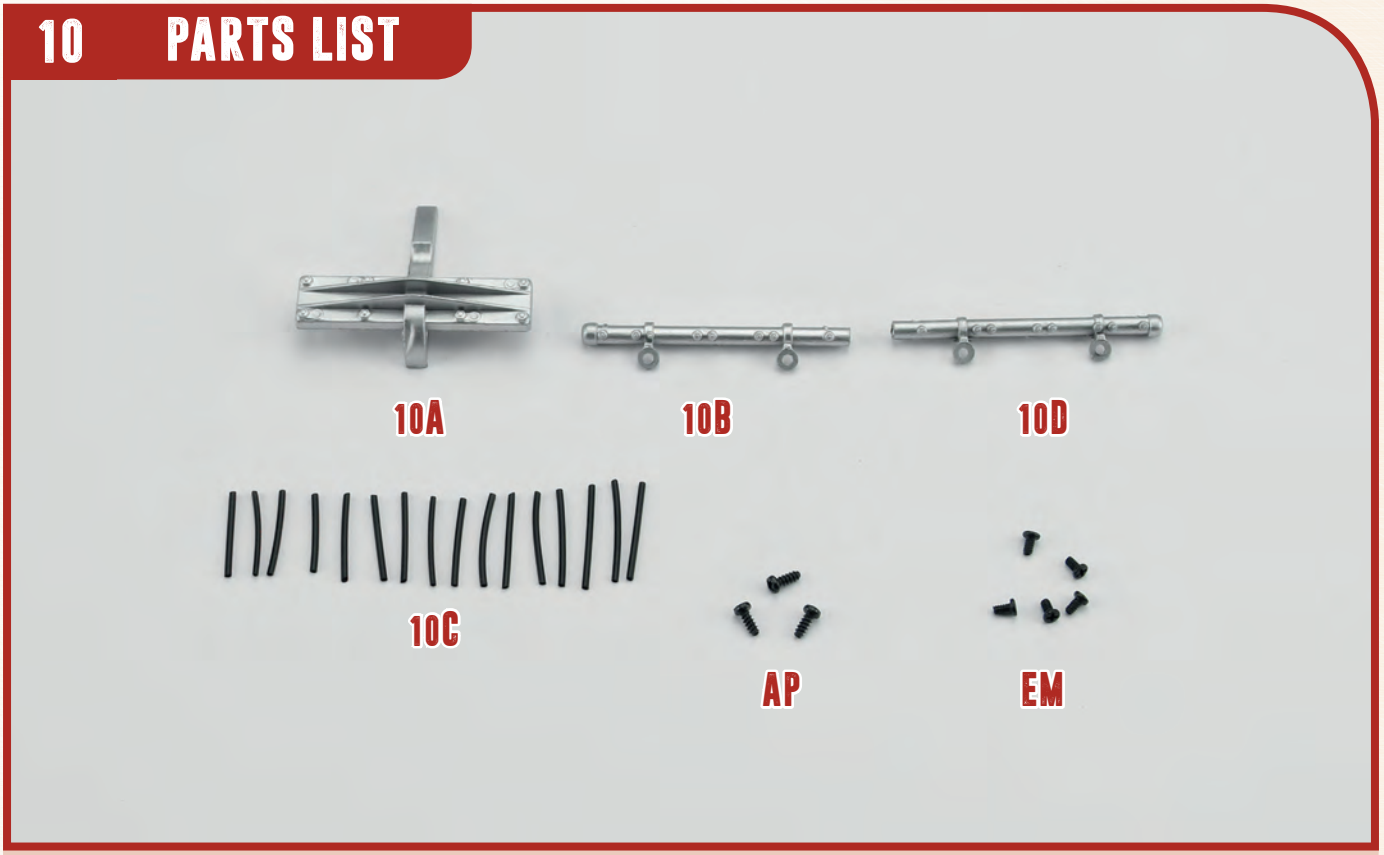

10A Valves covers bracket 1
10B Wires cover 1
10C Wires (x16)
10C Wires cover 2
AP 3 screws (1.7x4mm)
EM 5 screws (1.5x3mm)

A

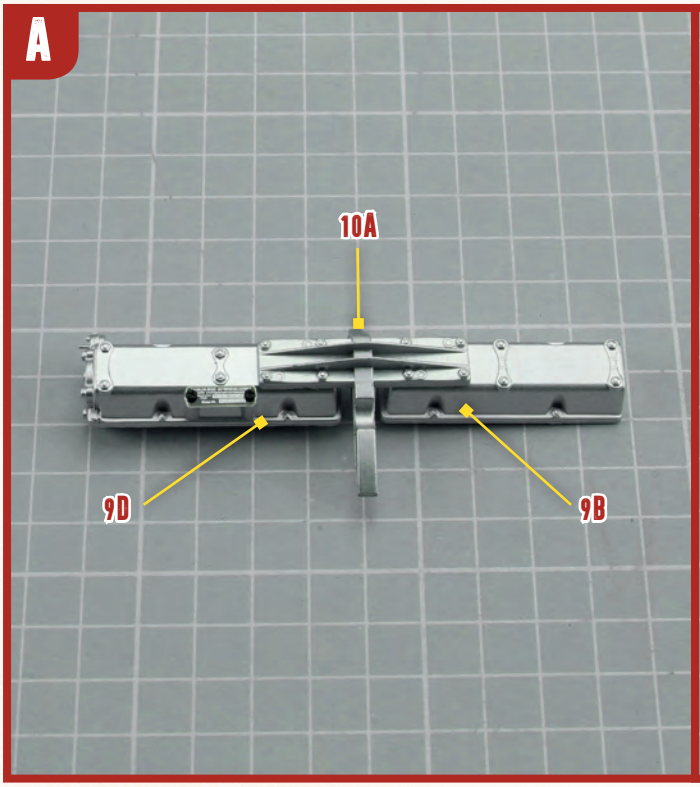

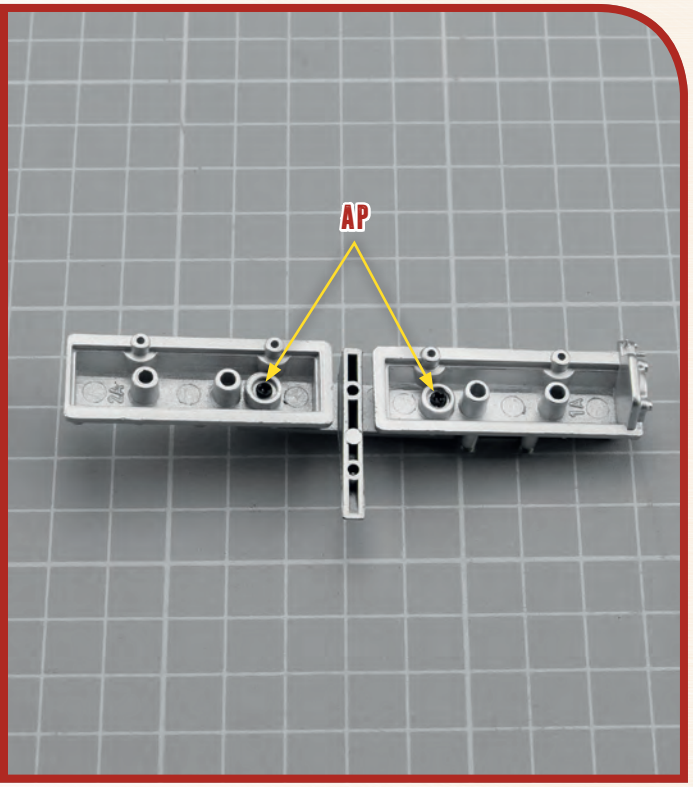

B

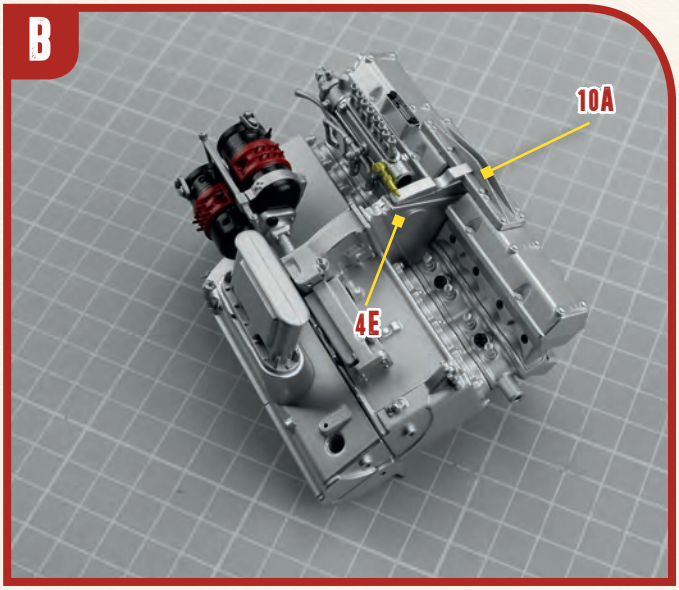

C

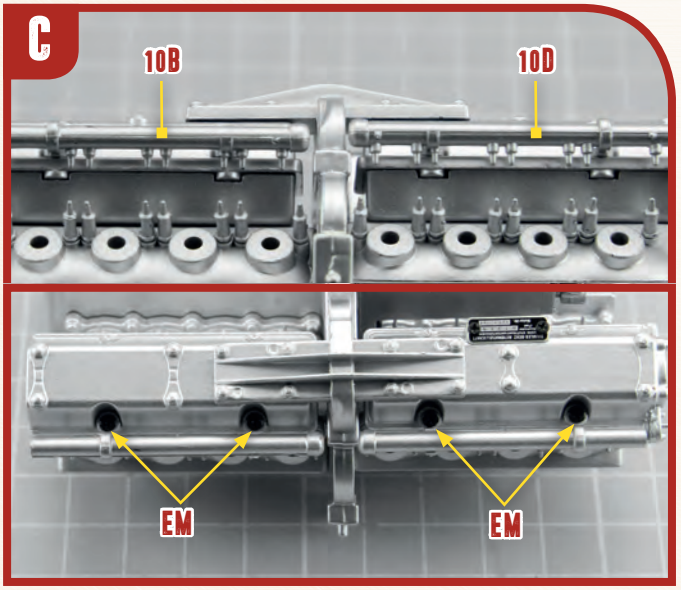

D

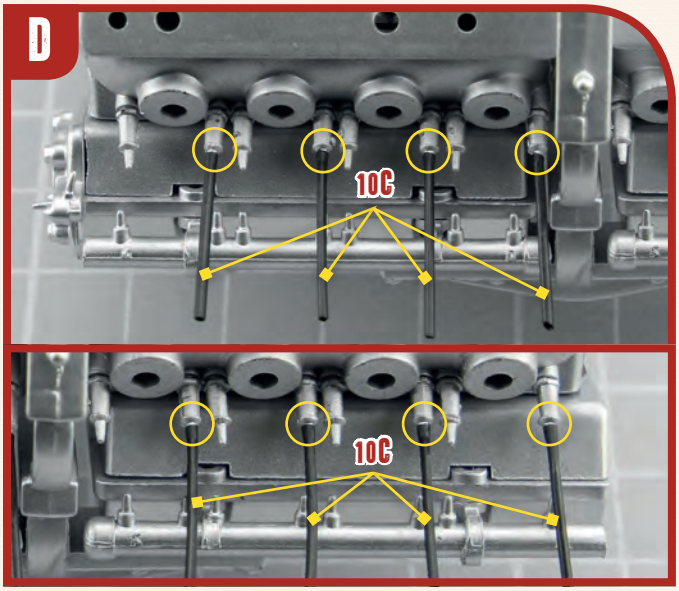

E

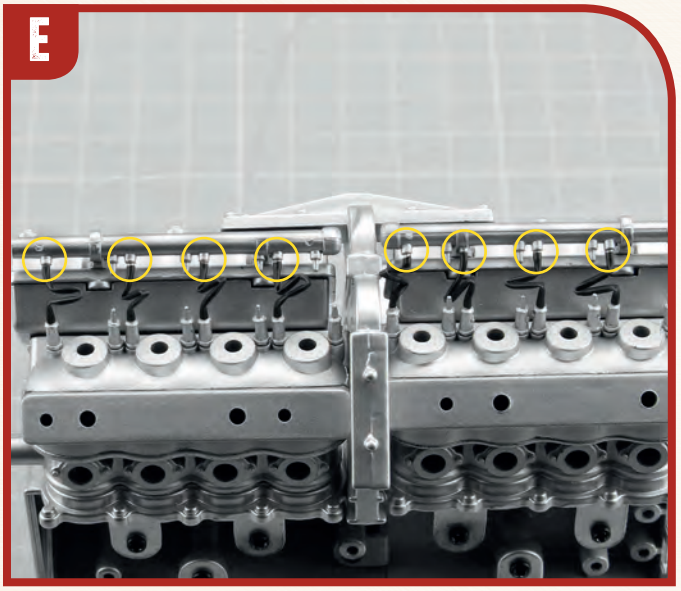

F

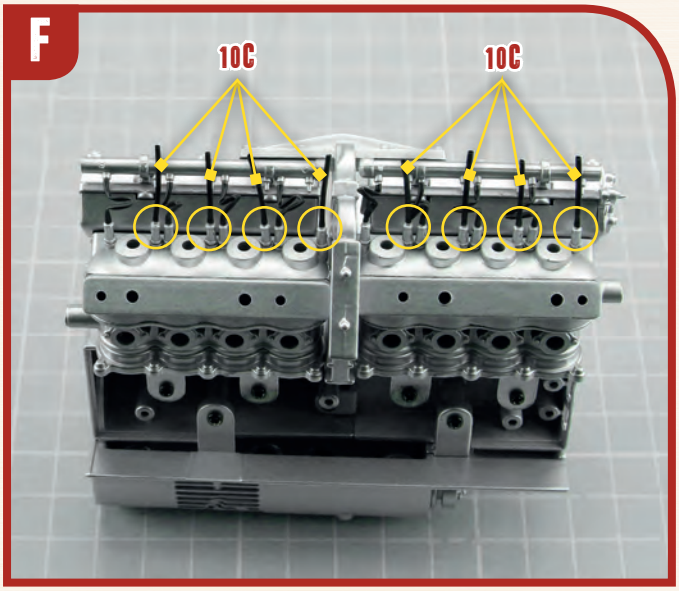

G

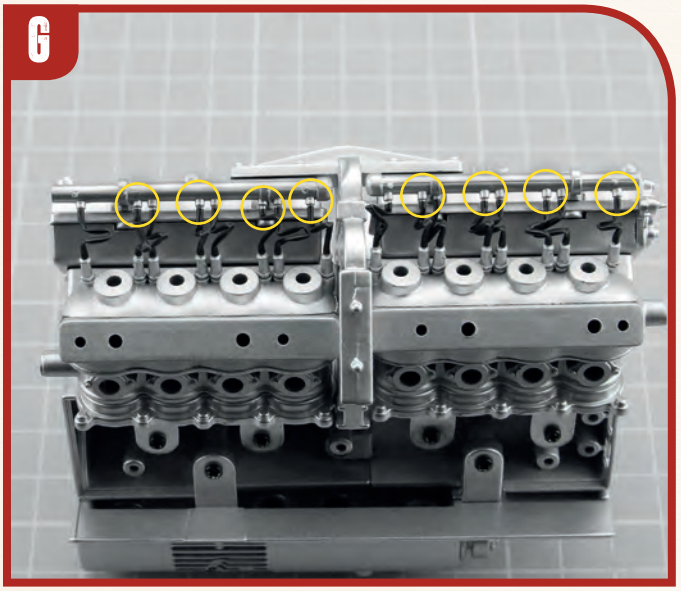

11 PARTS LIST

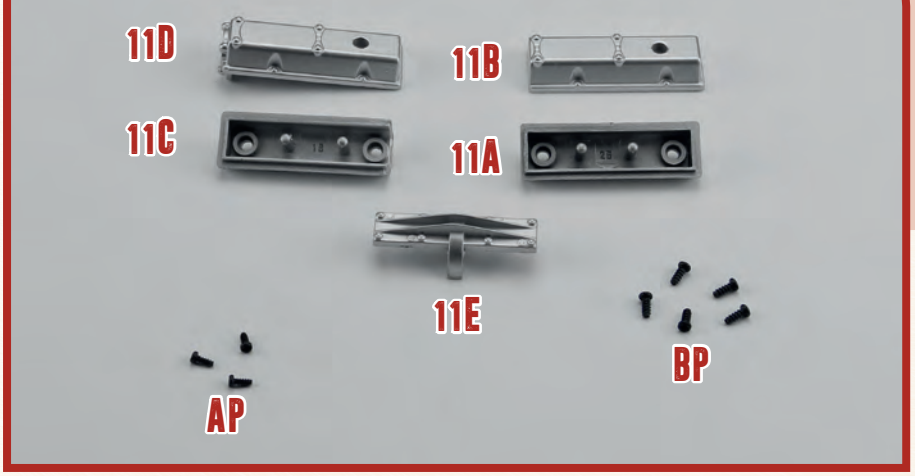

11A	Valves cover base 3
11B	Valves cover 3
11C	Valves cover base 4
11D	Valves cover 4
11E	Valves cover bracket 2
AP	3 screws (1.7x4mm)
BP	5 screws (2x5mm)

A

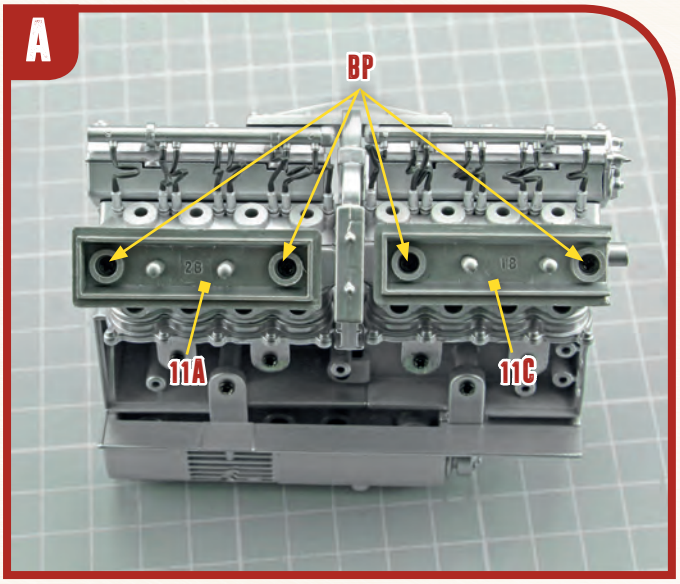

B

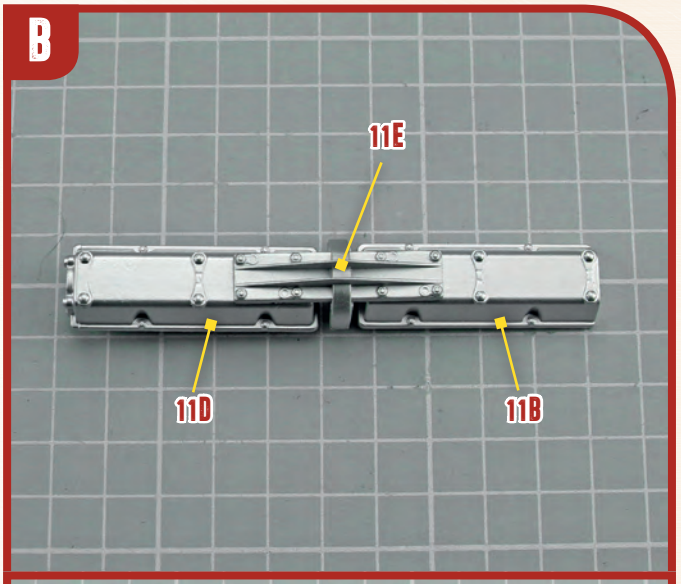

C

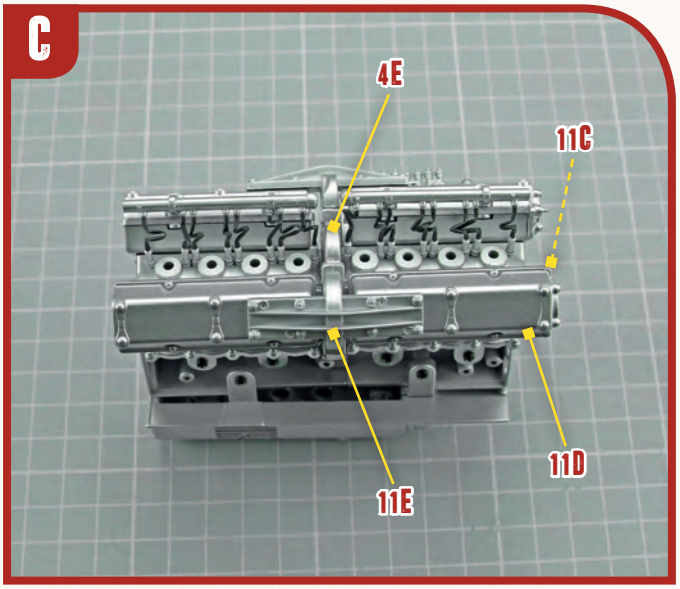

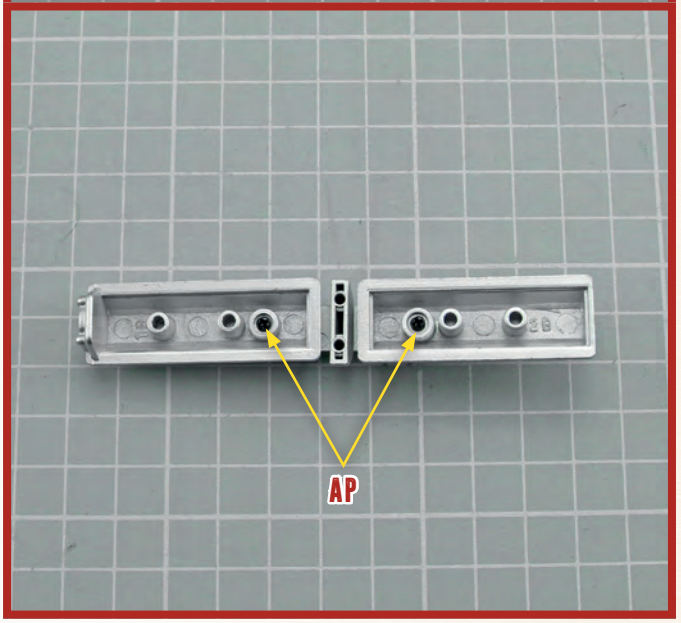

12 PARTS LIST

REGULAR ASSEMBLY

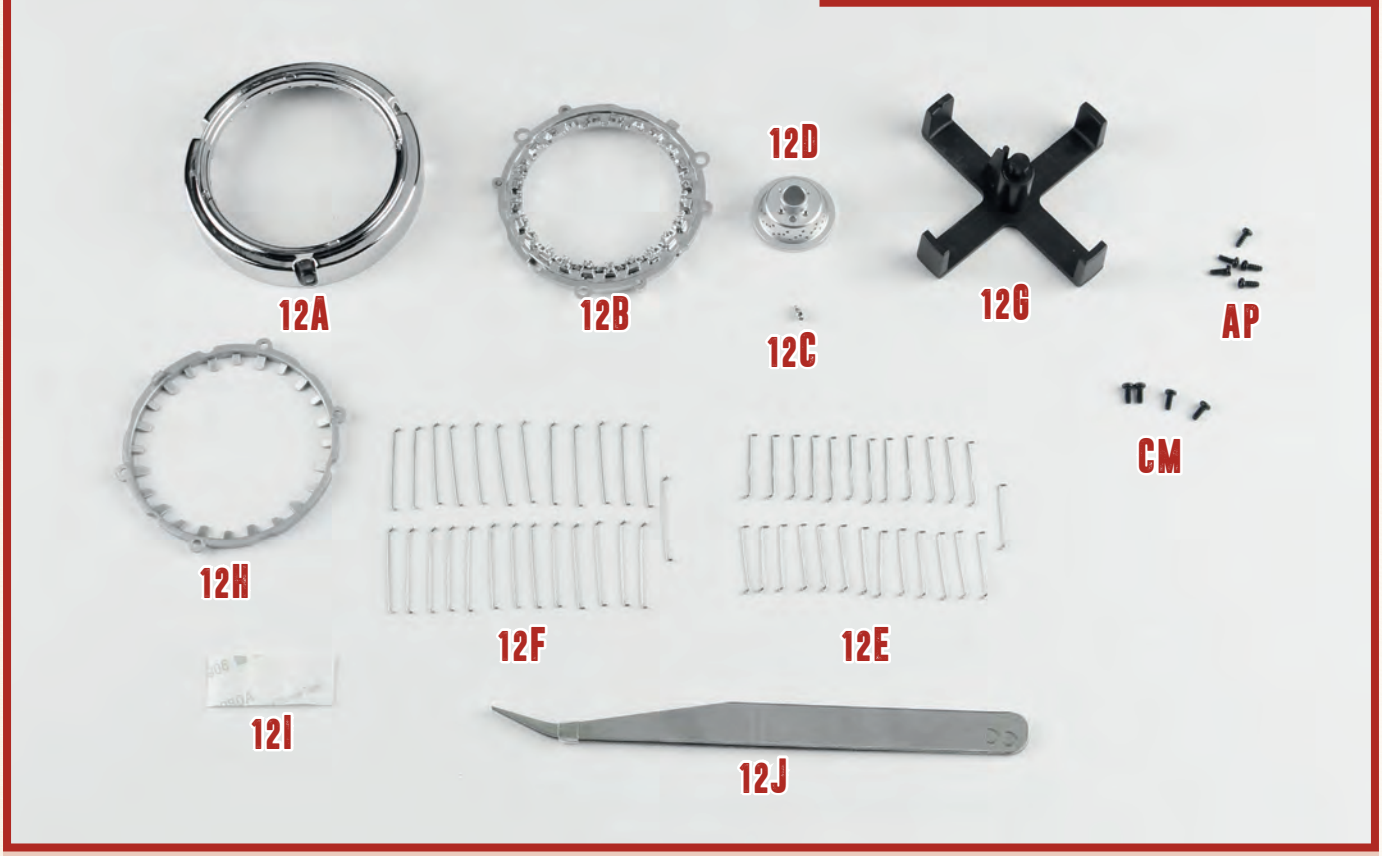

12A Outer rim
12B Central ring 1
12C Inflation valve
12D Hub 1
12E Spokes 1
12F Spokes 2
12G Jig
12H Central ring 2
12I Double-sided tape
12J Tweezers
AP 5 screws (1.7x4mm)
CM 4 screws (1.7x4mm)

A

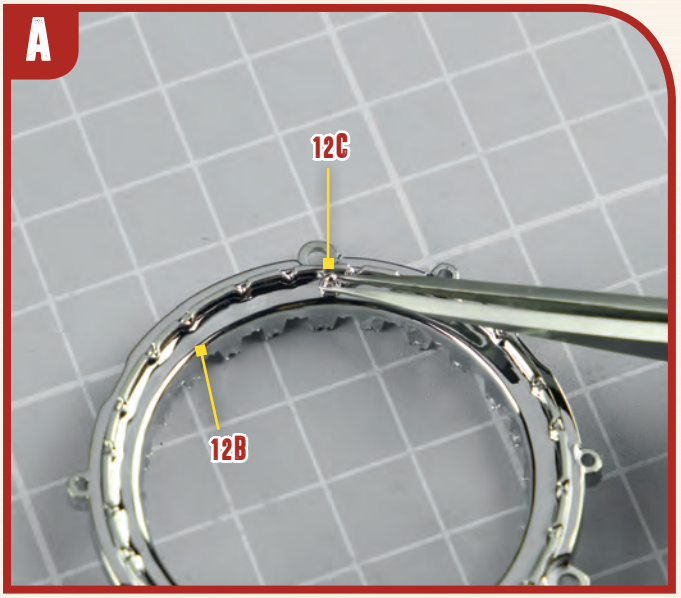

B

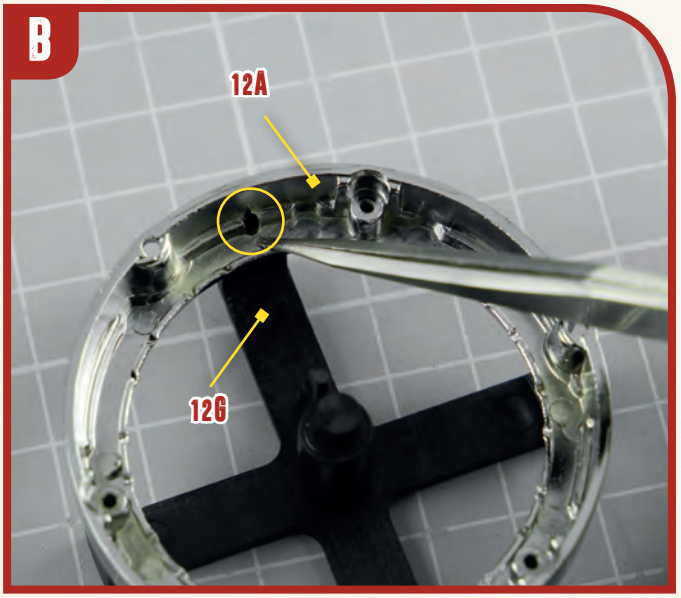

C

Apply 24 pieces of double-sided tape 12I to 12A's inner profile and tear off their top sheets.

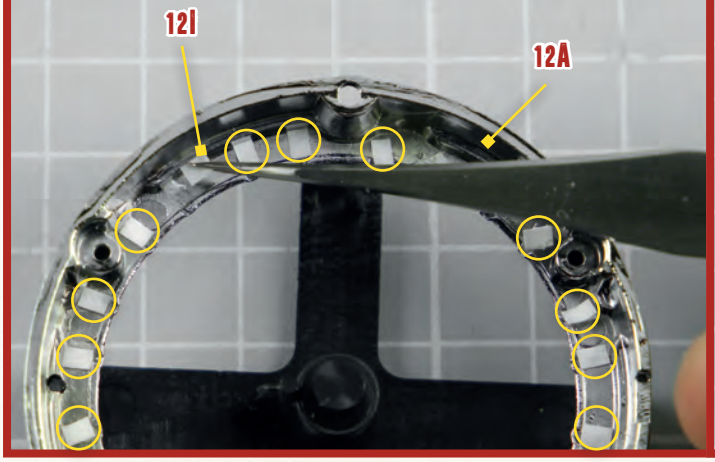

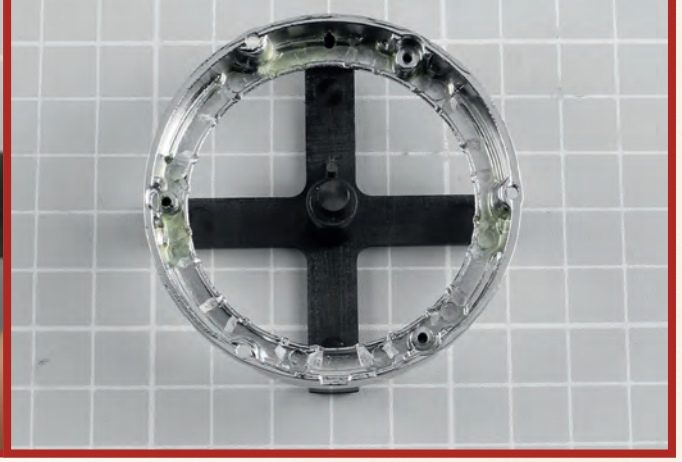

D

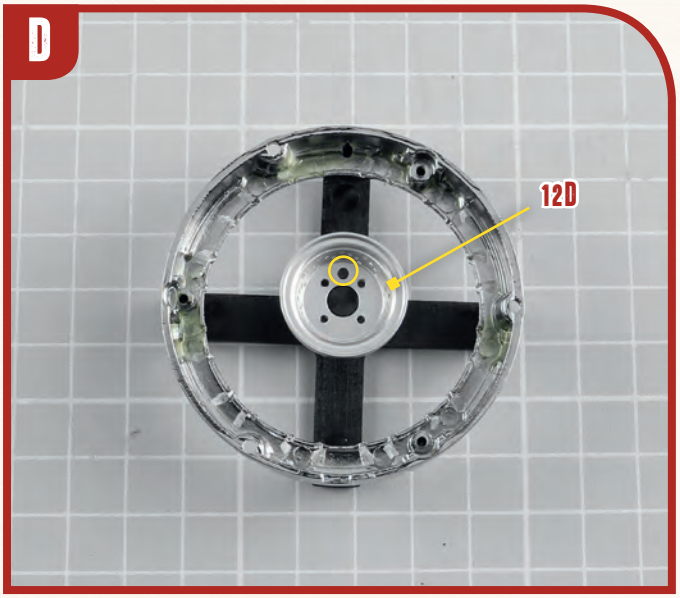

E

Insert 1 spoke 12F through a hole in 12D's first level (counting from the bottom).

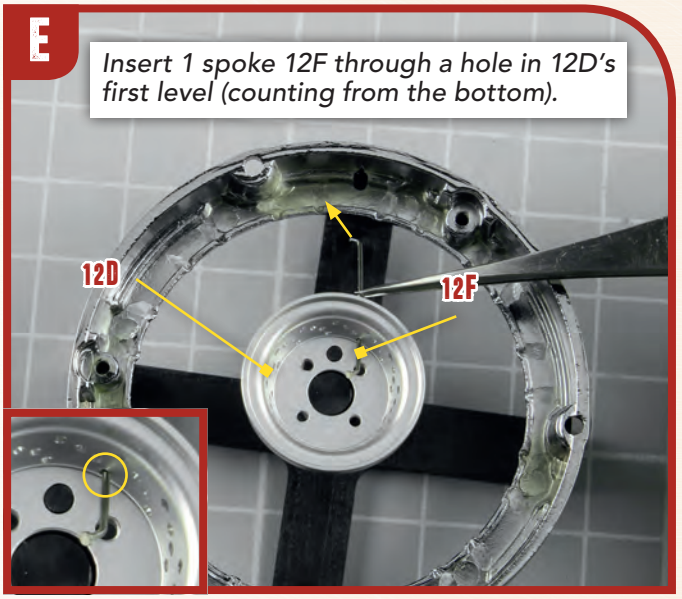

F

Repeat the process with other 11 spokes 12F.

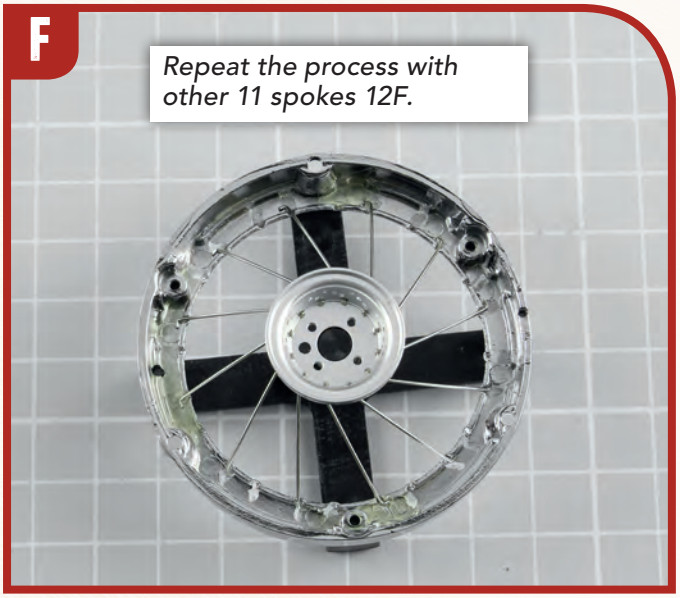

G

Insert 12 spokes 12F through 12D's third level of holes.

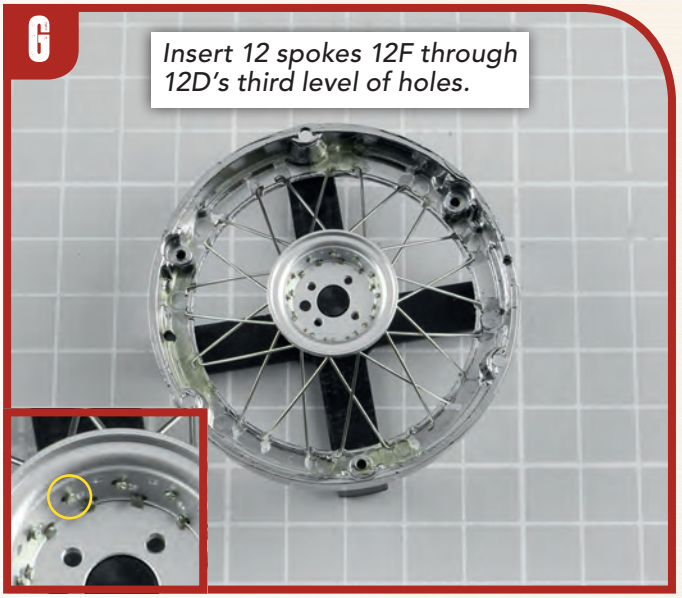

H

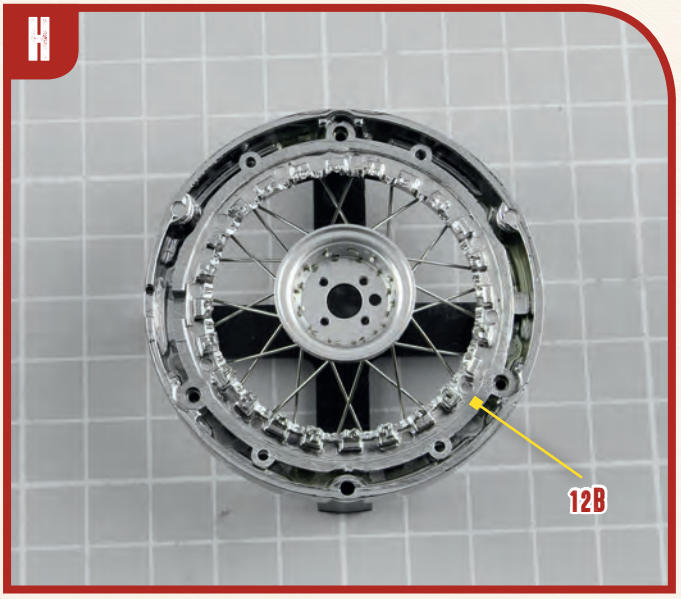

I

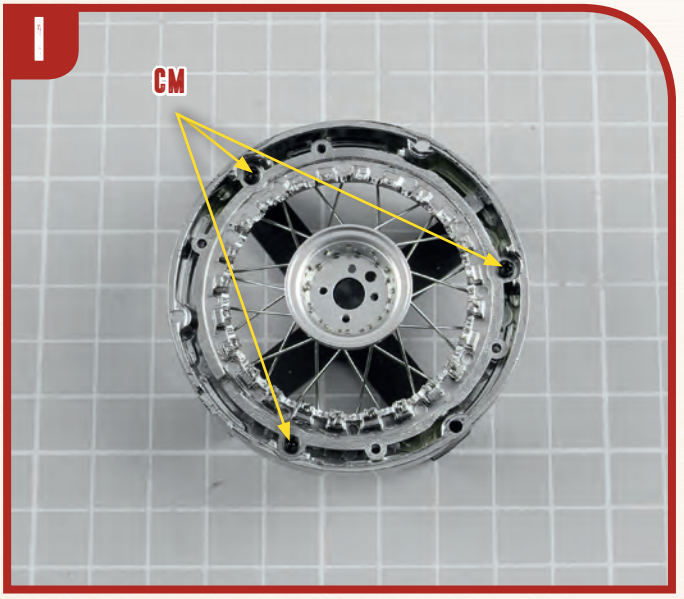

J

Insert 12 spokes 12E through 12D's second level of holes.



K

Insert 12 spokes 12E through 12D's fourth level of holes.

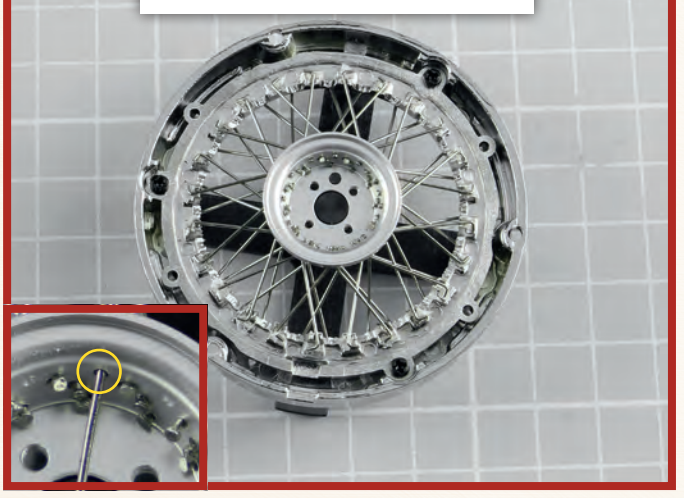

L

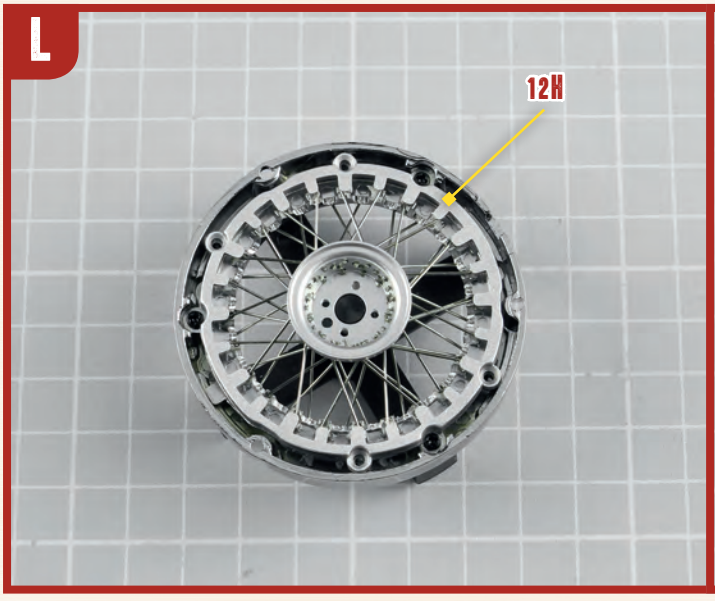

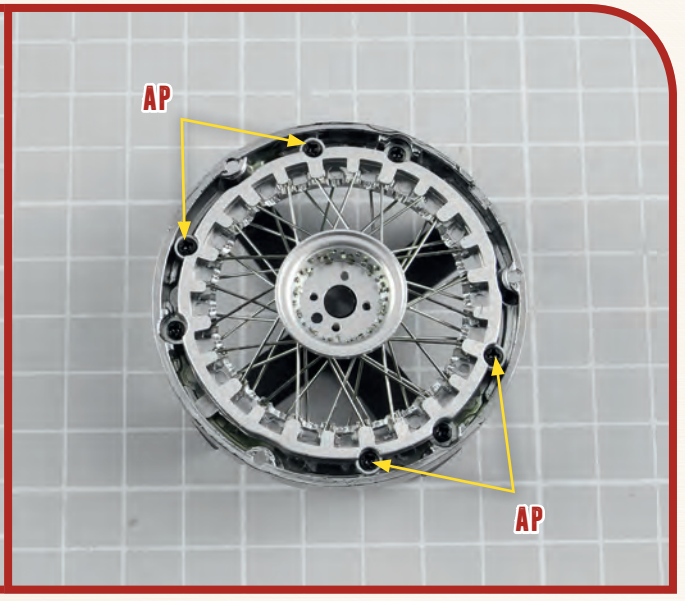

12B PARTS LIST

EASY ASSEMBLY



12AA	Central ring 1	**12GG**	Spokes 2
12BB	Hub 1	**12HH**	Tweezers
12CC	Hub 2		
12DD	Hub 3	**LP**	5 screws (1.5x3mm)
12EE	Hub 4	**TP**	4 screws (1.5x5mm)
12FF	Spokes 1	**UP**	4 screws (1.7x4mm)

A

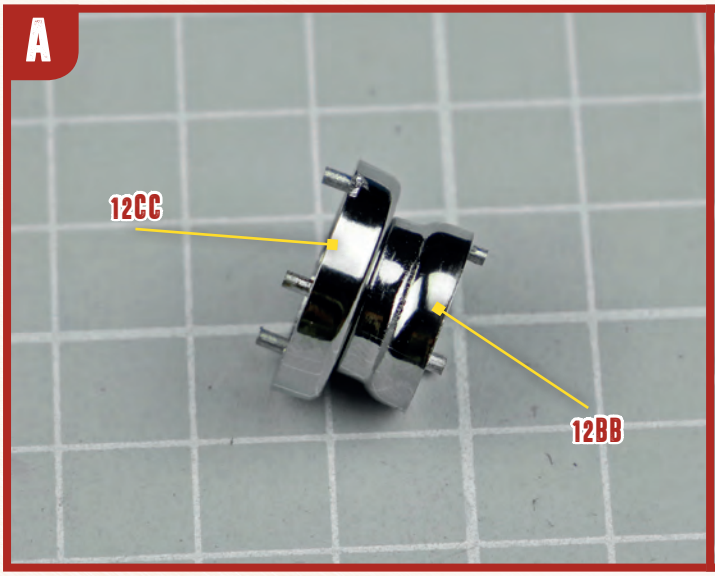

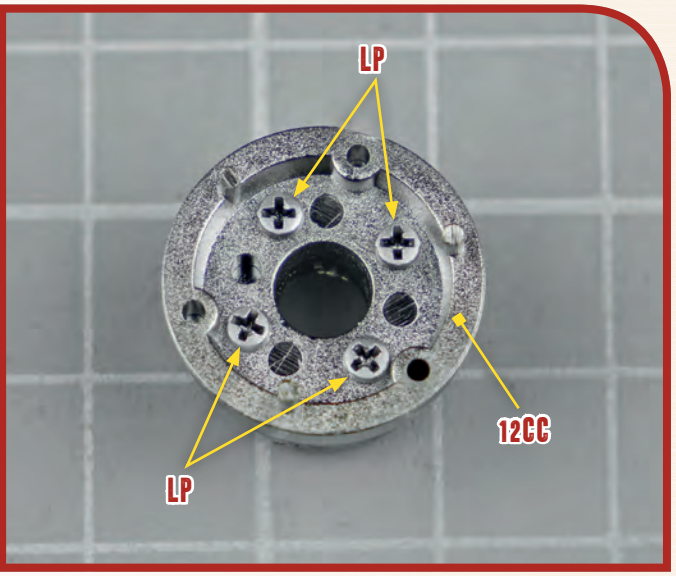

B

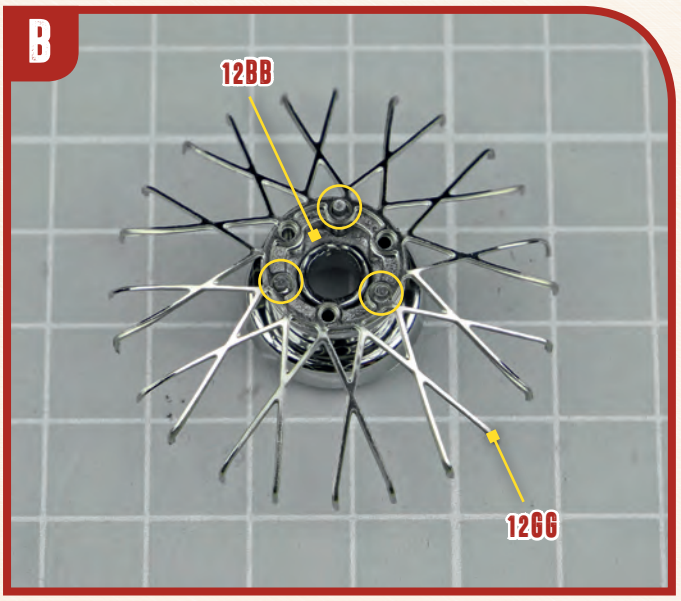
12BB
12GG

C

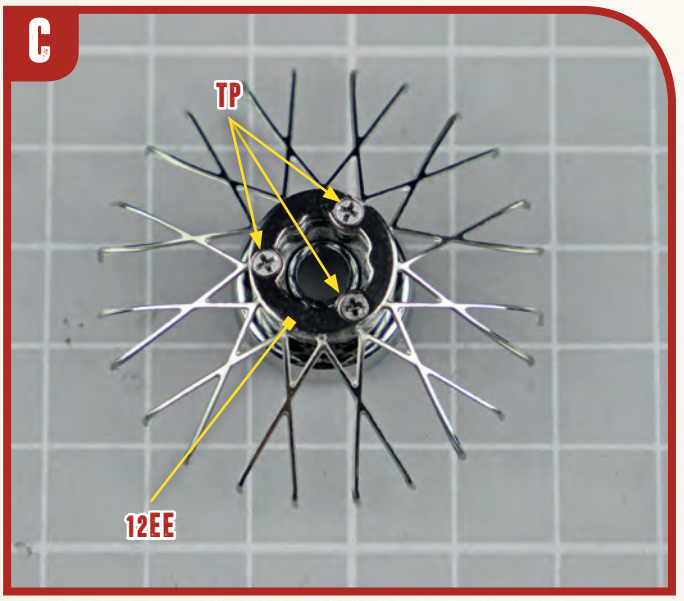
TP
12EE

D

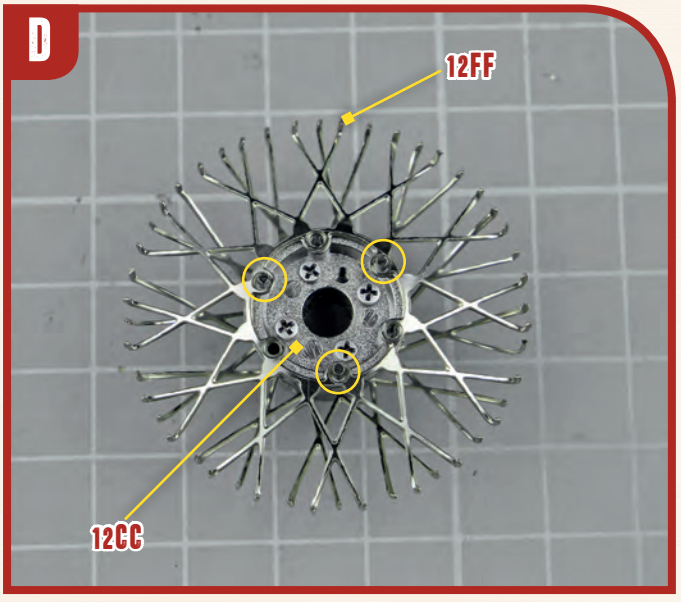
12FF
12CC

E

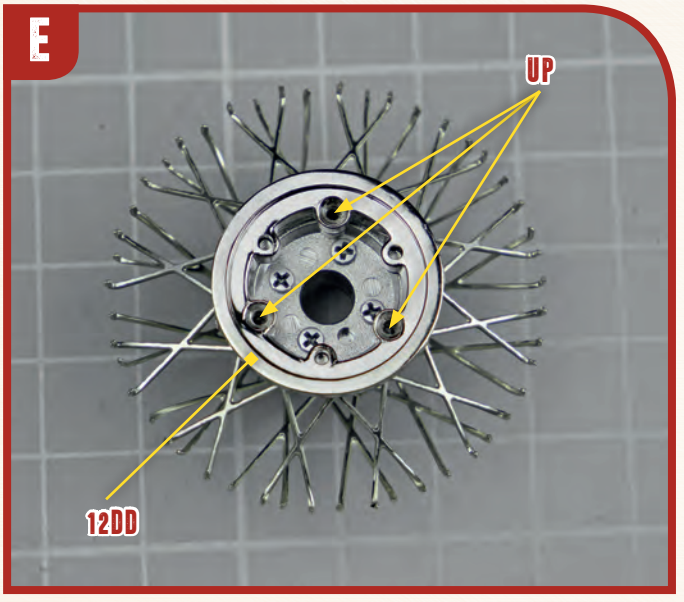
UP
12DD

F

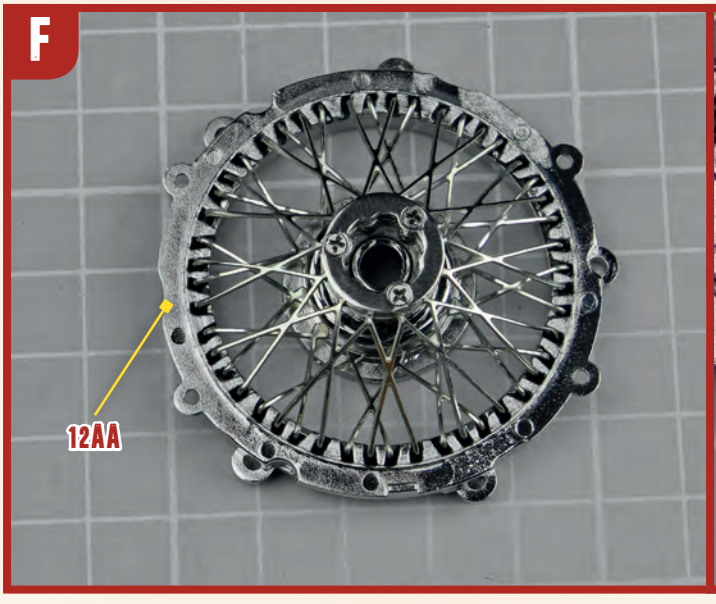
12AA

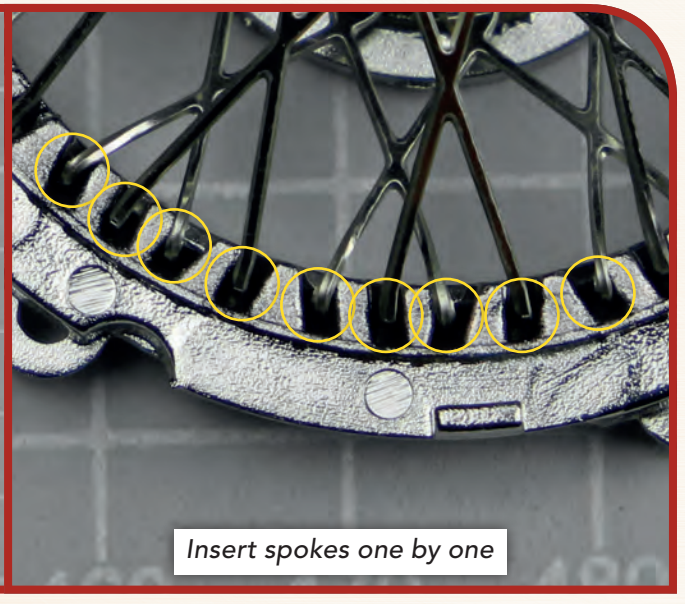
Insert spokes one by one

13 PARTS LIST

REGULAR ASSEMBLY



13A	Inner rim
13B	Central ring 3
13C	Hub 2
13D	Spokes 3
13E	Double-sided tape
CM	4 screws (1.7x4mm)
KM	5 screws (1.5x5mm)

A

Apply 24 pieces of double-sided tape 13E to 12B's inner profile and tear off their top sheets.

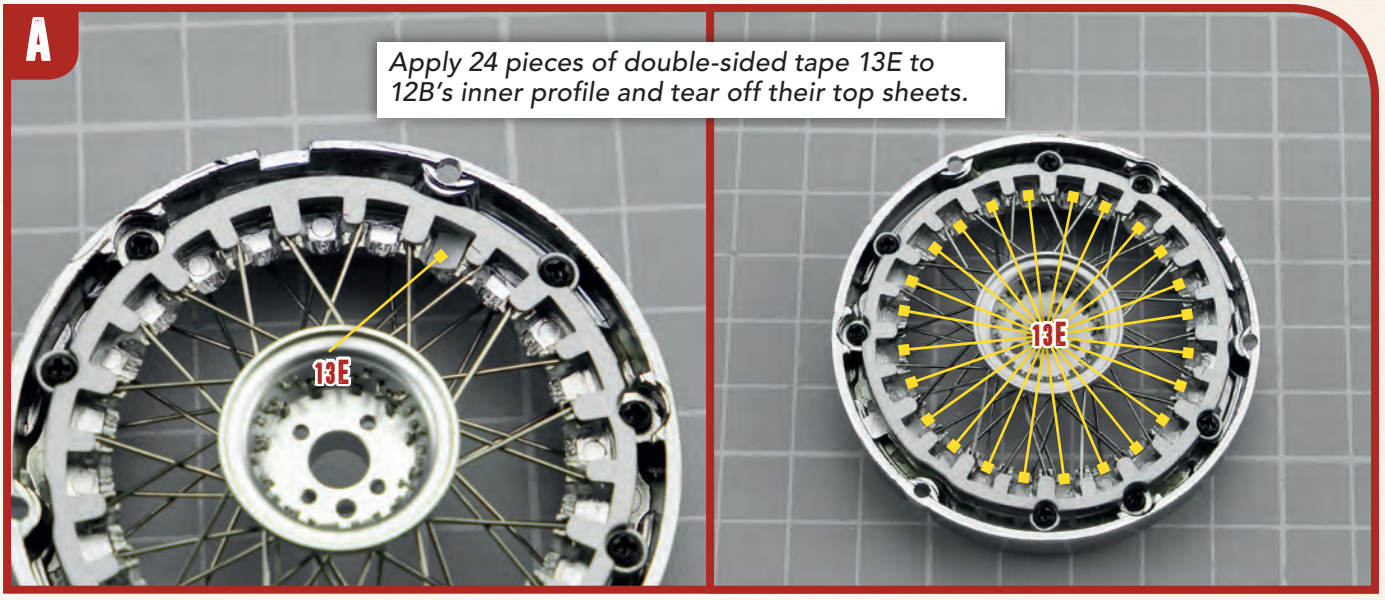

B

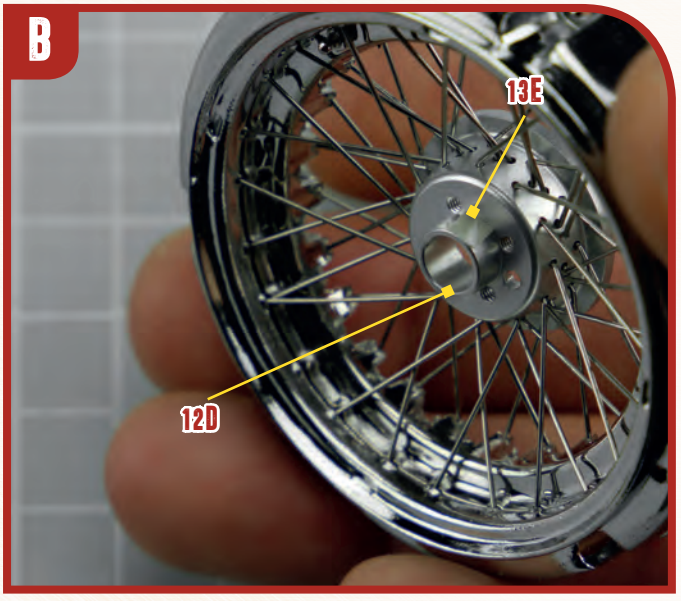

C



D

Insert 1 spoke 13D through a hole in 13C's first level (counting from the bottom). Place its thinner end as shown, on tape 13E.



E

Repeat the process with other 11 spokes 13D. Leave one empty spot between the thinner ends of spokes 13D.



F

Insert 12 spokes 13D through 13C's second level of holes. Place their thinner ends on the empty spots from Step E, on tapes 13E.



G

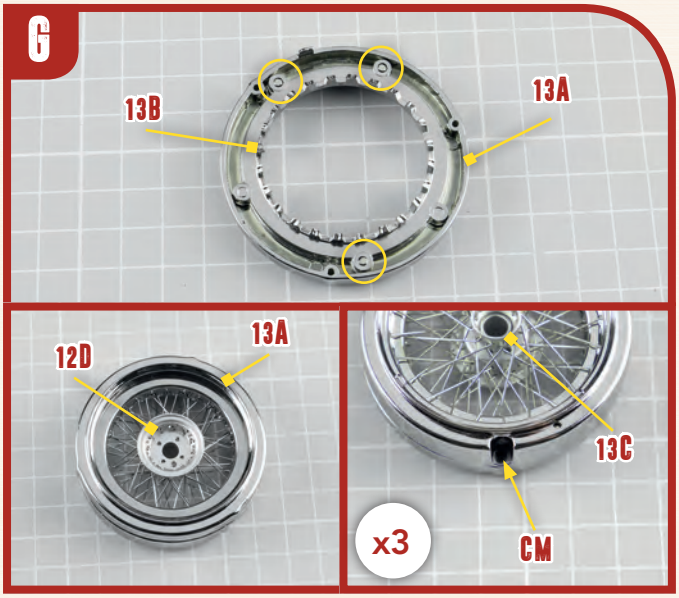

H

Tighten or loosen the four KM screws to adjust the position of the spokes.

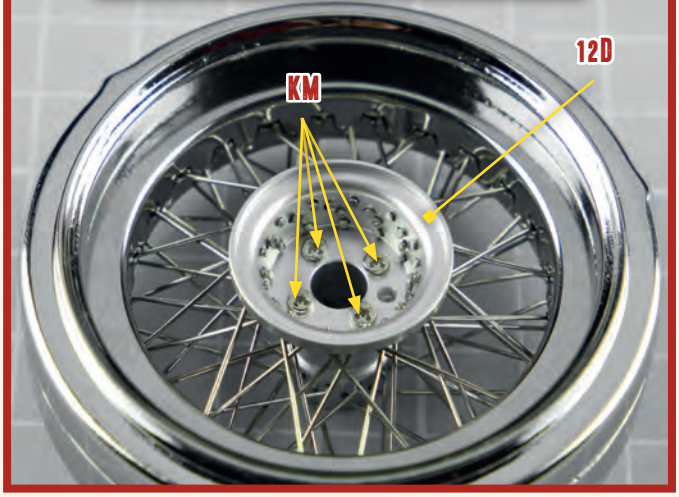

13B PARTS LIST



EASY ASSEMBLY

13AA Outer rim
13BB Inner rim
13CC Central ring 2
13DD Inflation valve

AP 5 screws (1.7x4mm)
CM 8 screws (1.7x4mm)

A

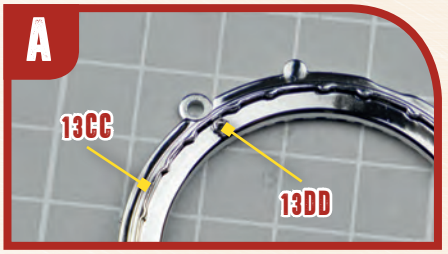

B

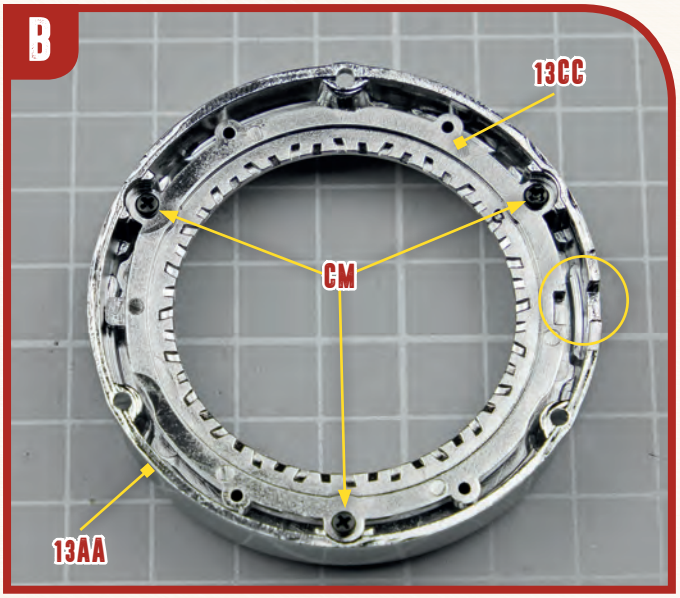

C

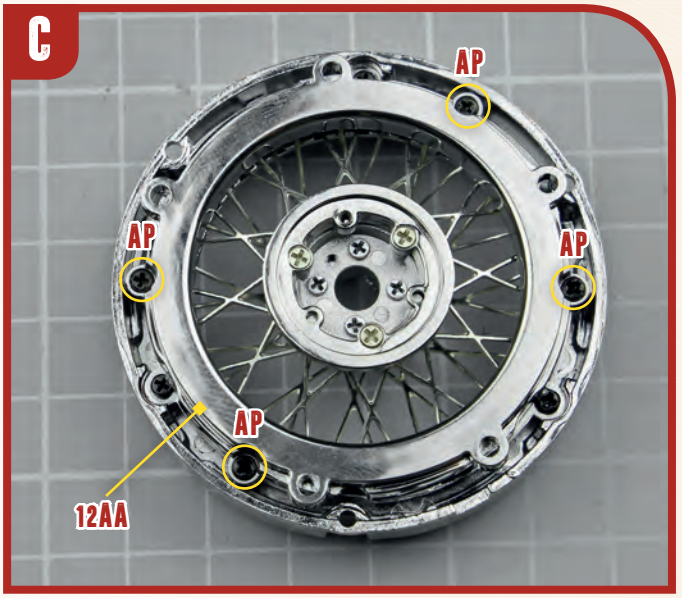

D



E

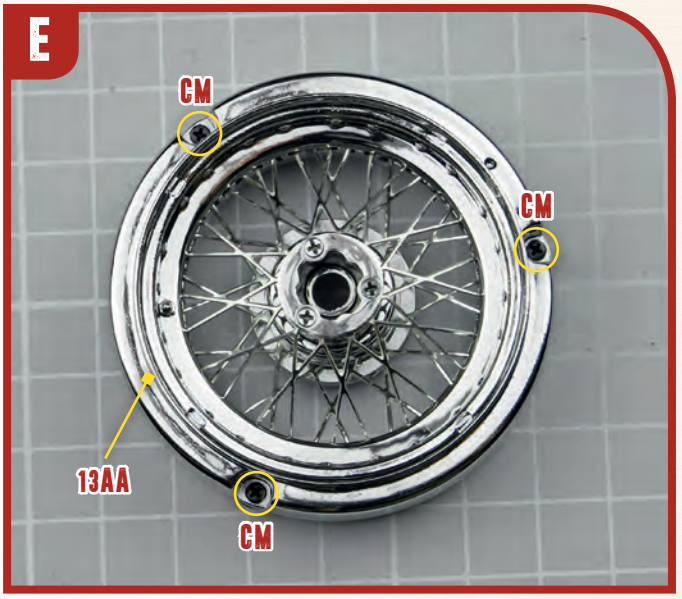

14 PARTS LIST

REGULAR ASSEMBLY



14A Tyre
14B Hub 3
14C Hubcap
14D Washer ring

A

Soften tyre 14A by placing it in a bowl full of hot water.

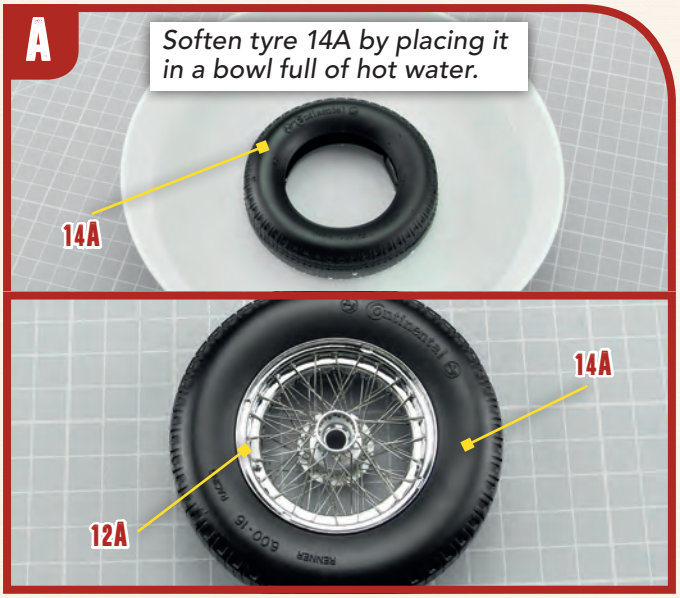

B

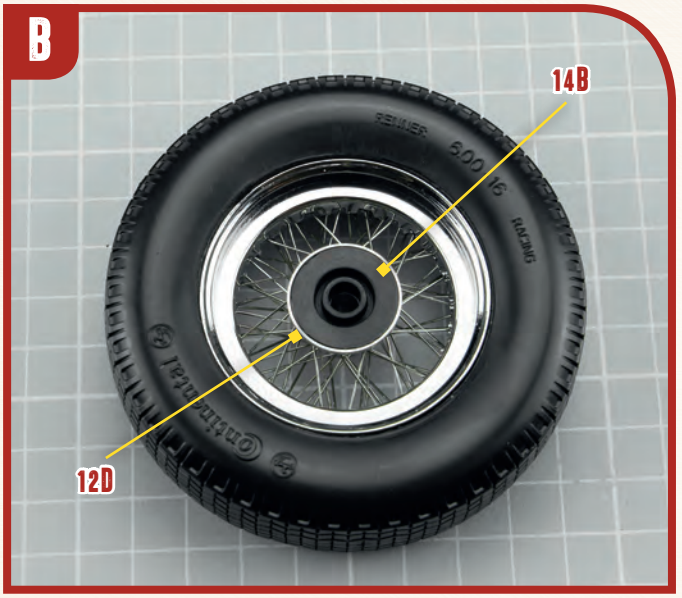

C



D

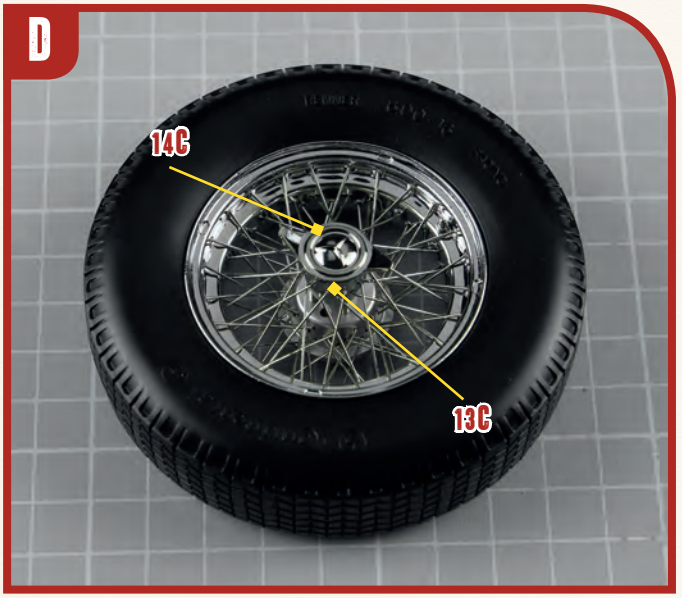

14B PARTS LIST



EASY ASSEMBLY

14AA Tyre
14BB Hubcap
14CC Hub 5
14DD Washer ring

A



Soften tyre 14AA by placing it in a bowl full of hot water.

B

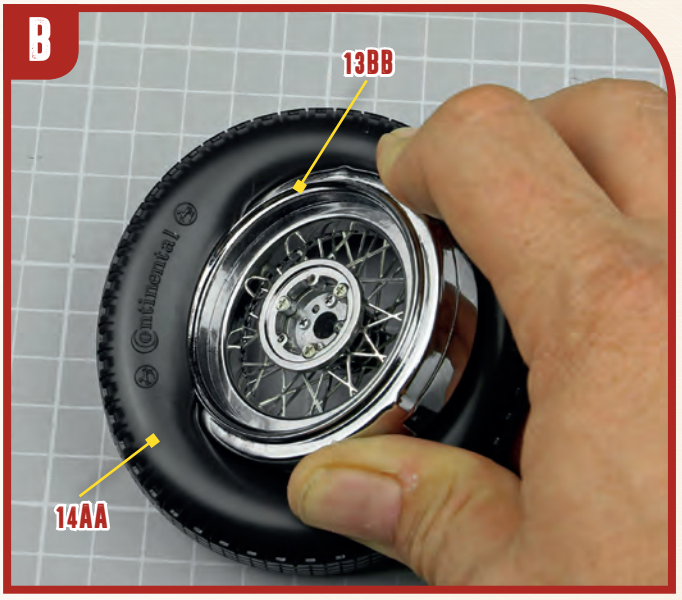

C

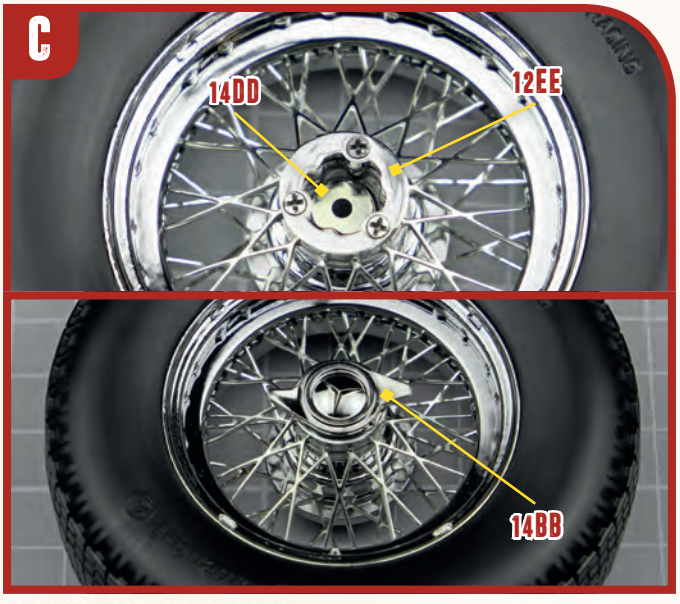

D

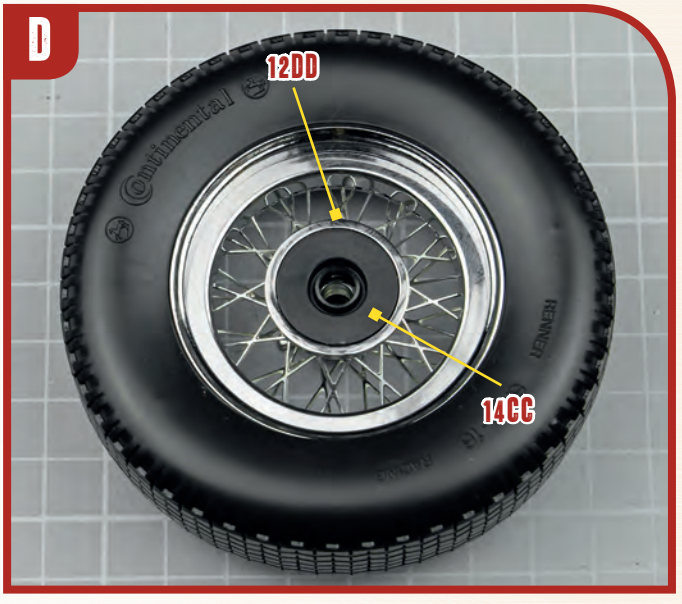

15 PARTS LIST

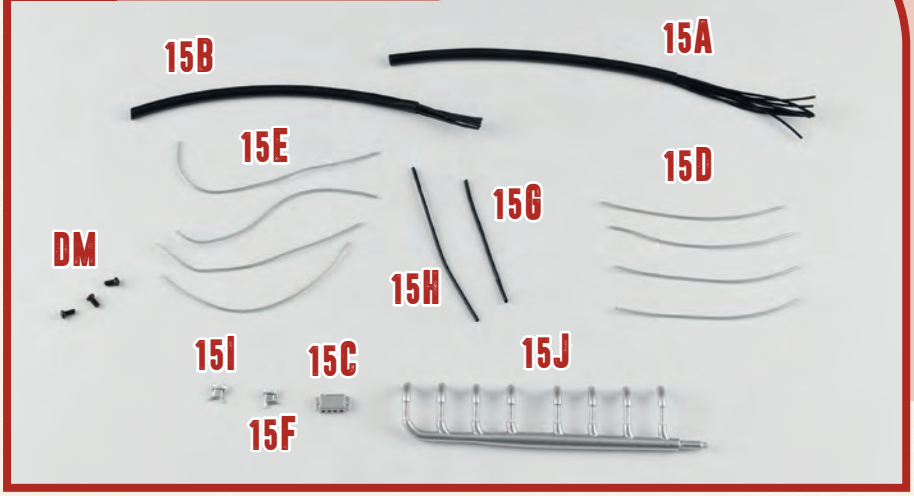

15A	Spark plugs wire 1
15B	Spark plugs wire 2
15C	Fuel lines fairlead
15D	Fuel lines 1 (x4)
15E	Fuel lines 2 (x4)
15F	Oil hoses connector 1
15G	Oil hose 1
15H	Oil hose 2
15I	Oil hoses connector 2
15J	Engine cooling duct
DM	3 screws (2x4mm)

A

Temporarily remove fuel pump before attaching 15J to engine.

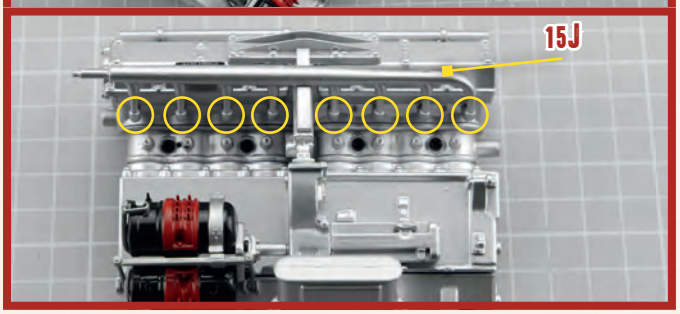

B

Reattach fuel pump to engine and connect spark plugs wires to starters 6B and 6F.

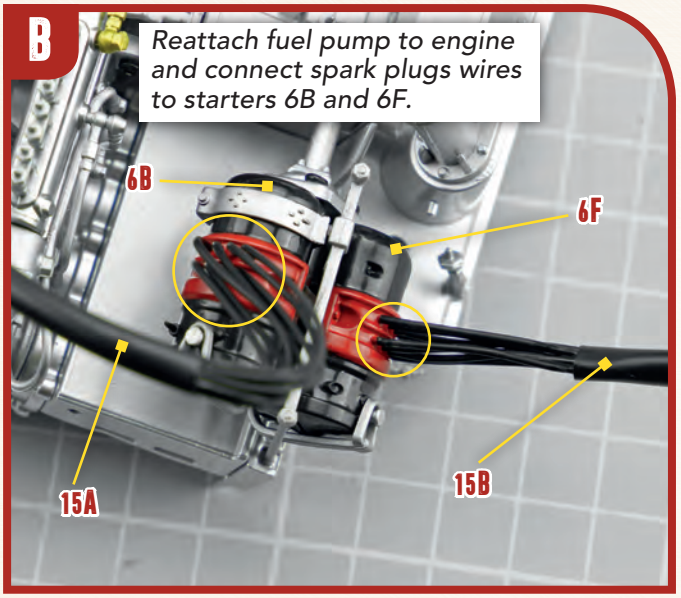

C

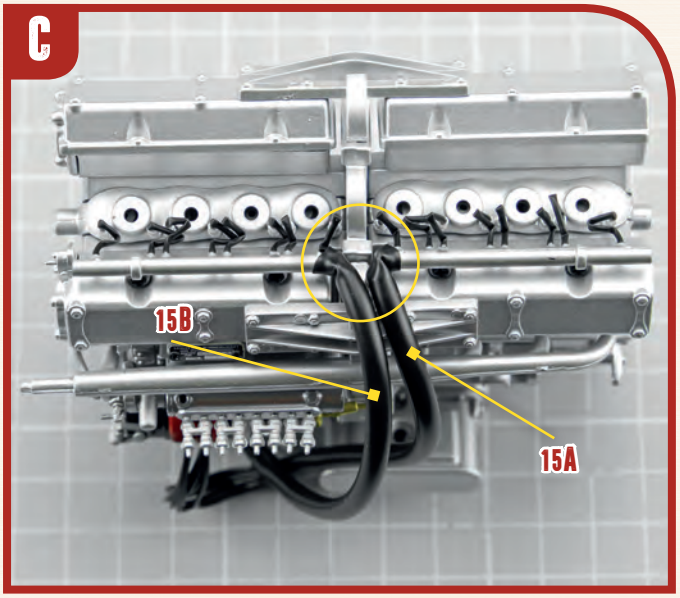

D

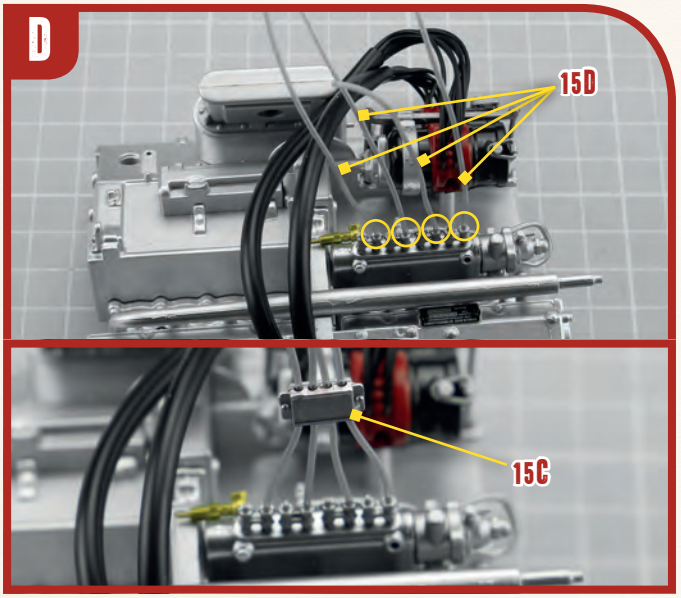

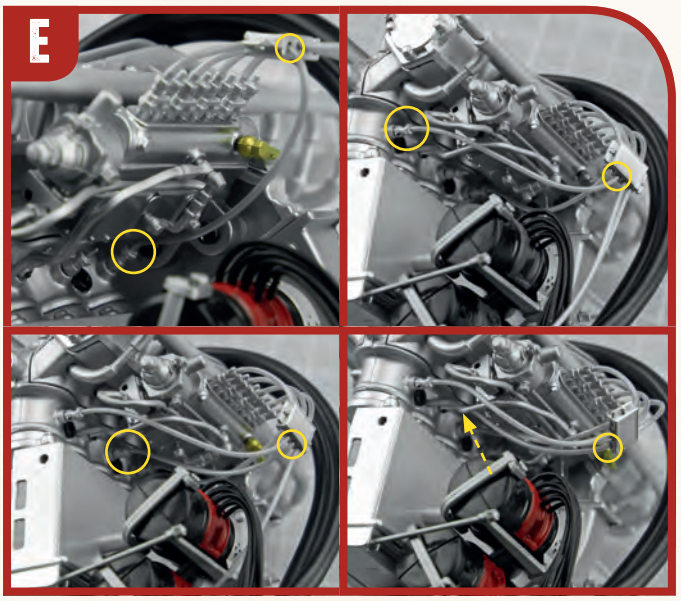
E

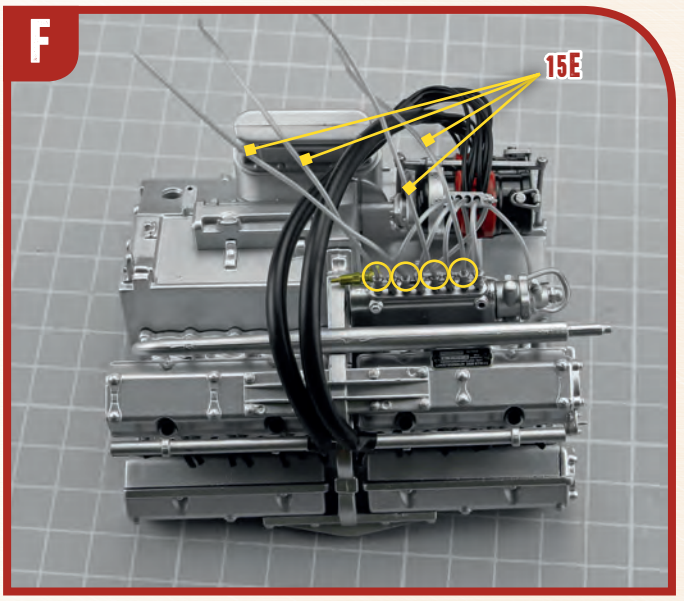
F
15E

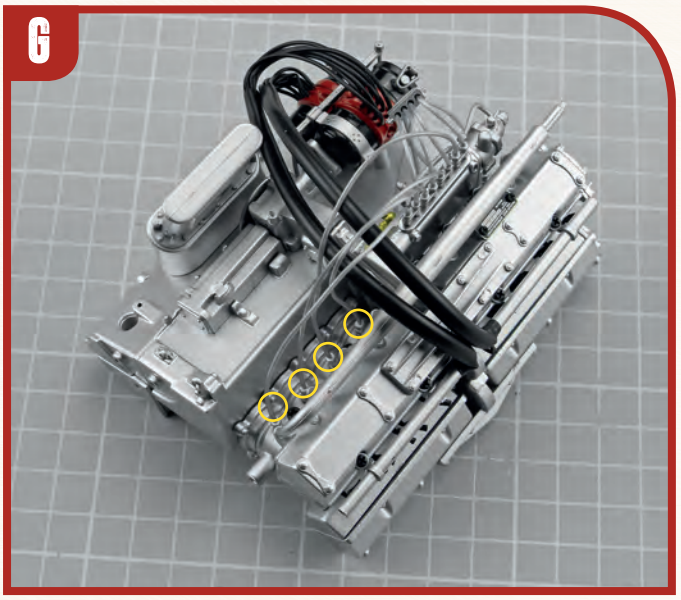
G

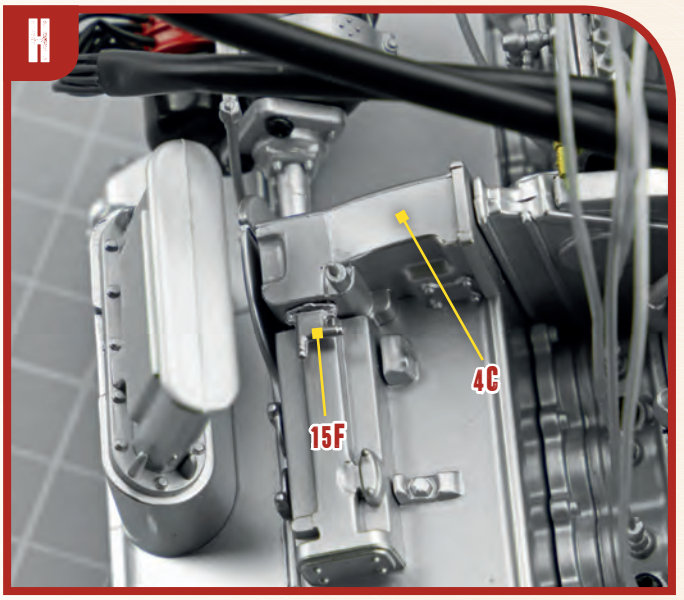
H
4C
15F

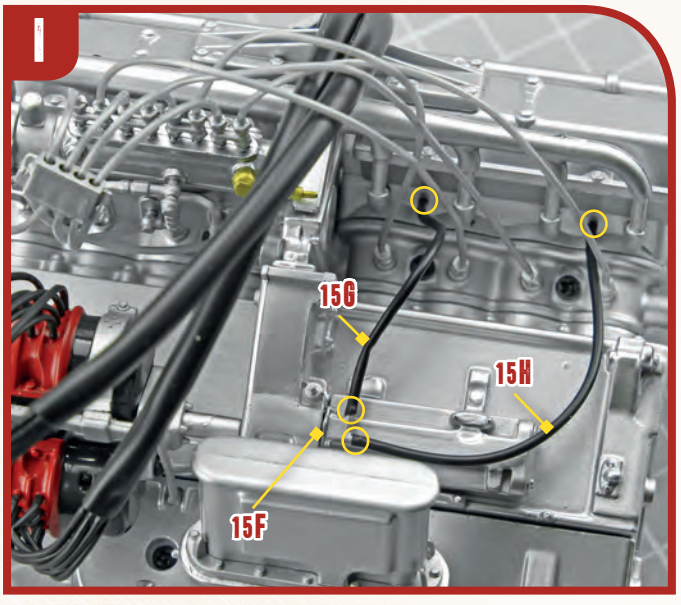
I
15G
15H
15F

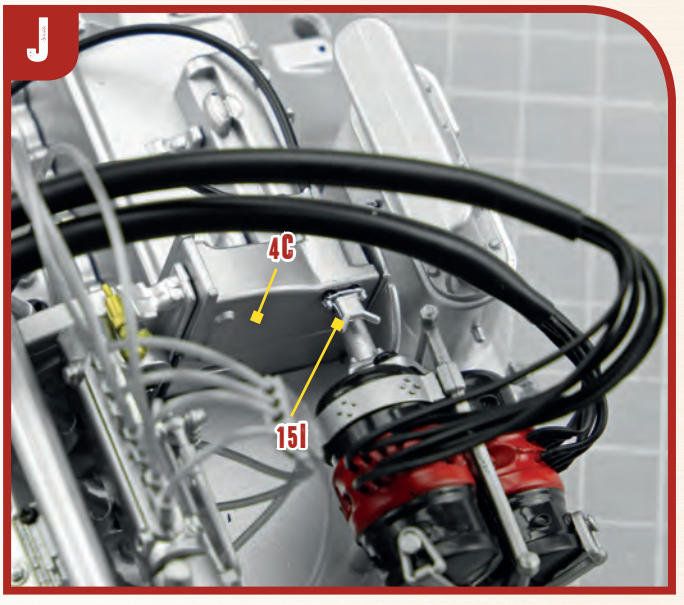
J
4C
15I

16 PARTS LIST



16A Expansion tank connector
16B Fuel pump connector
16C Fuel pump line
16D Oil hoses connector 3
16E Oil hose 3
16F Oil hoses connector 4
16G Oil hose 4
16H Oil hose 5
16I Detail

A

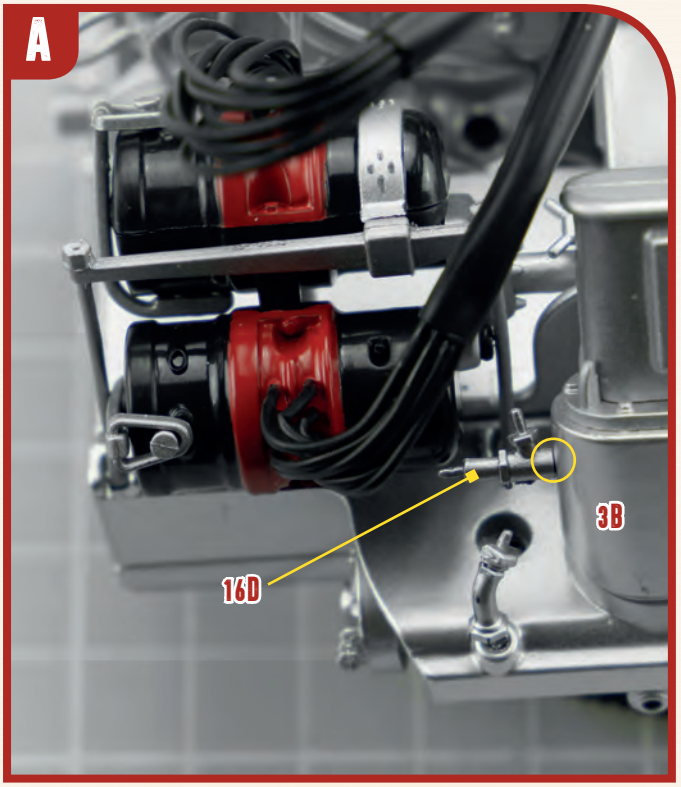

B

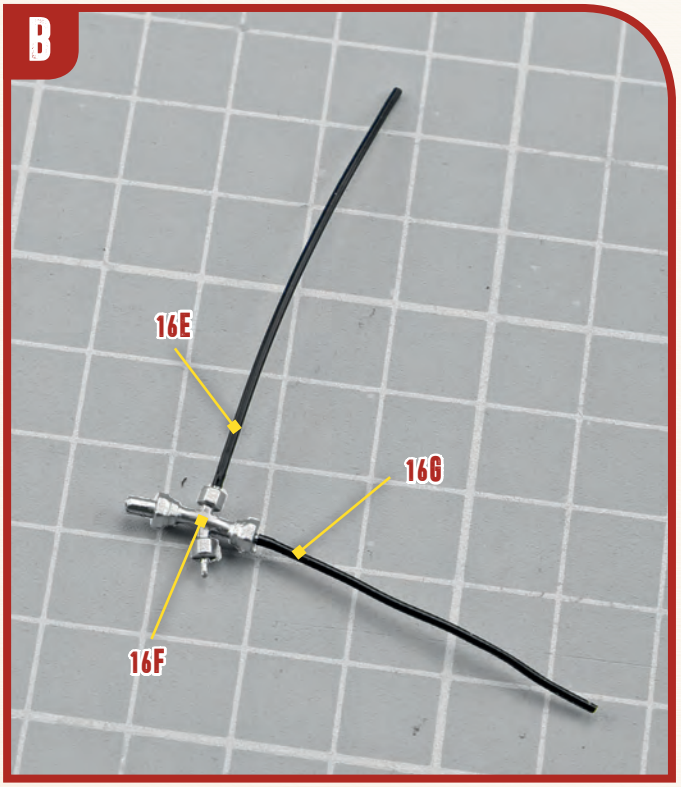

C

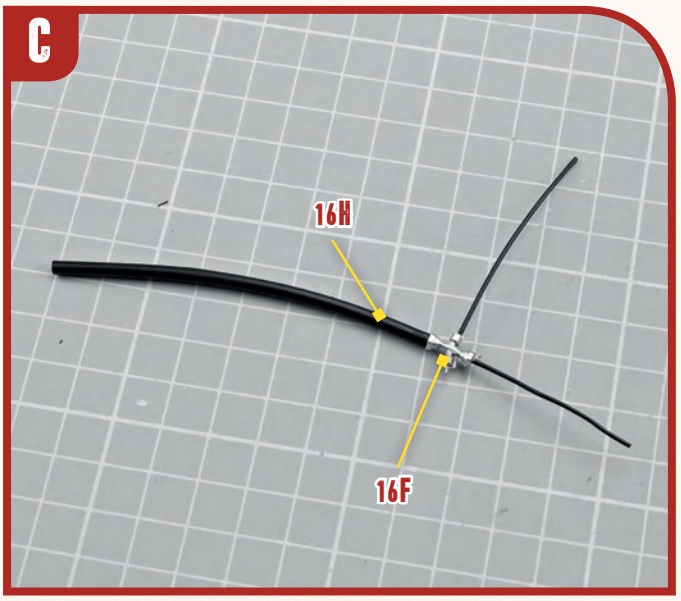

D

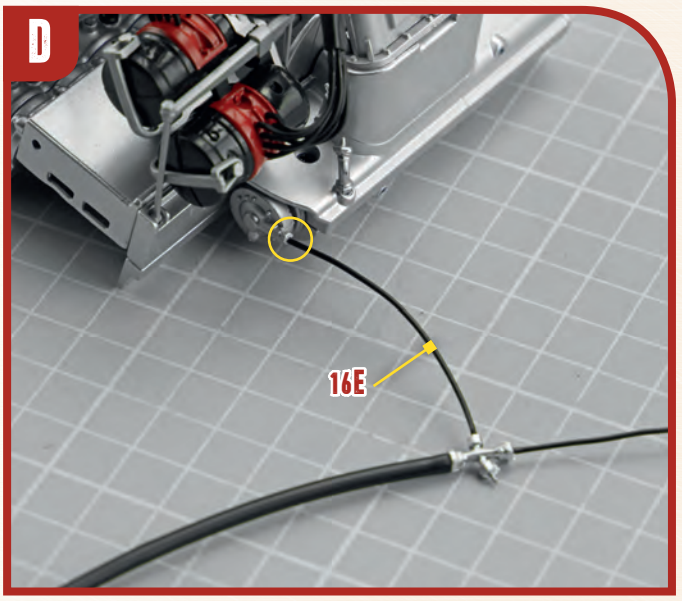

E

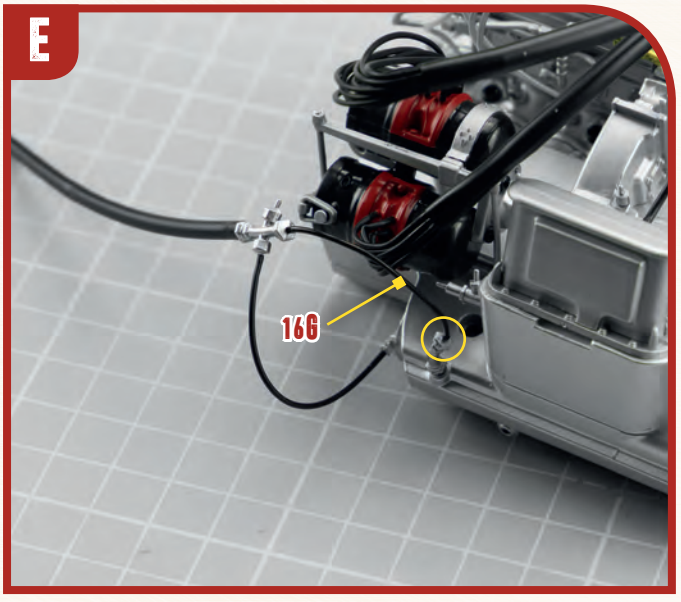

F

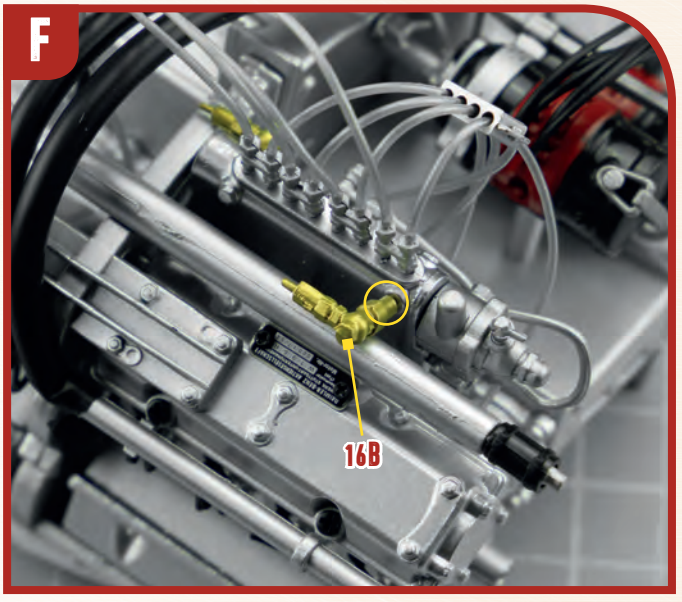

G

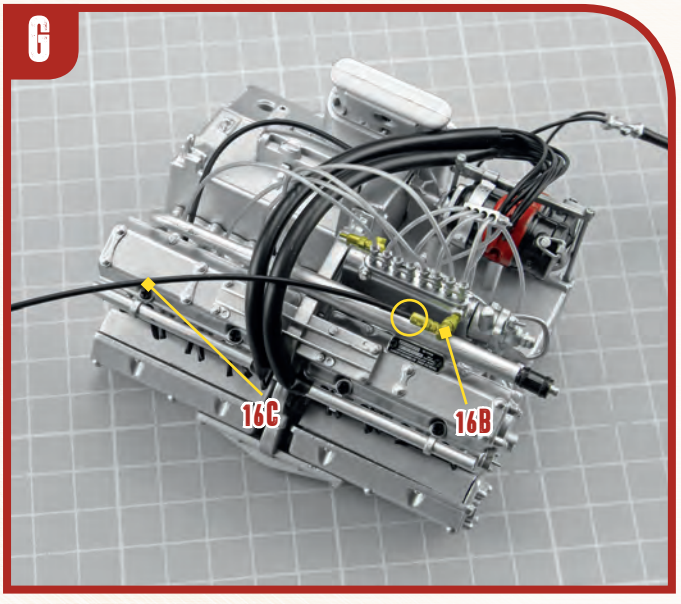

H

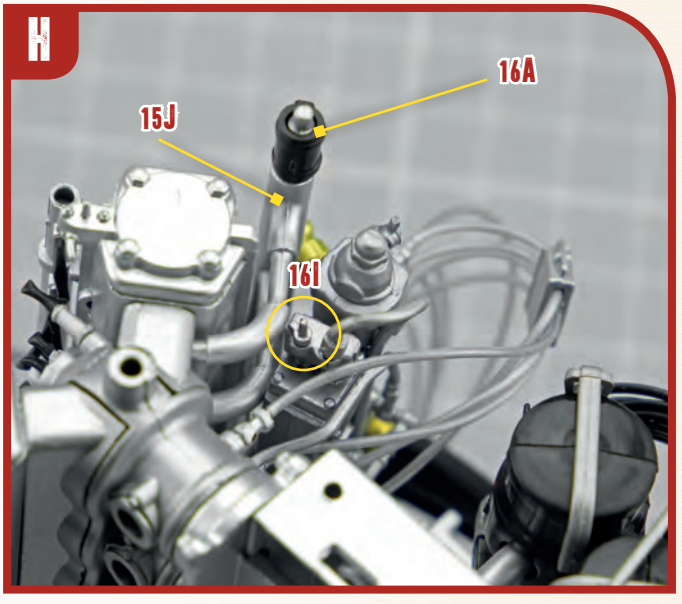

17 PARTS LIST

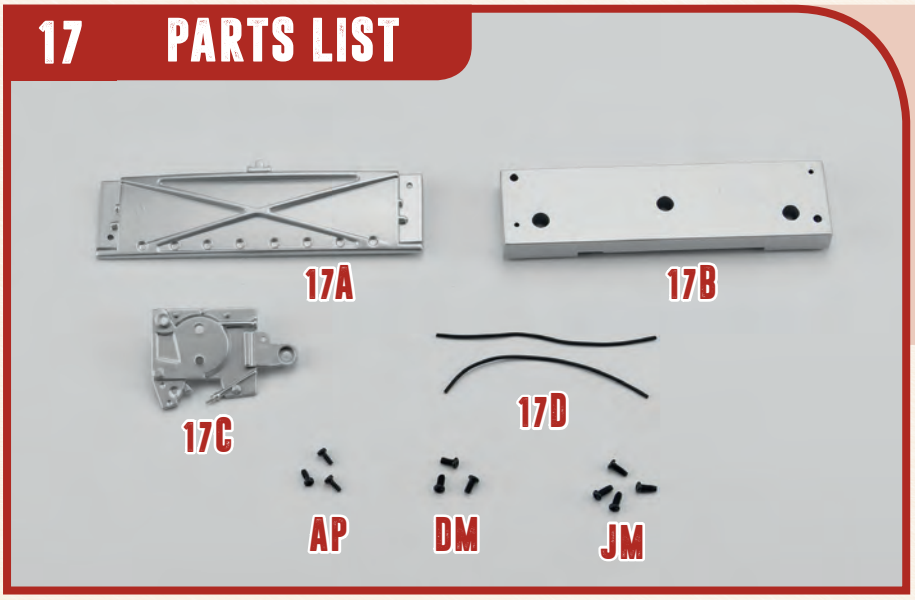

17A	Engine side cover part A
17B	Engine side cover part B
17C	Engine front cover
17D	Oil hoses 6 (x2)
AP	3 screws (1.7x4mm)
DM	3 screws (2x4mm)
JM	4 screws (2x5mm)

A

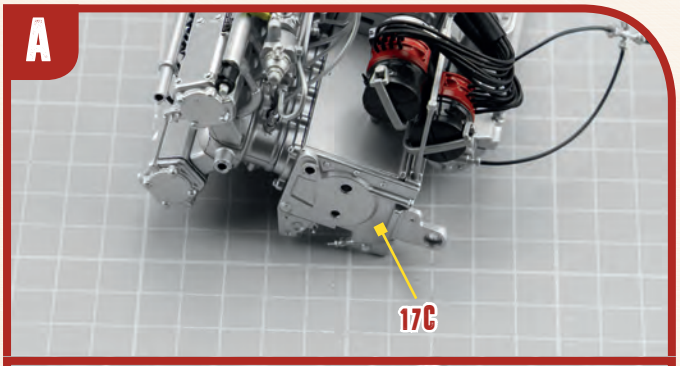

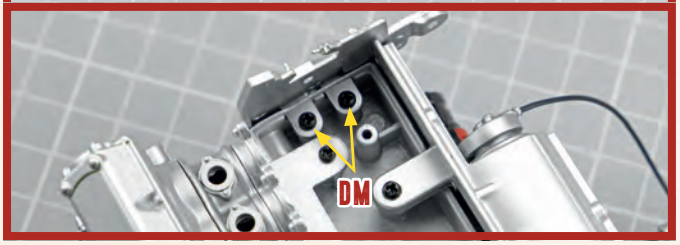

B

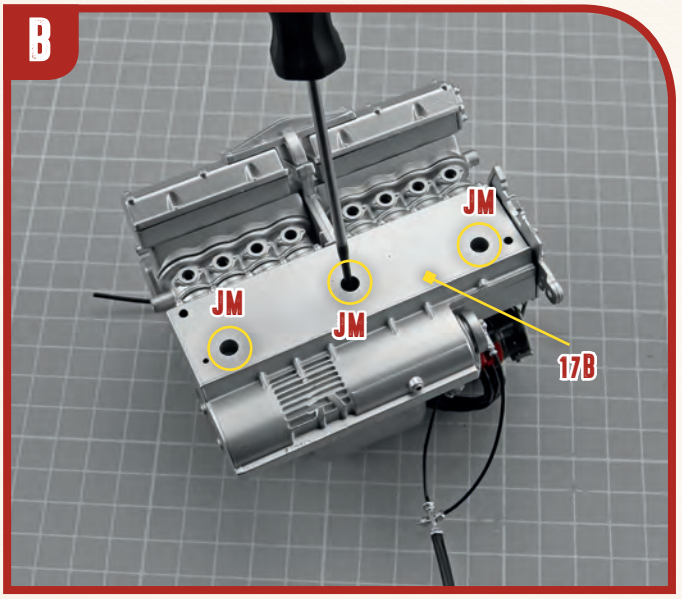

C

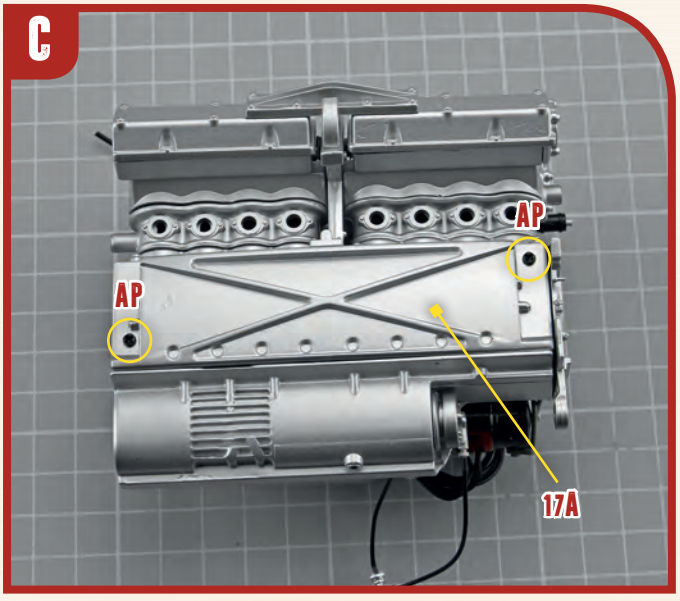

D

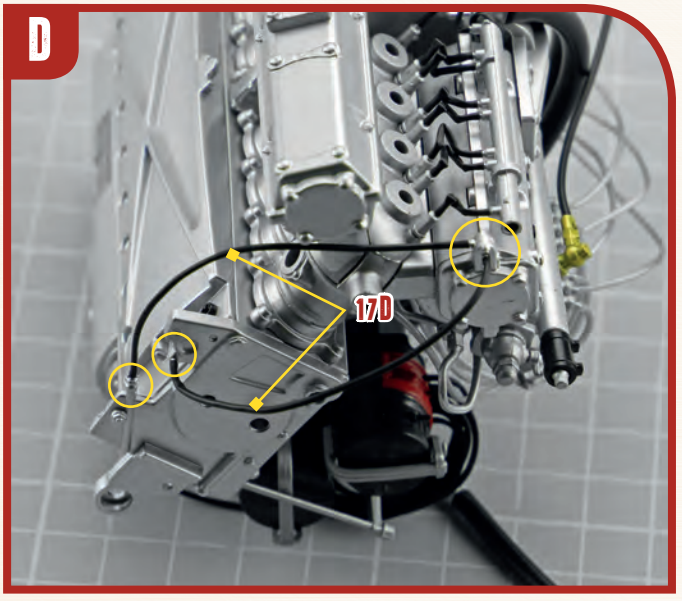

18 PARTS LIST

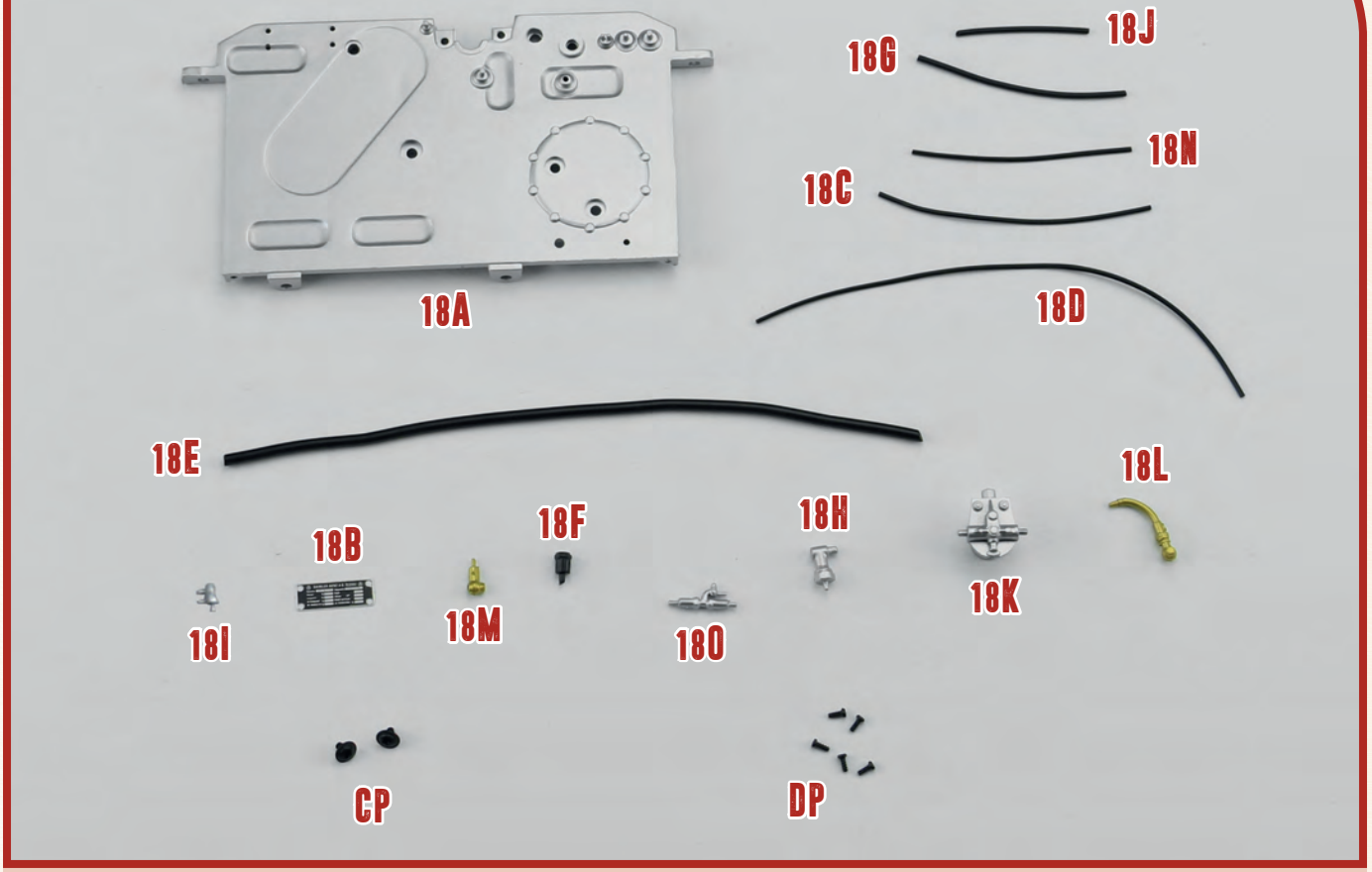

18A Firewall
18B Plate
18C Oil hose 7
18D Starter wire
18E Oil radiator hose
18F Oil radiator connector
18G Oil hose 8
18H Oil hoses connector 5
18I Oil hoses connector 6
18J Oil hose 9
18K Fuel filter
18L Fuel line 3
18M Fuel lines connector 1
18N Fuel line 4
18O Oil hoses connector 7

CP 2 screws (1.7x3x5mm)
DP 5 screws (1.2x3mm)

A

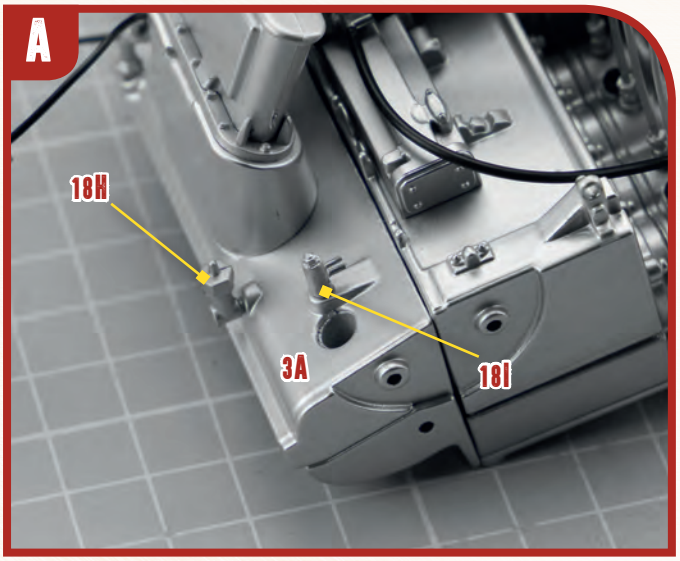

B

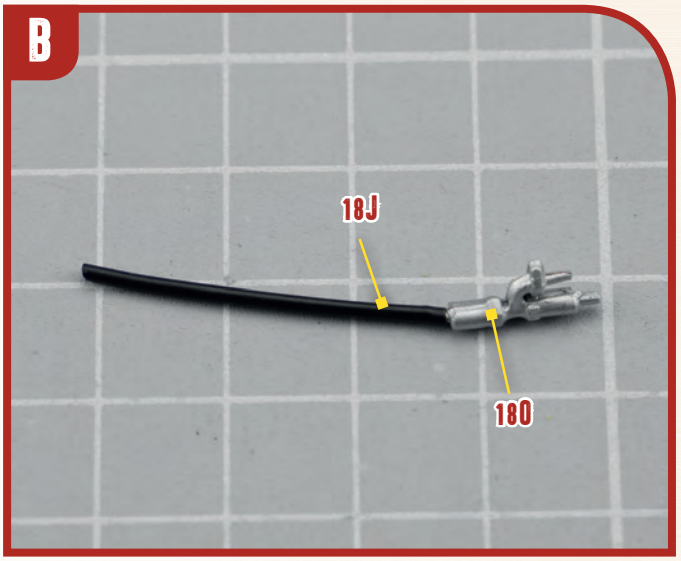

C

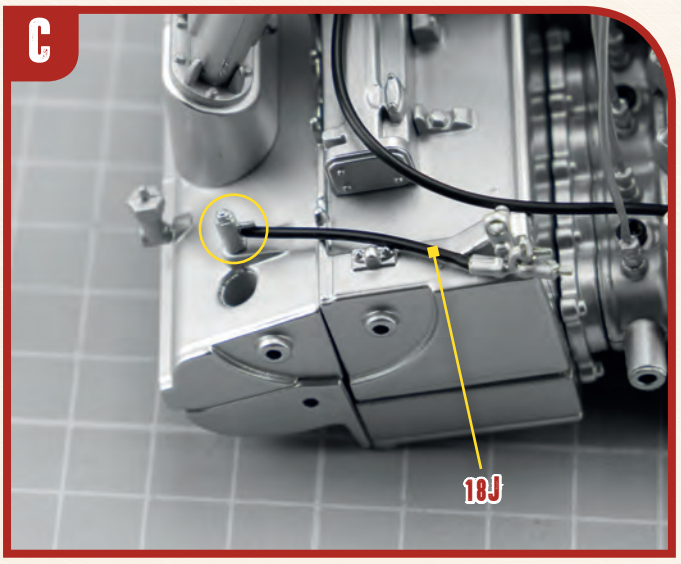

D

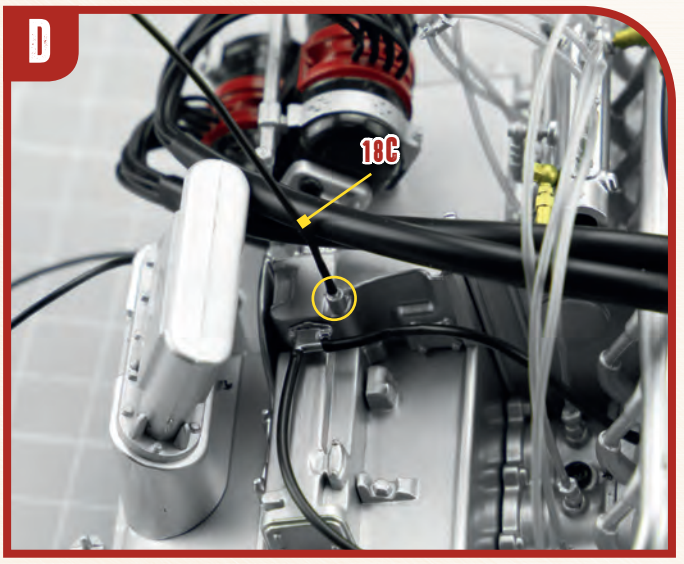

E

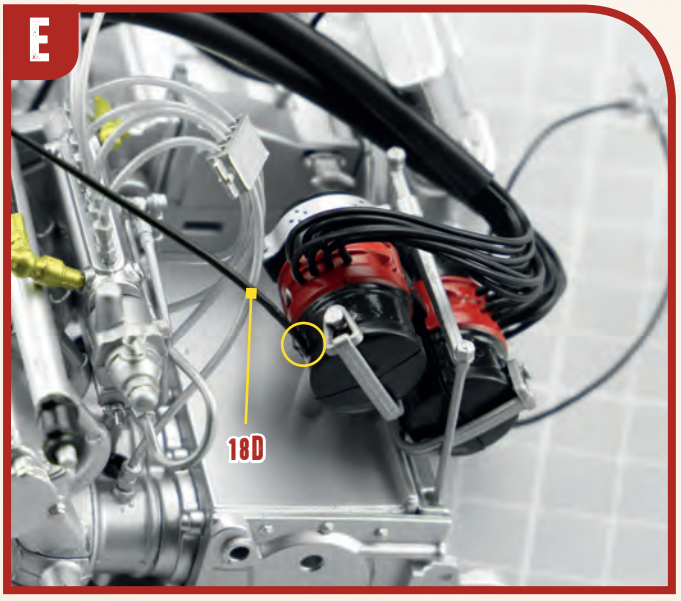

F

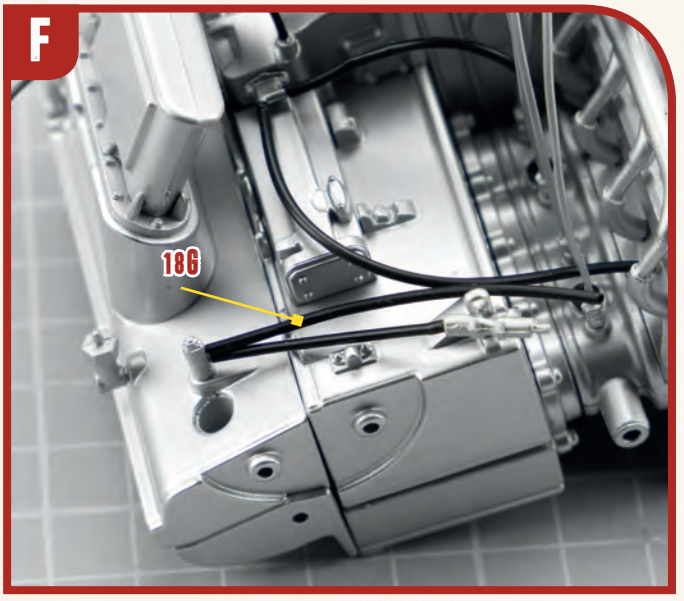

G

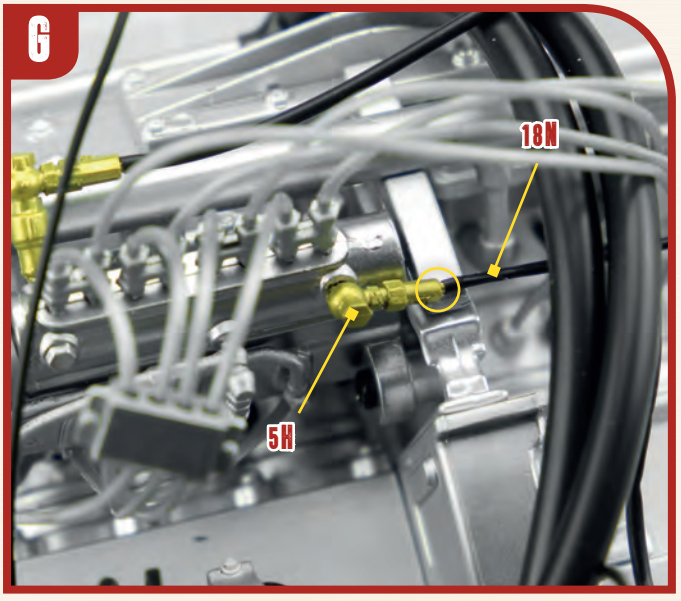

H

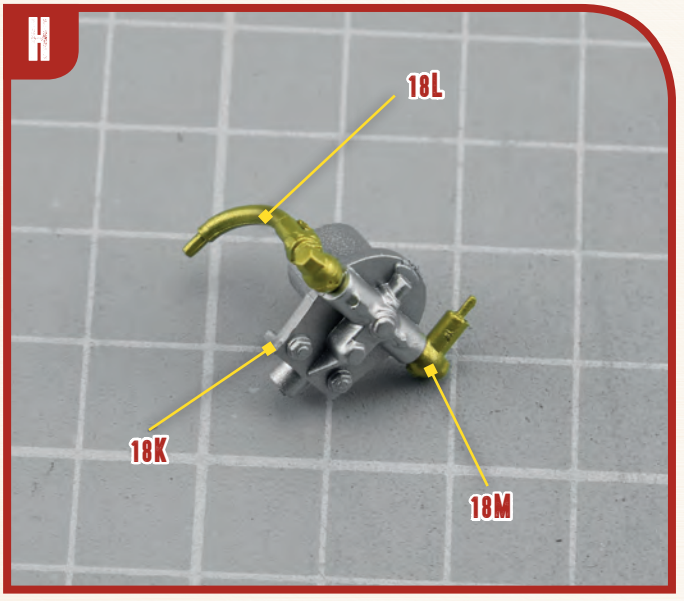

I

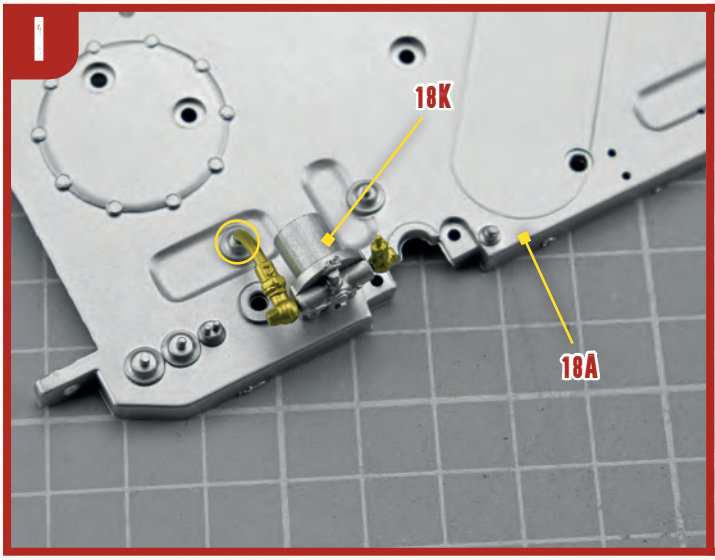

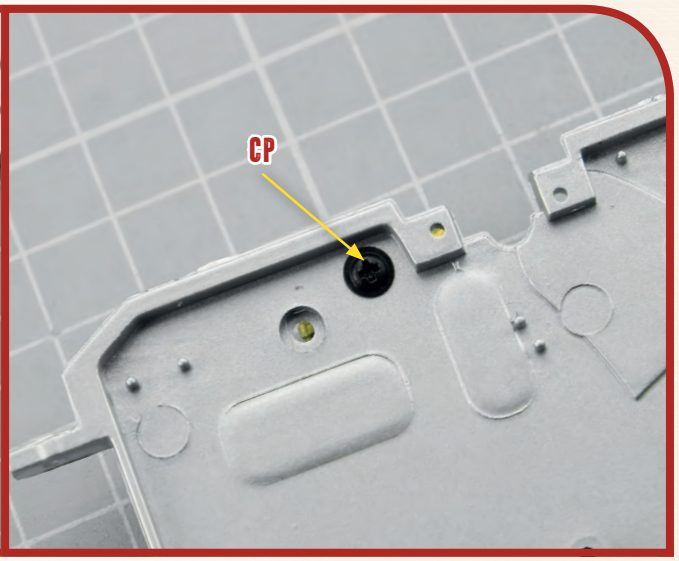

J

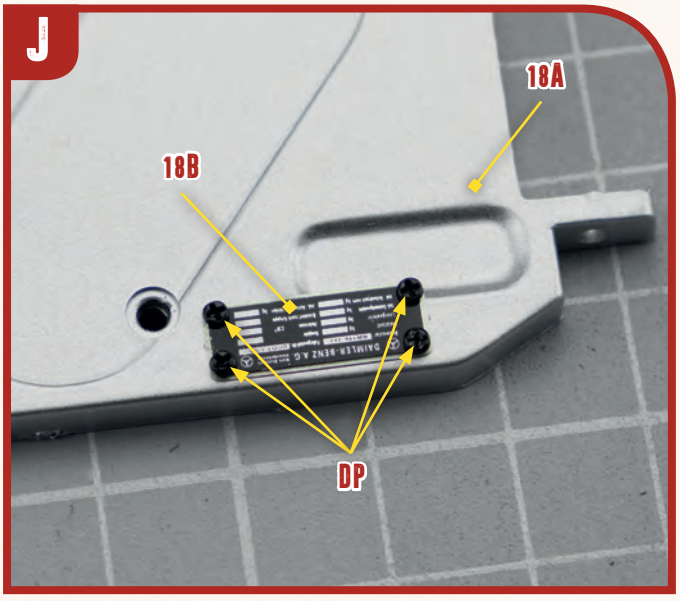

K

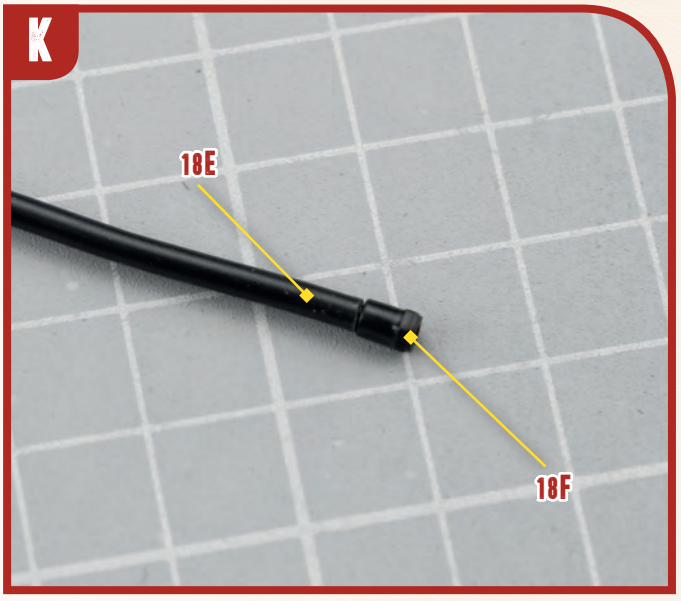

J

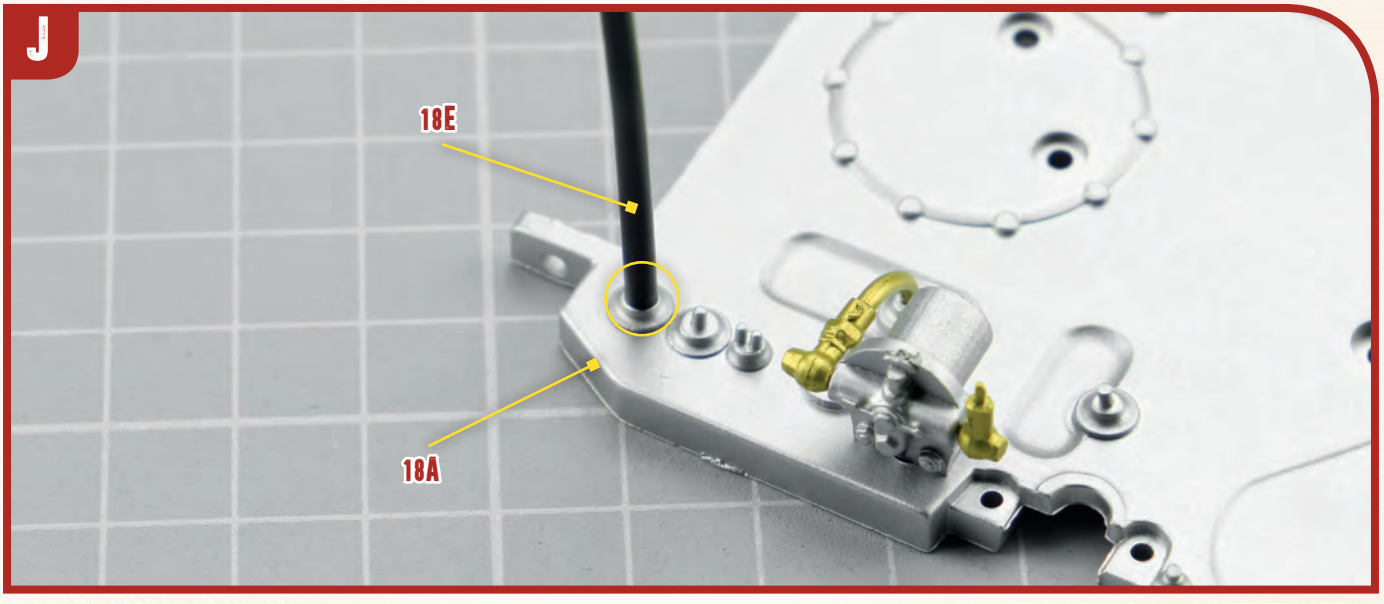

19 PARTS LIST

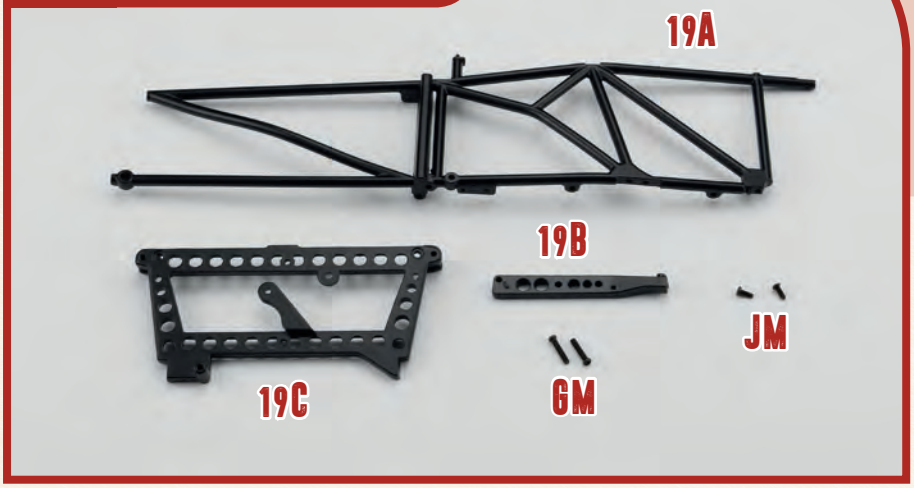

19A	Chassis – left section
19B	Radiator support (L)
19C	Front suspension support 1
GM	2 screws (2x10mm)
JM	2 screws (2x5mm)

A

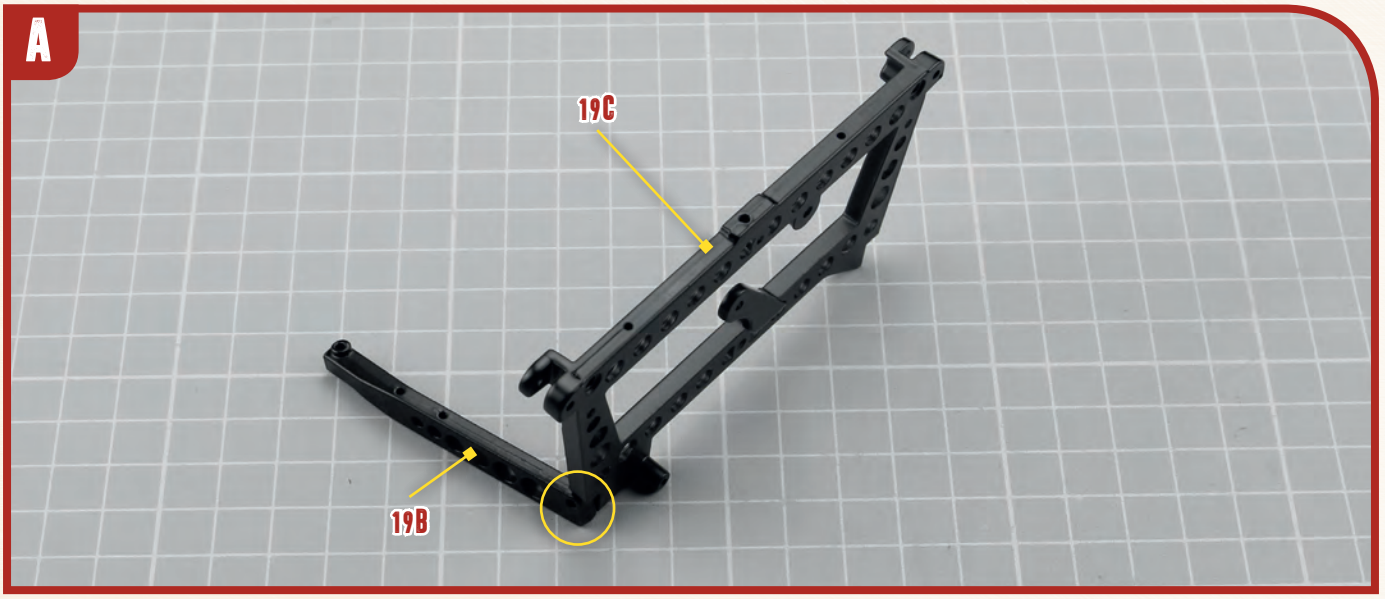

B

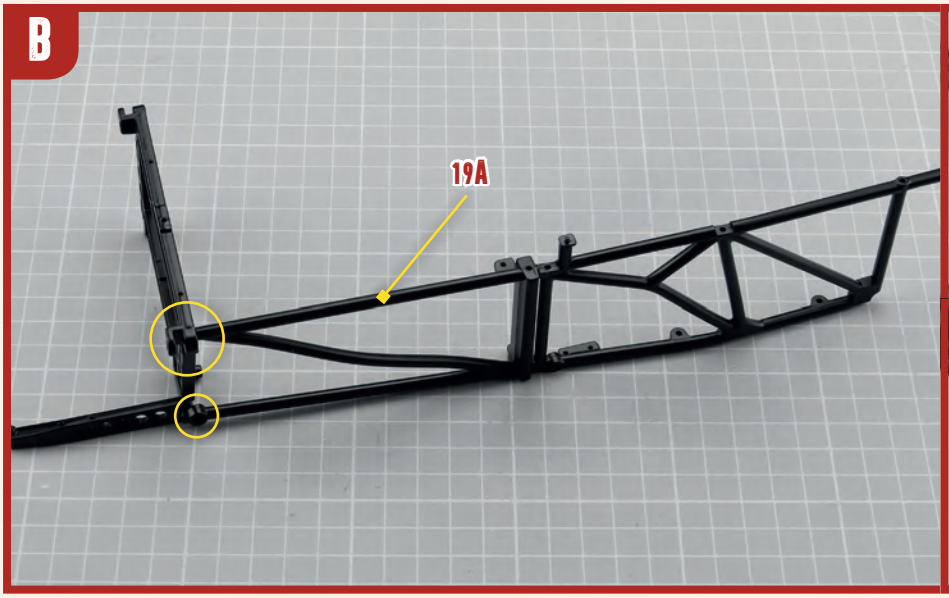





20 PARTS LIST

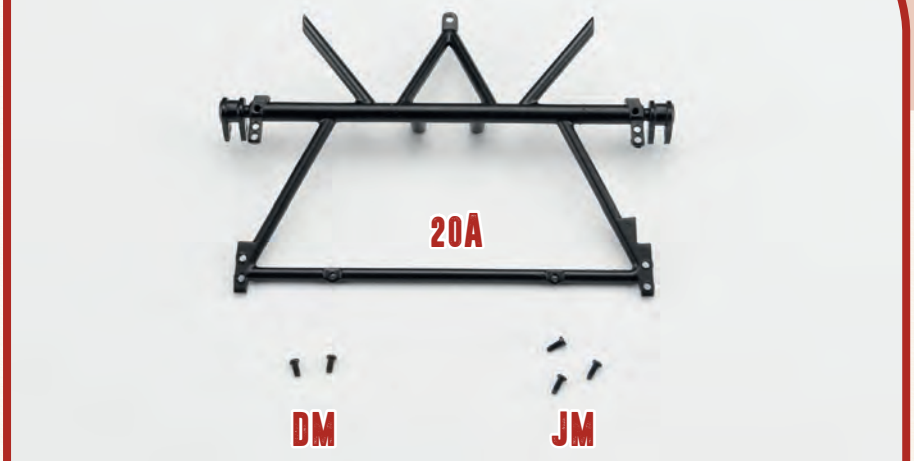

20A Rear axle support

DM 2 screws (2x4mm)
JM 3 screws (2x5mm)

A

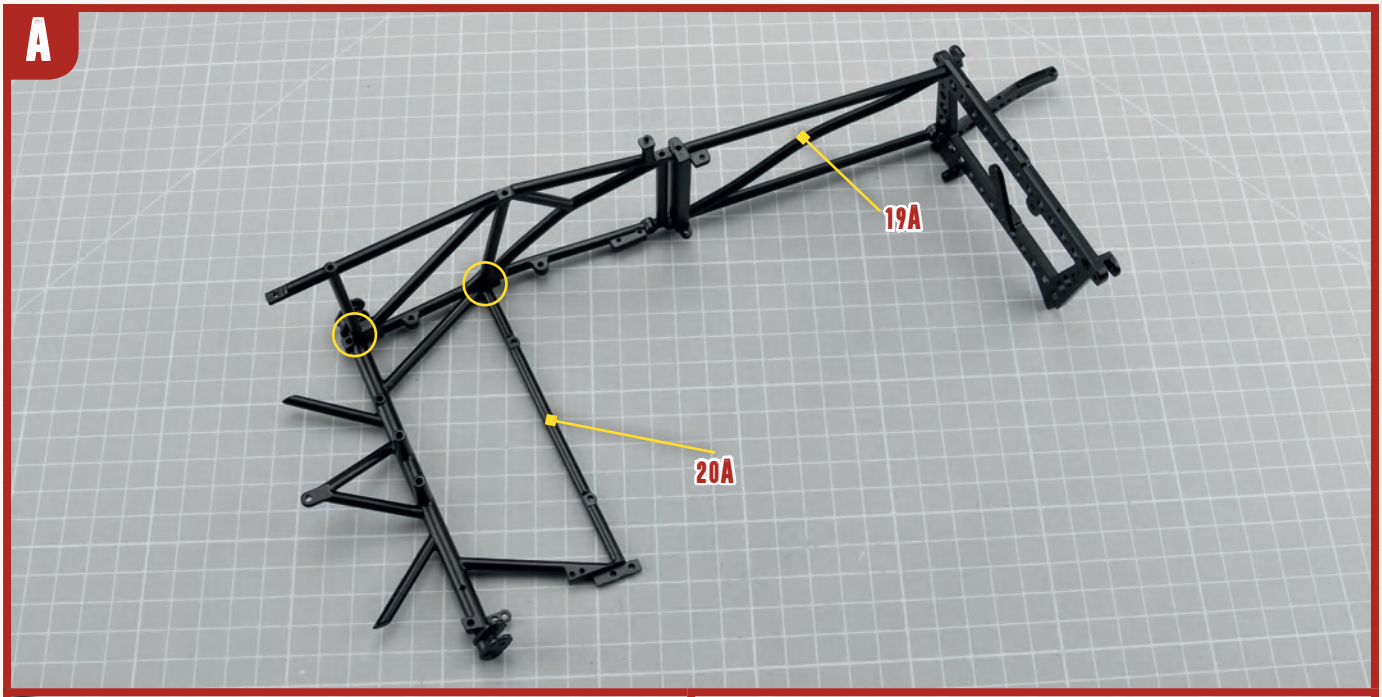

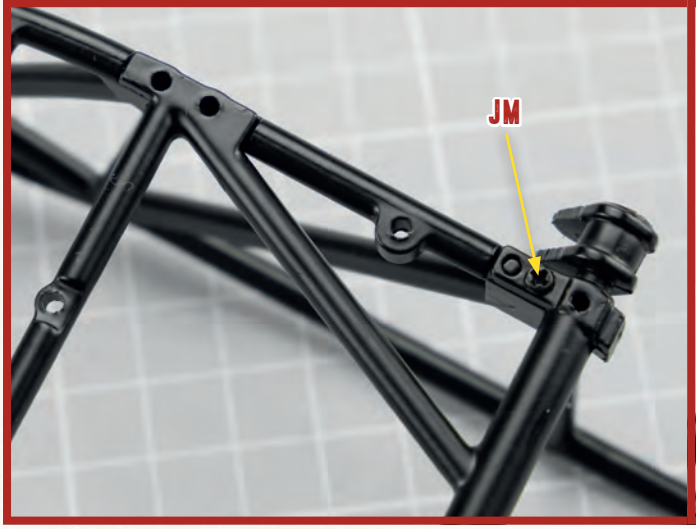

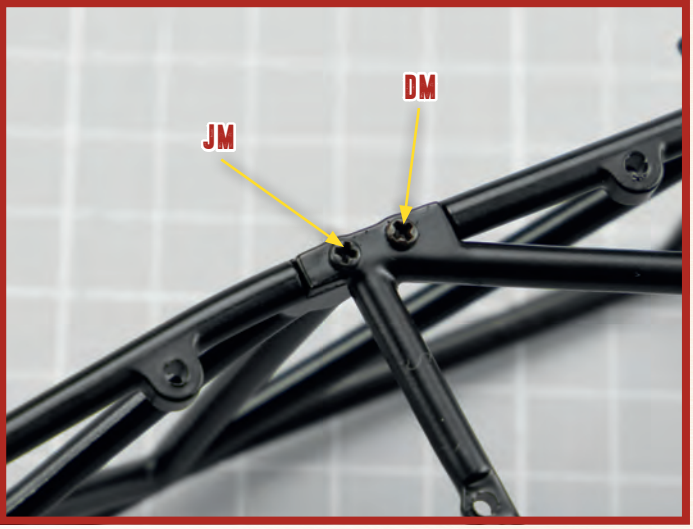

21 PARTS LIST

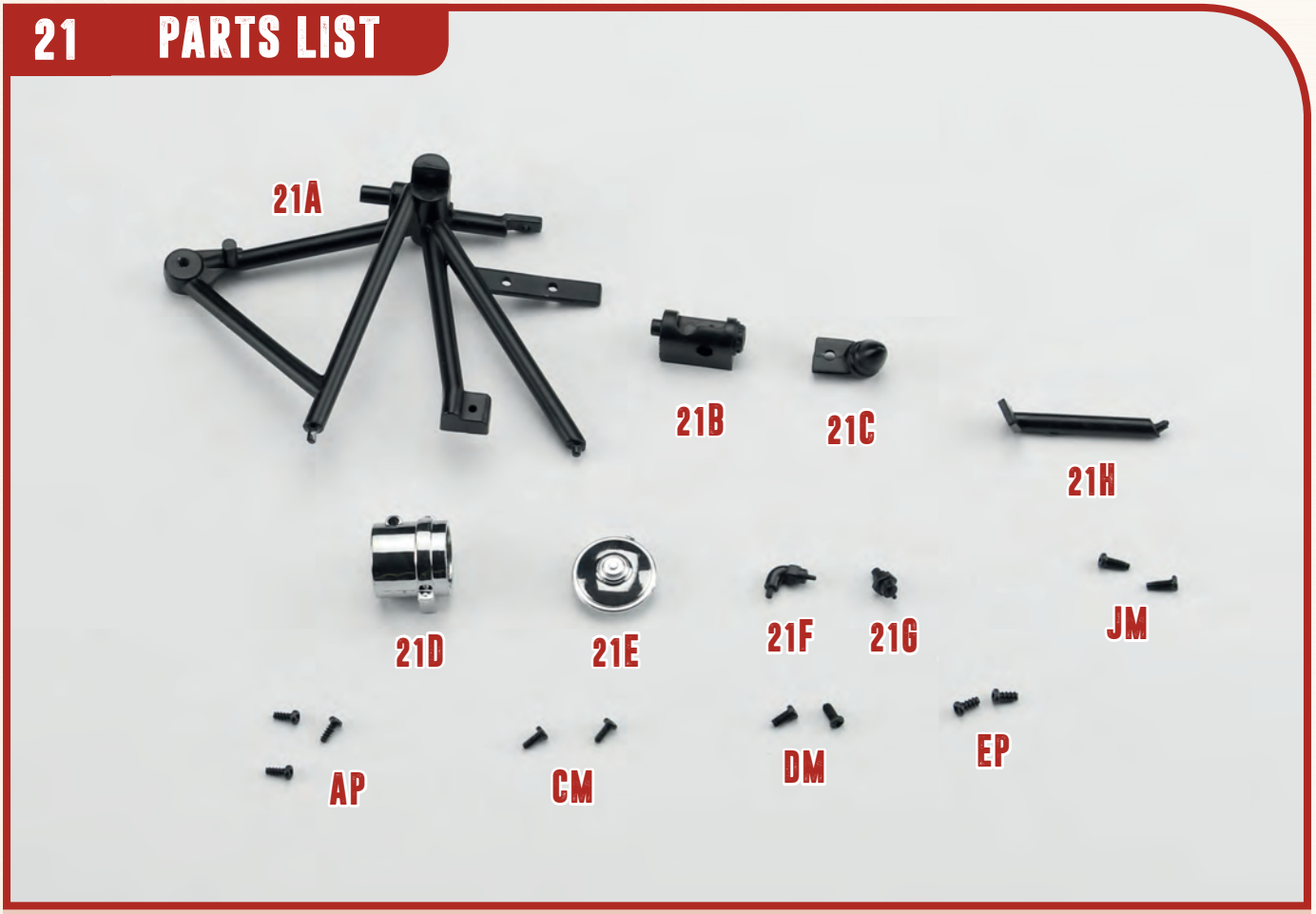

21A Chassis – rear left section
21B Torsion bar support bushing 1
21C Suspension lock 1
21D Compensating reservoir
21E Reservoir cover
21F Fuel lines connector 2
21G Fuel lines connector 3
21H Reservoir support

AP 3 screws (1.7x4mm)
EP 2 screws (2x4mm)
CM 2 screws (1.7x4mm)
DM 2 screws (2x4mm)
JM 2 screws (2x5mm)

A





B

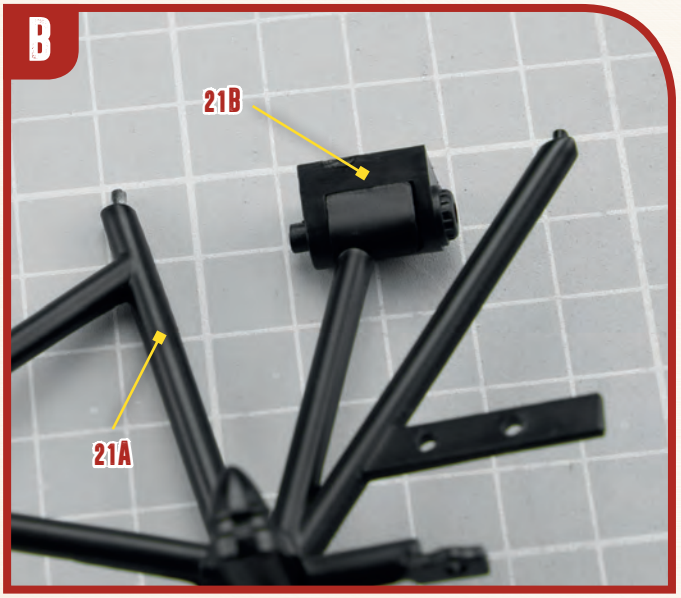

C

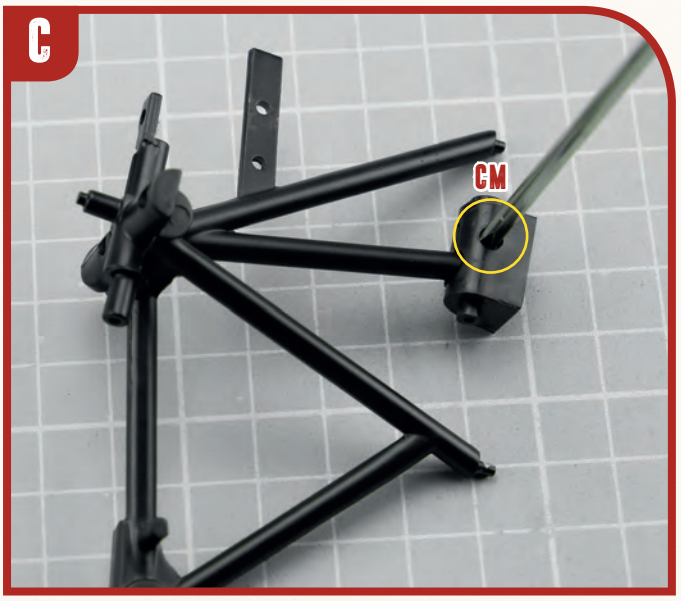

D

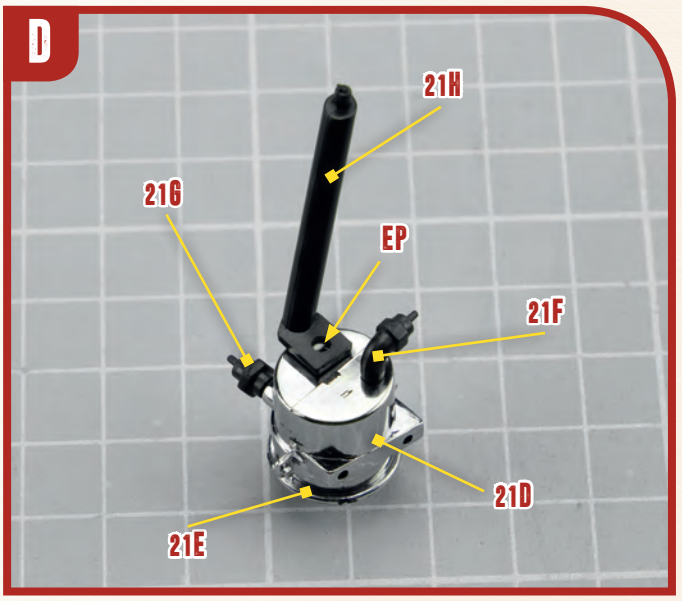

E

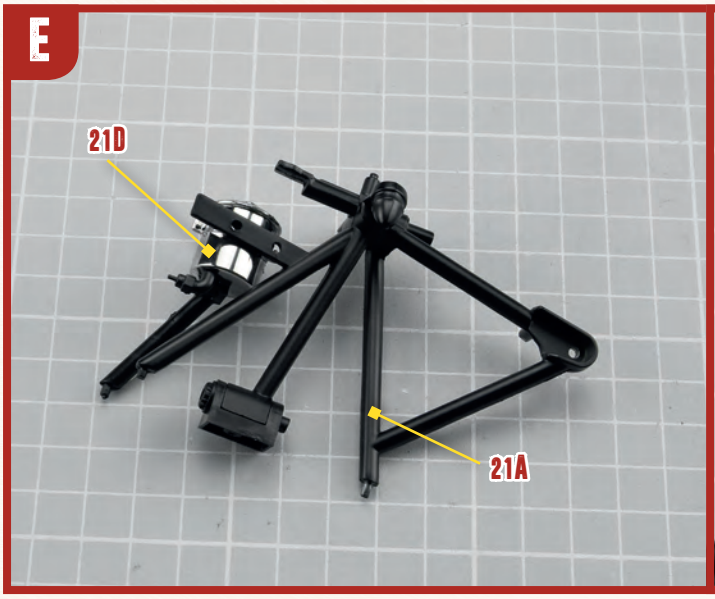

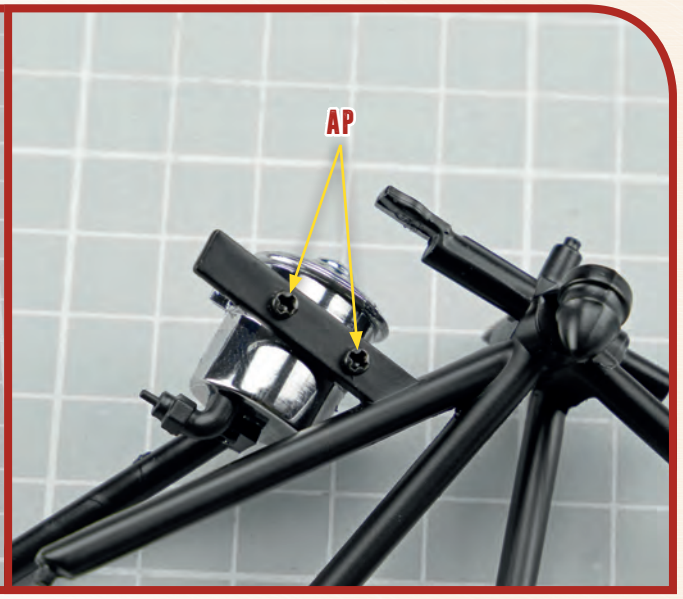

F

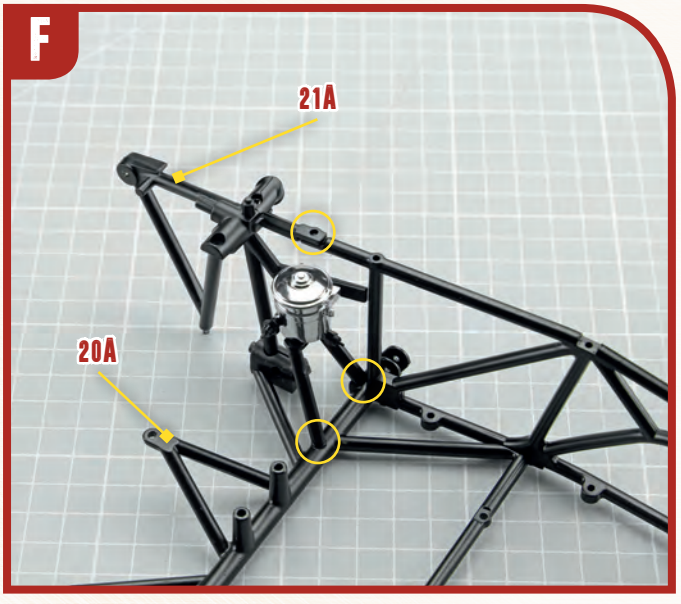

G



22 PARTS LIST



22A	Rear crossbeam	**AP**	3 screws (1.7x4mm)
22B	Chassis – rear right section	**CM**	2 screws (1.7x4mm)
22C	Torsion bar support bushing 2	**DM**	2 screws (2x4mm)
22D	Suspension lock 2	**HM**	3 screws (2.3x5mm)
22E	Fuel pump		

A

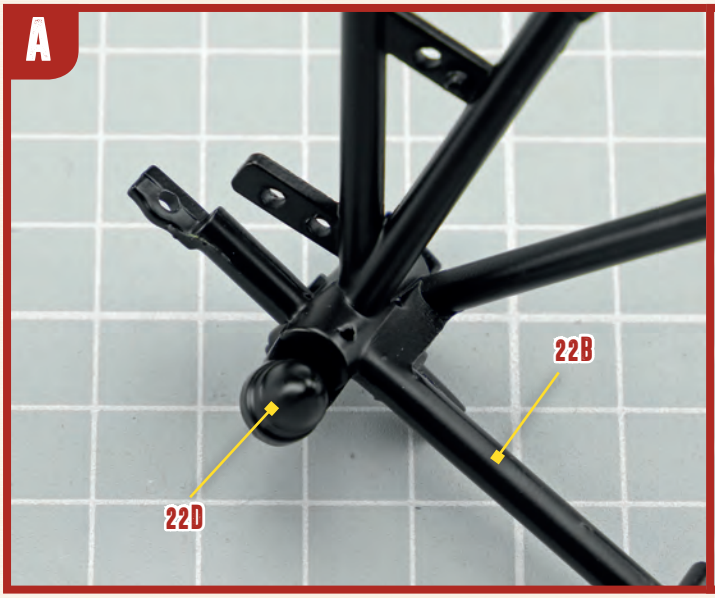



B

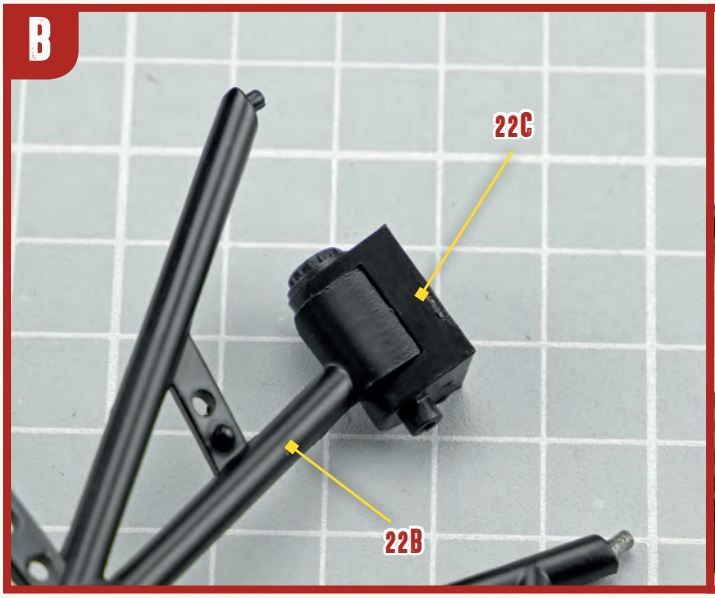

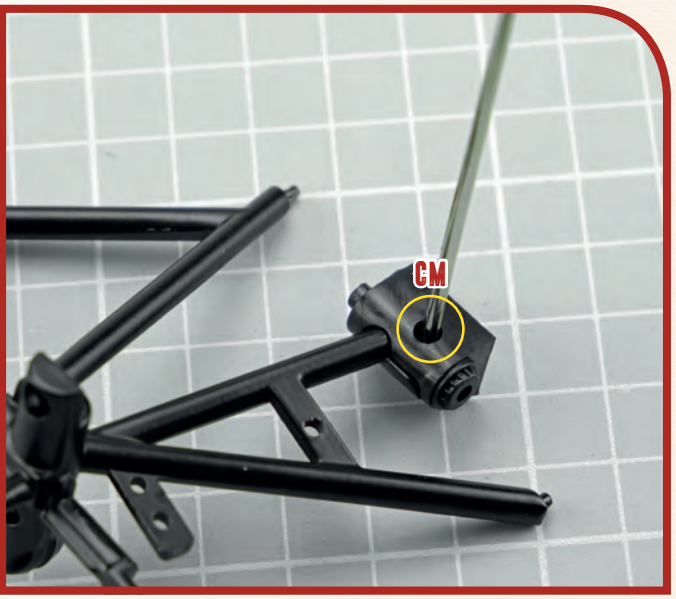

C

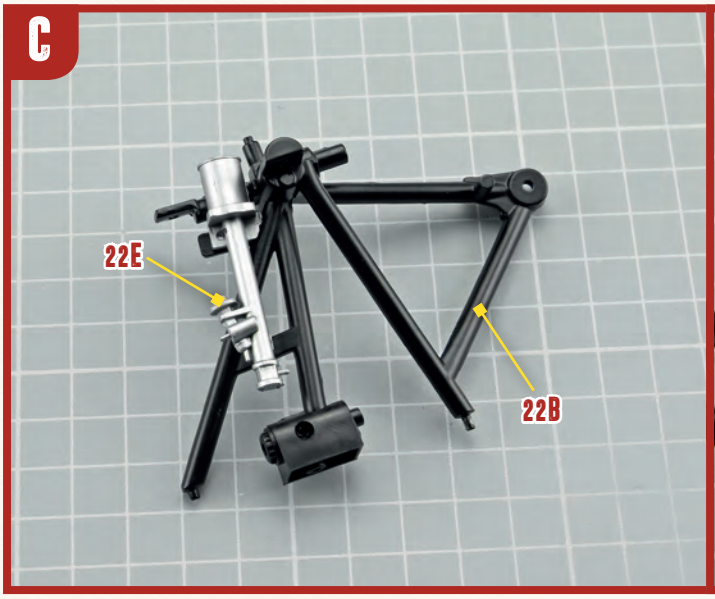

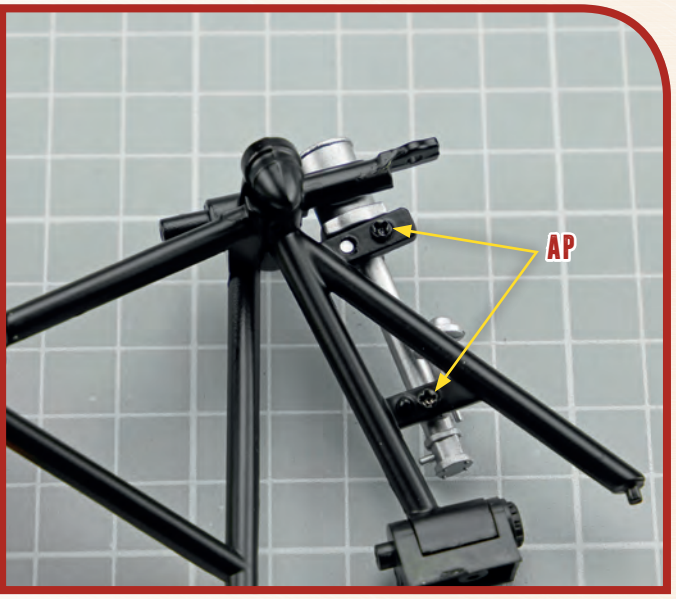

D

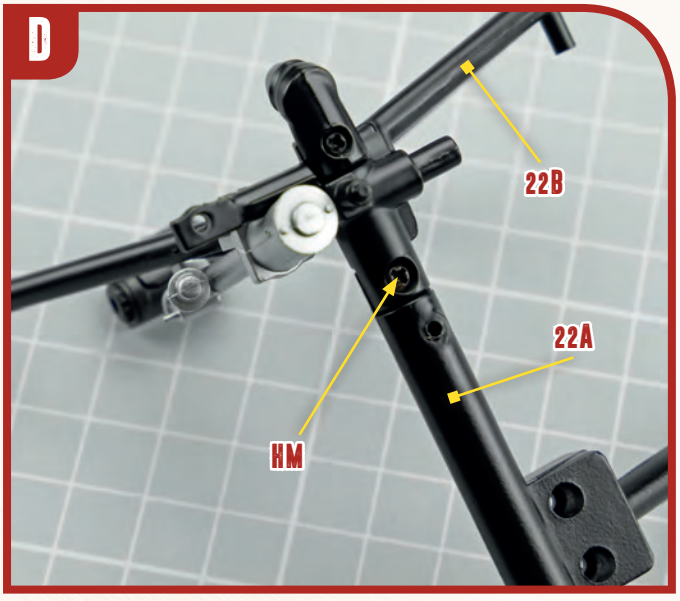

E

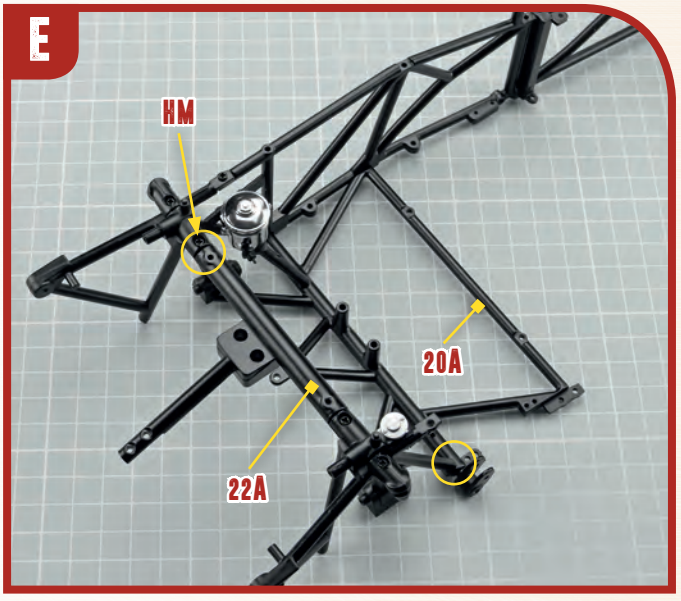

23 PARTS LIST

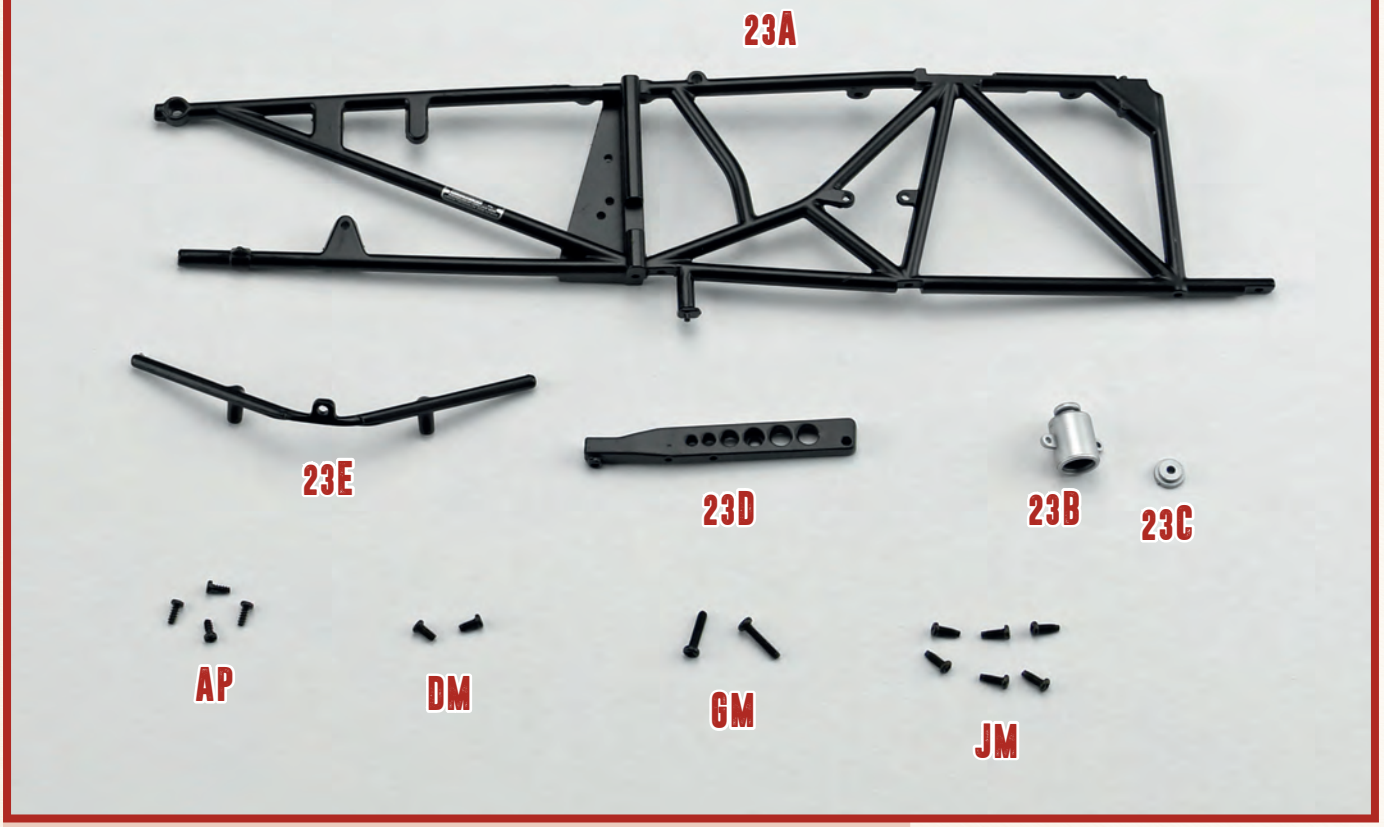

23A Chassis – right section
23B Brake fluid reservoir
23C Reservoir base
23D Radiator support (R)
23E Front crossbeam

AP 4 screws (1.7x4mm)
DM 2 screws (2x4mm)
GM 2 screws (2x10mm)
JM 6 screws (2x5mm)

A

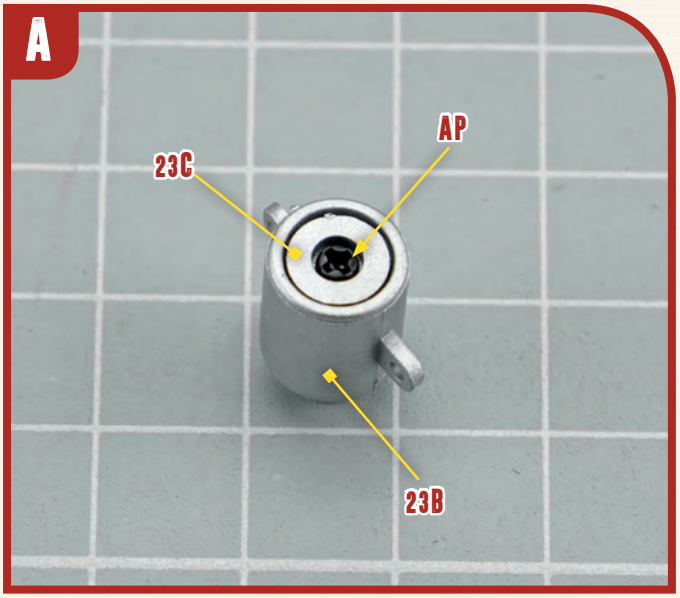

B

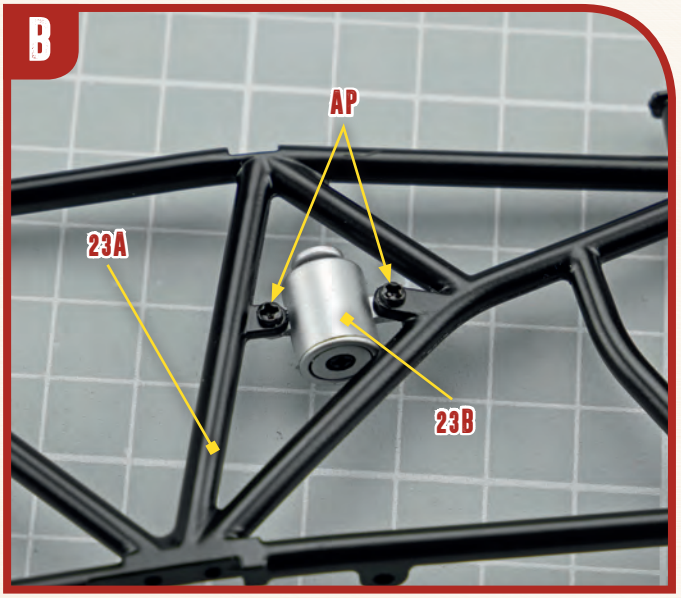

C

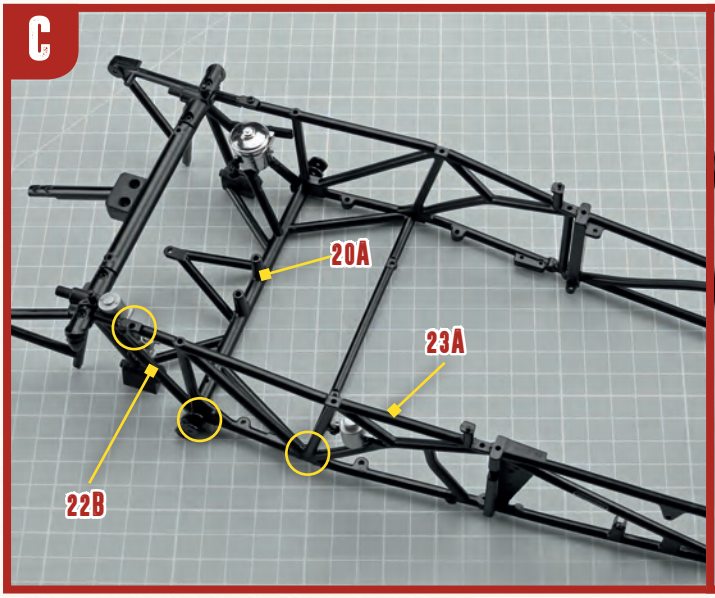
20A
23A
22B

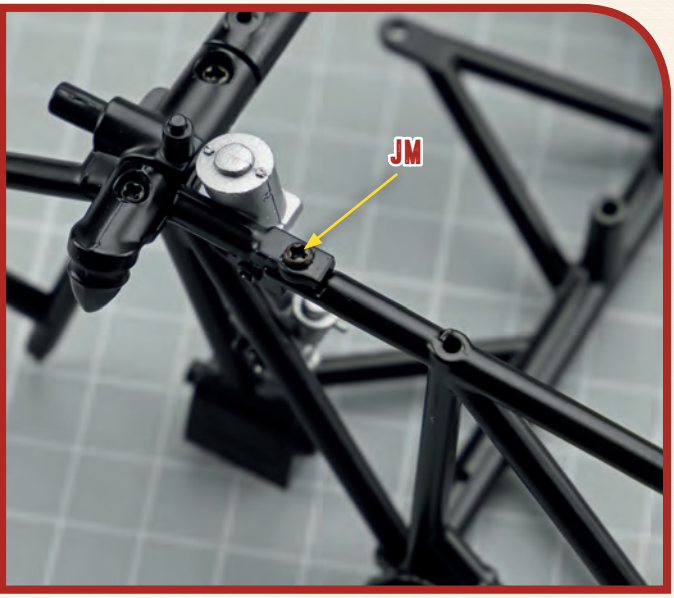
JM

D

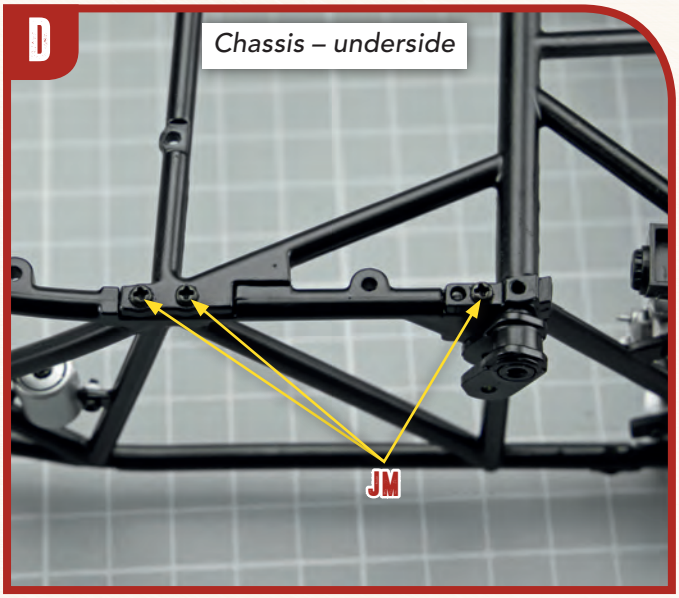
Chassis – underside
JM

E

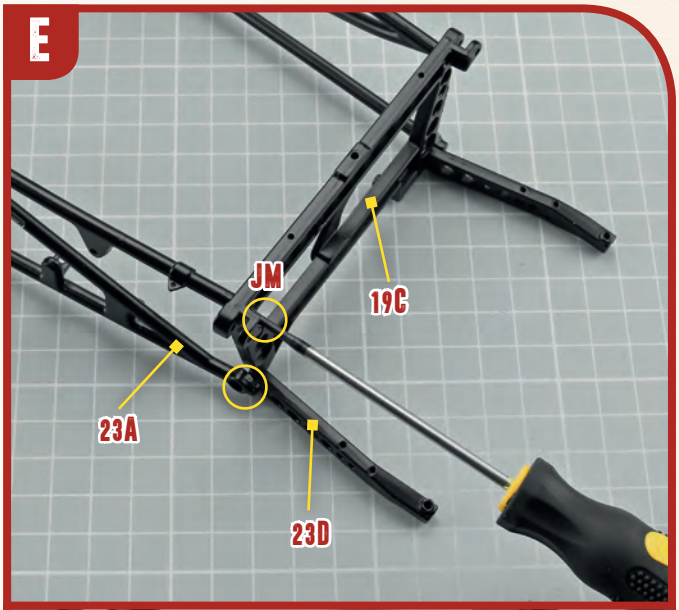
JM
19C
23A
23D

F

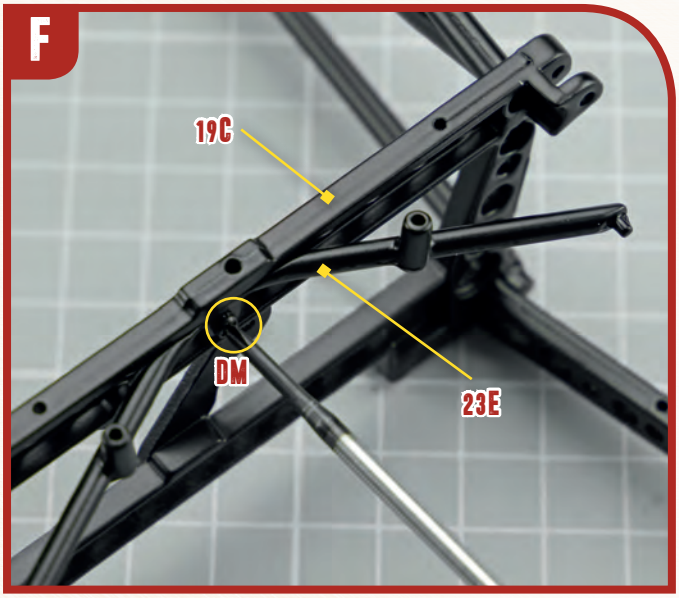
19C
DM
23E

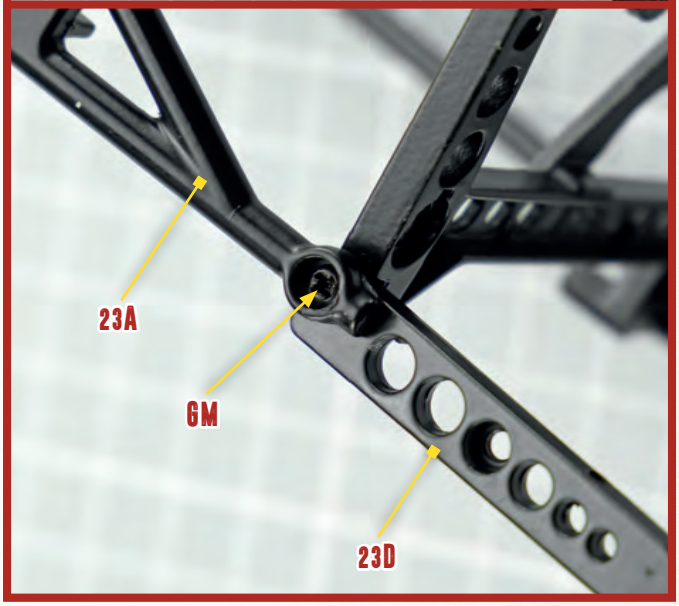
23A
6M
23D

24 PARTS LIST

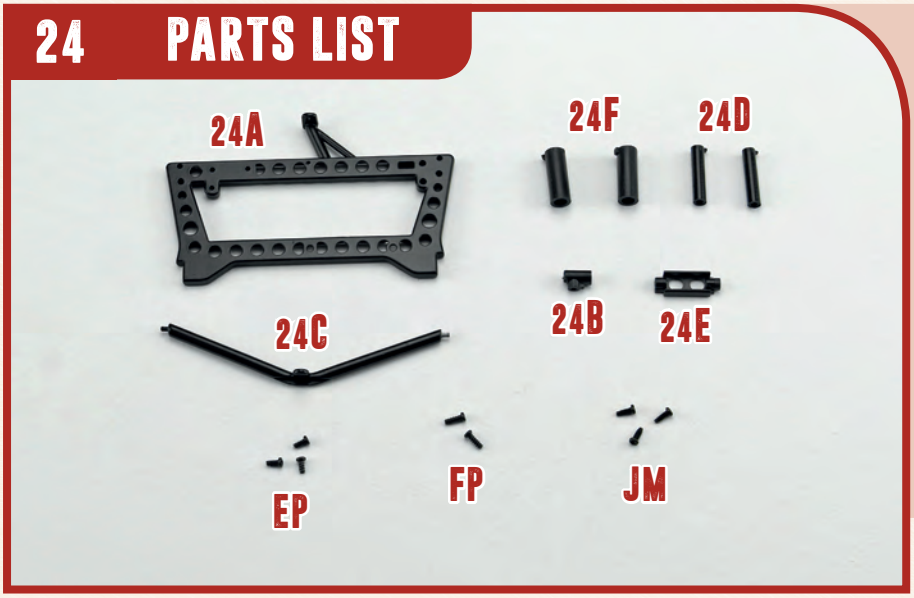

24A	Front suspension support 2
24B	Steering support
24C	Front lower crossbeam
24D	Front suspension upper arm axles (x2)
24E	Reinforcement panel
24F	Front torsion bar support bushings (x2)
EP	3 screws (2x4mm)
FP	2 screws (2x6mm)
JM	3 screws (2x5mm)

A

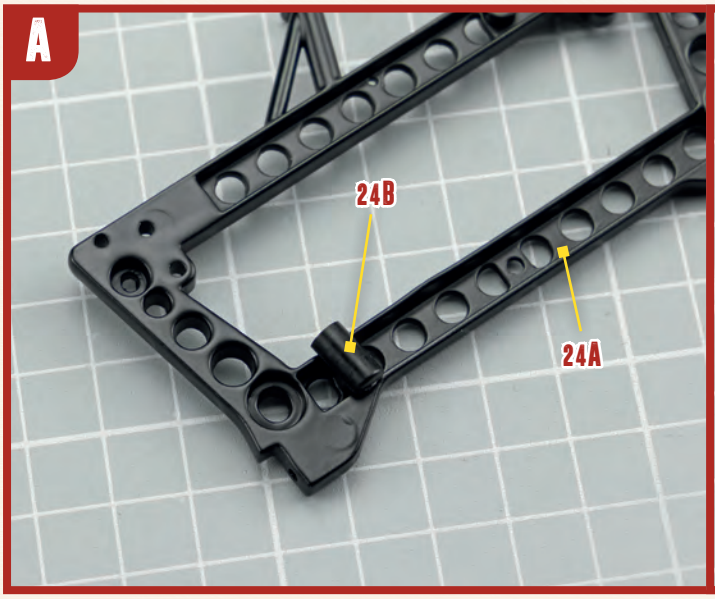

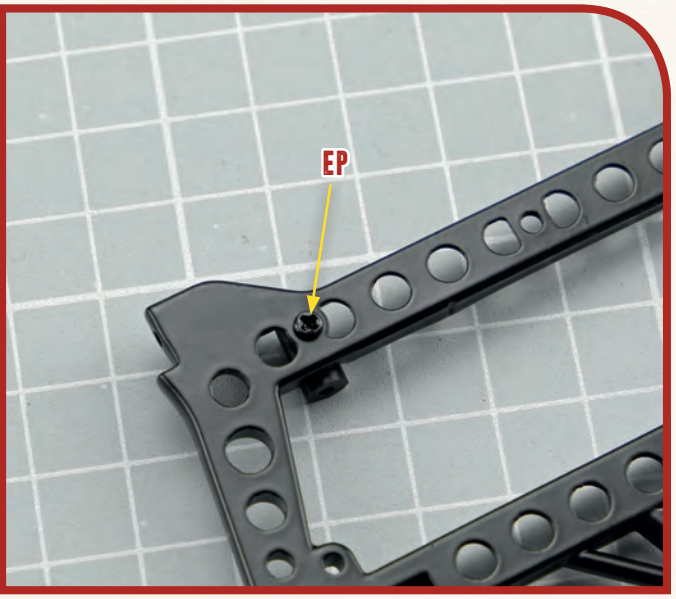

B

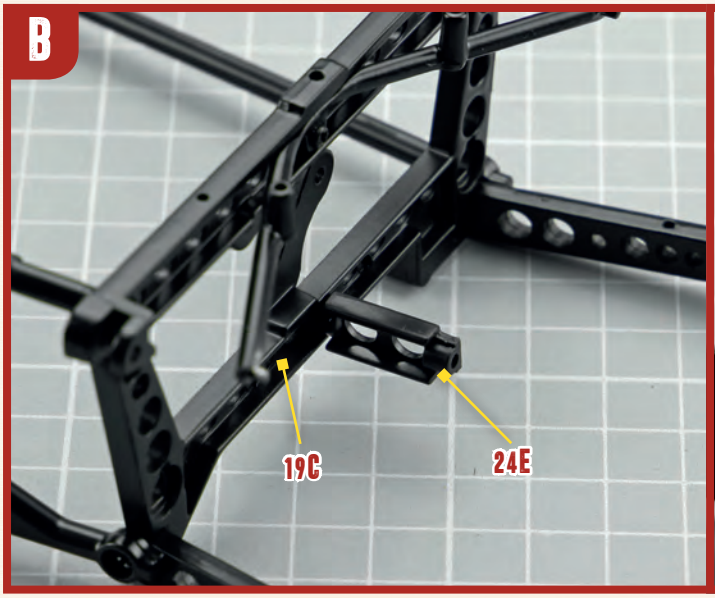

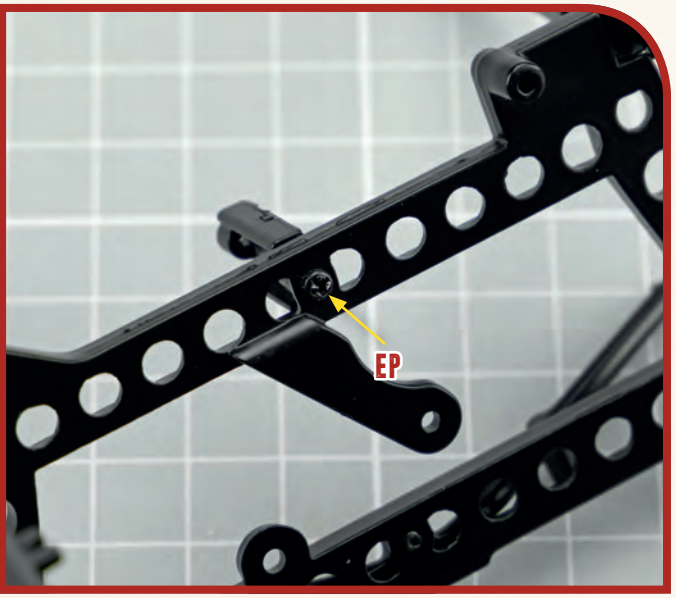

C

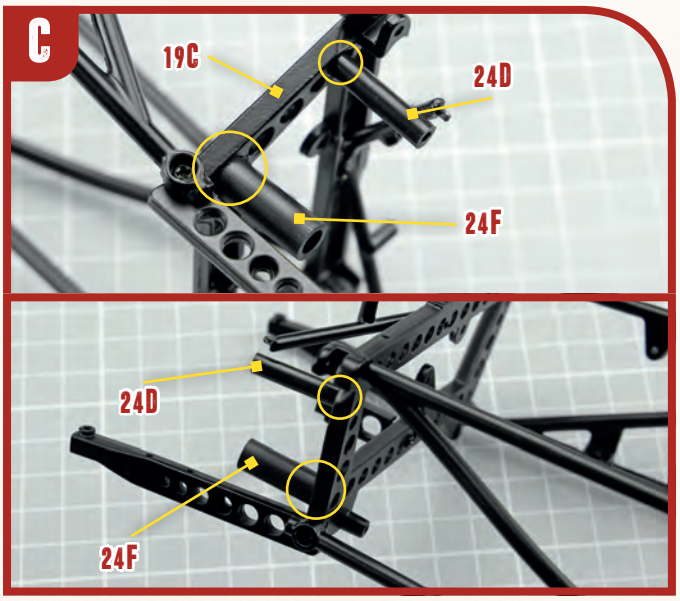

D

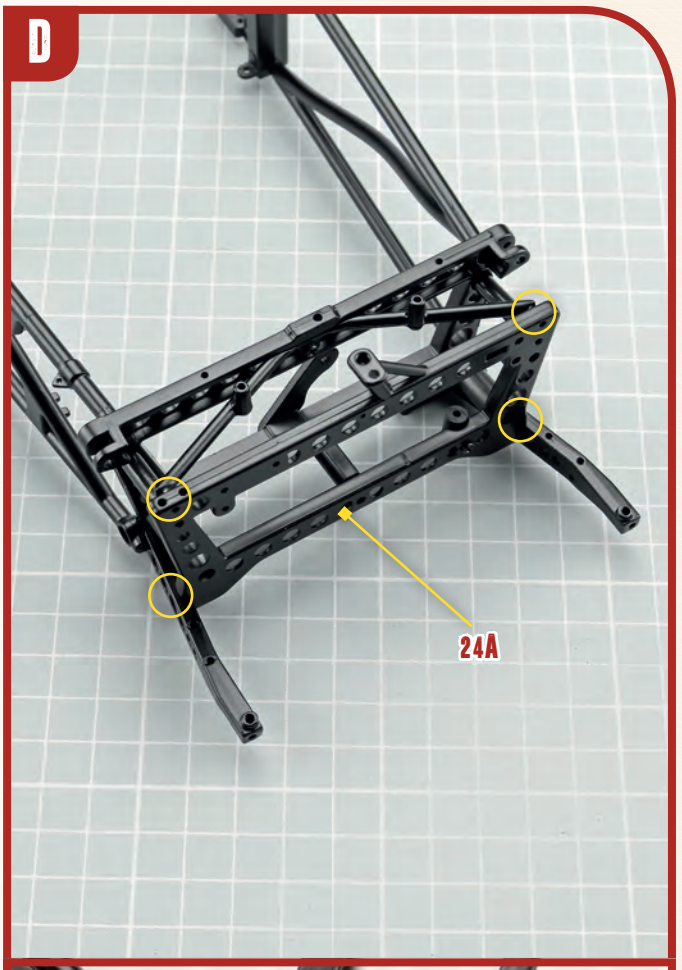

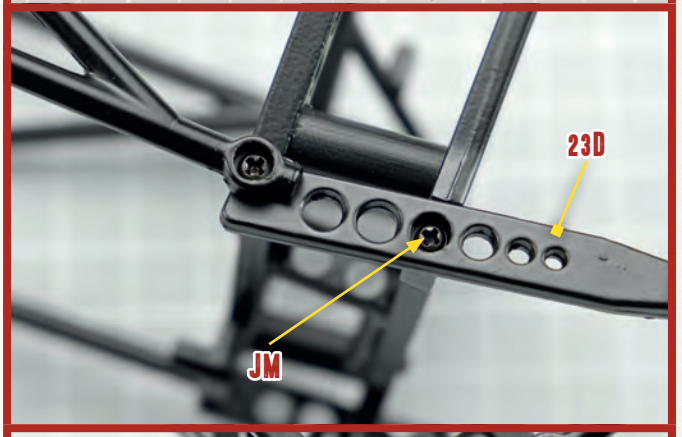

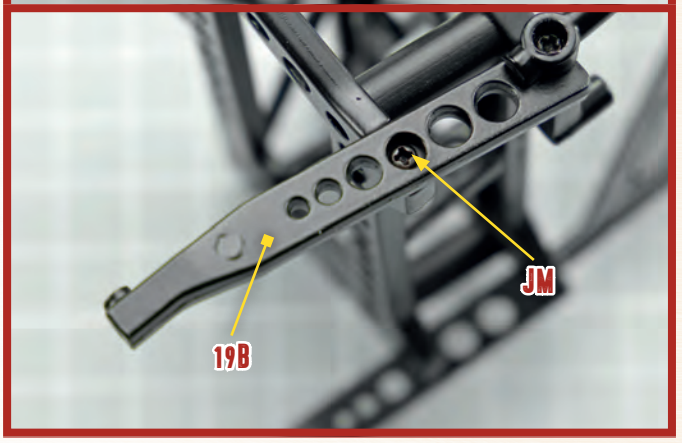

E

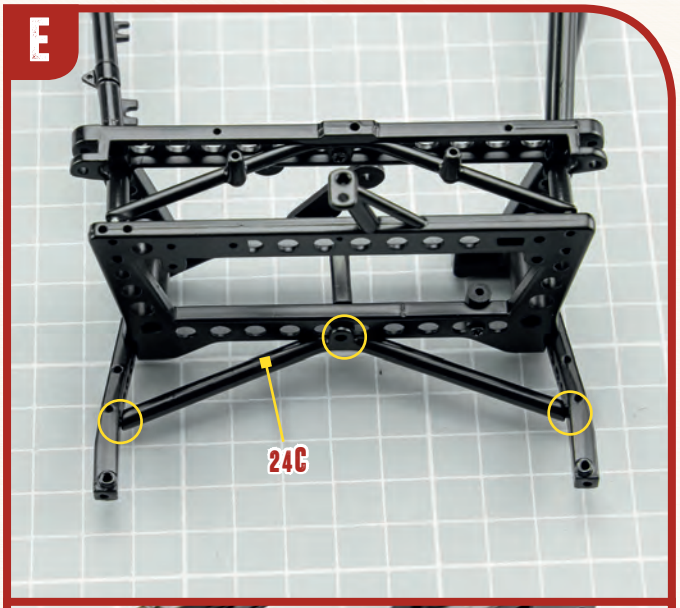

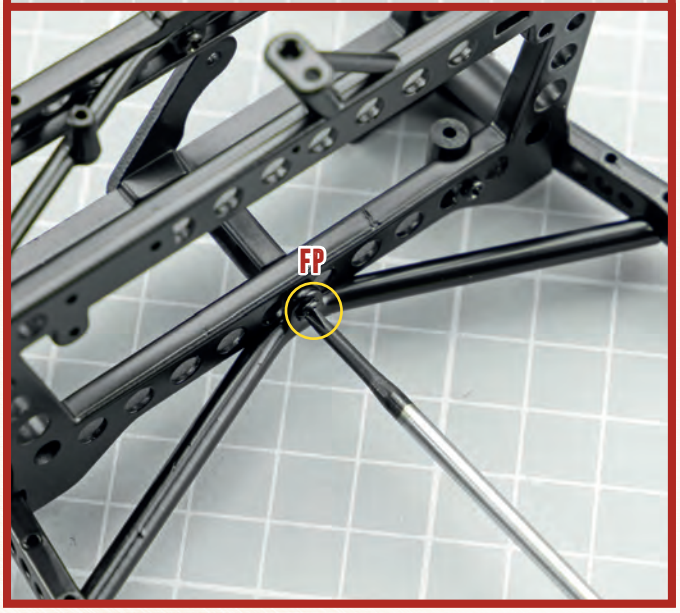

25 PARTS LIST

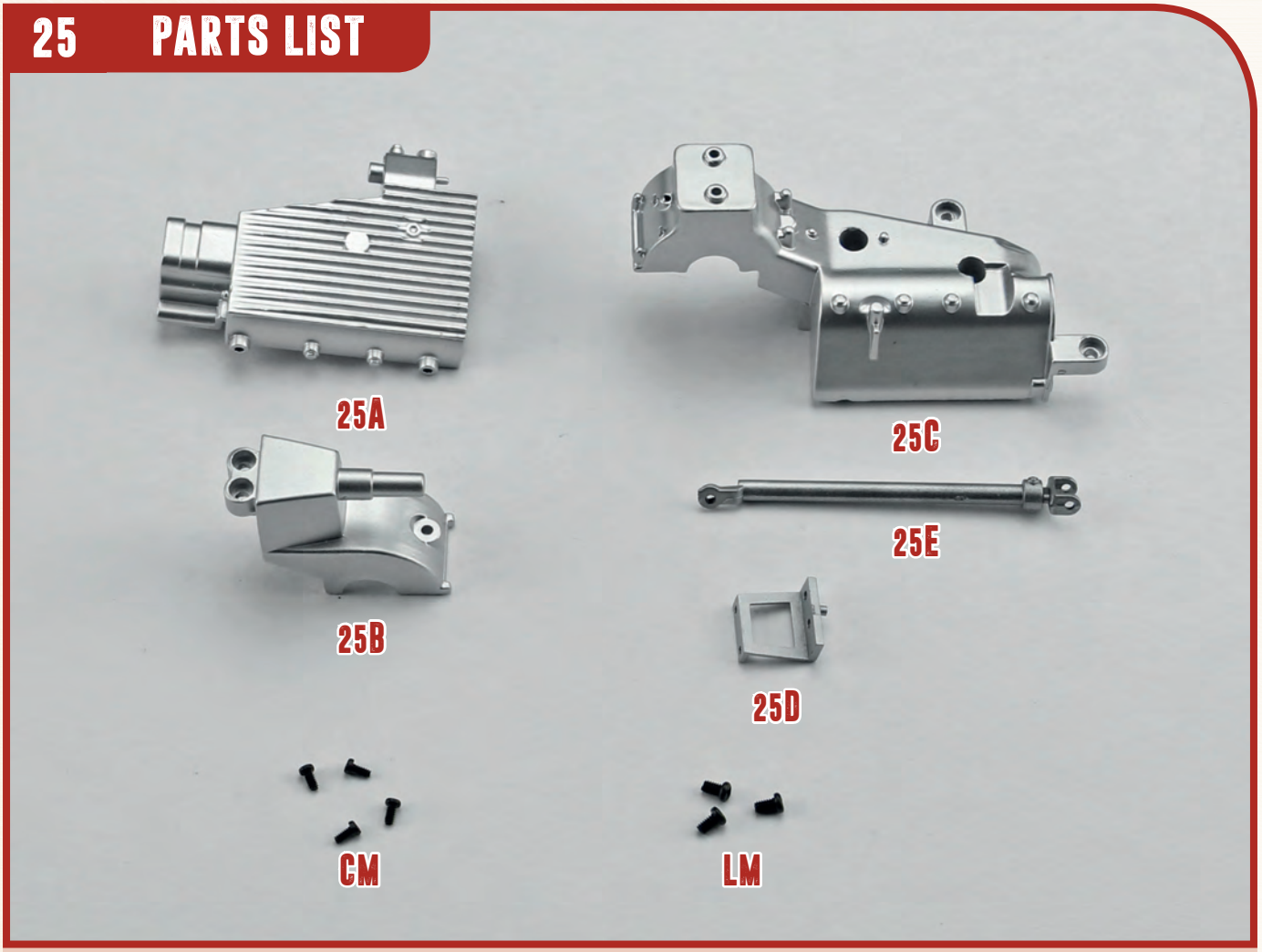

23A Gearbox part A
23B Gearbox part B
23C Gearbox part C
23D Gearbox rear support
23E Rear transmission shaft
CM 4 screws (1.7x4mm)
LM 3 screws (2.3x4mm)

A

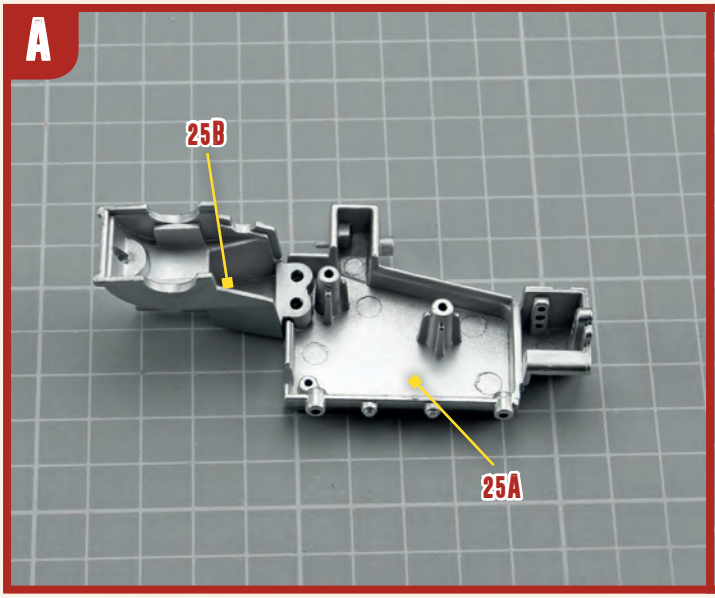

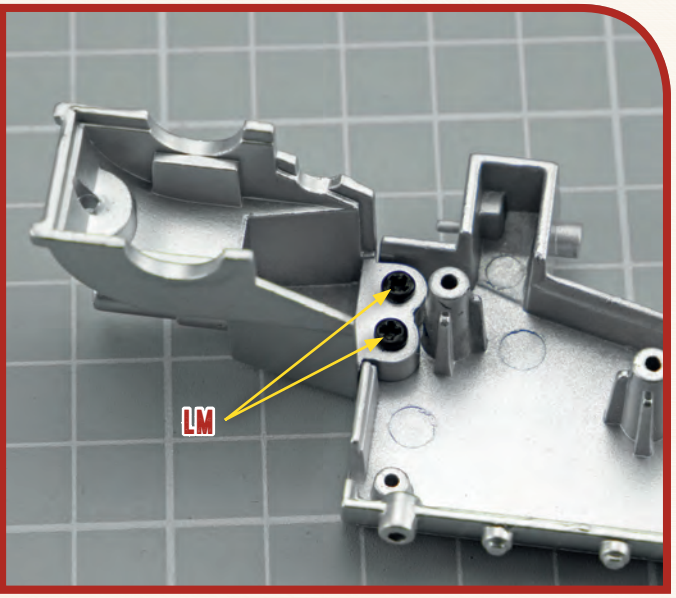

C

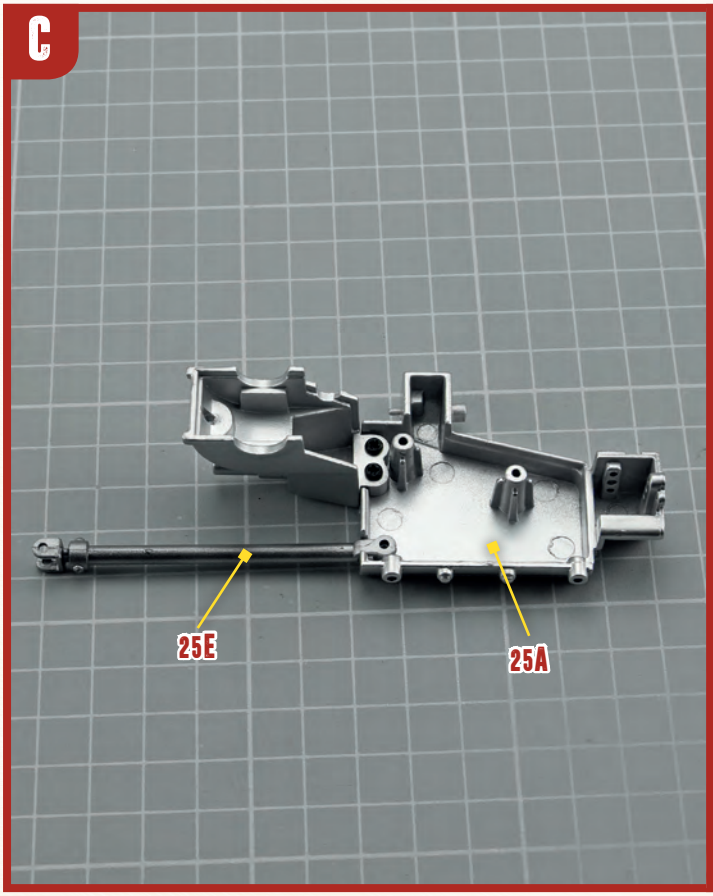

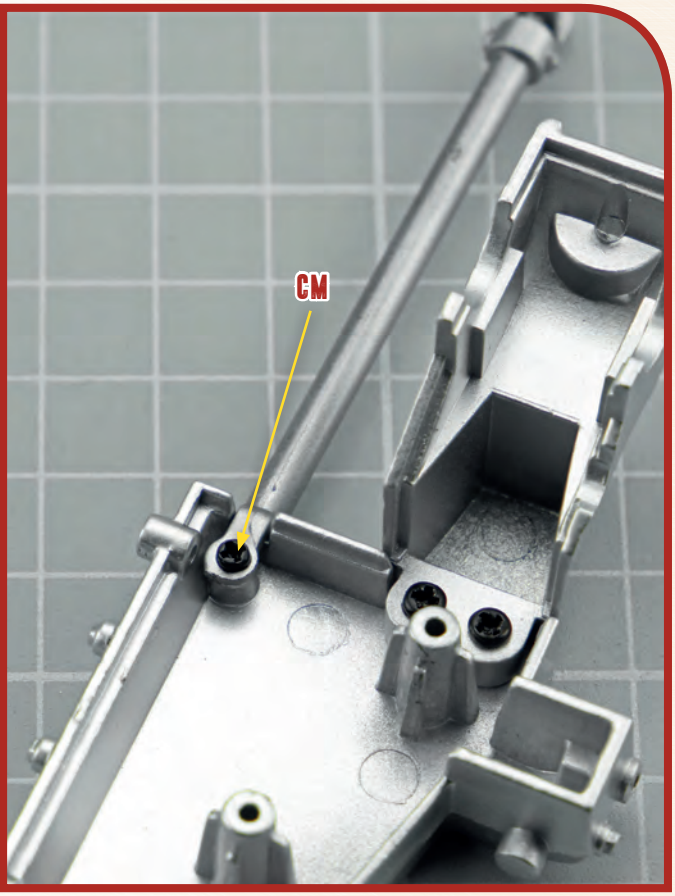

D

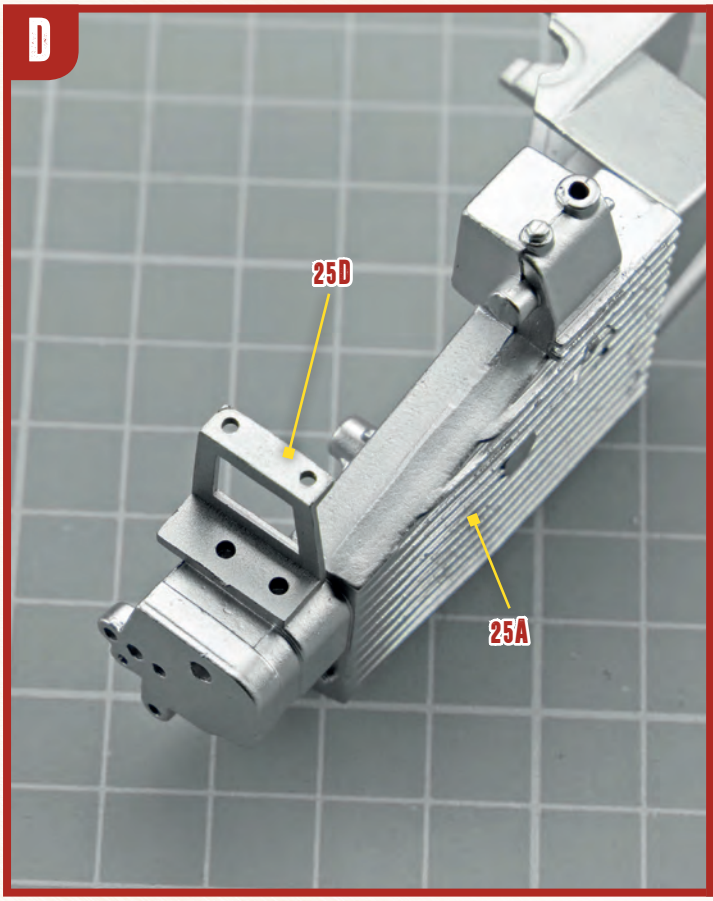

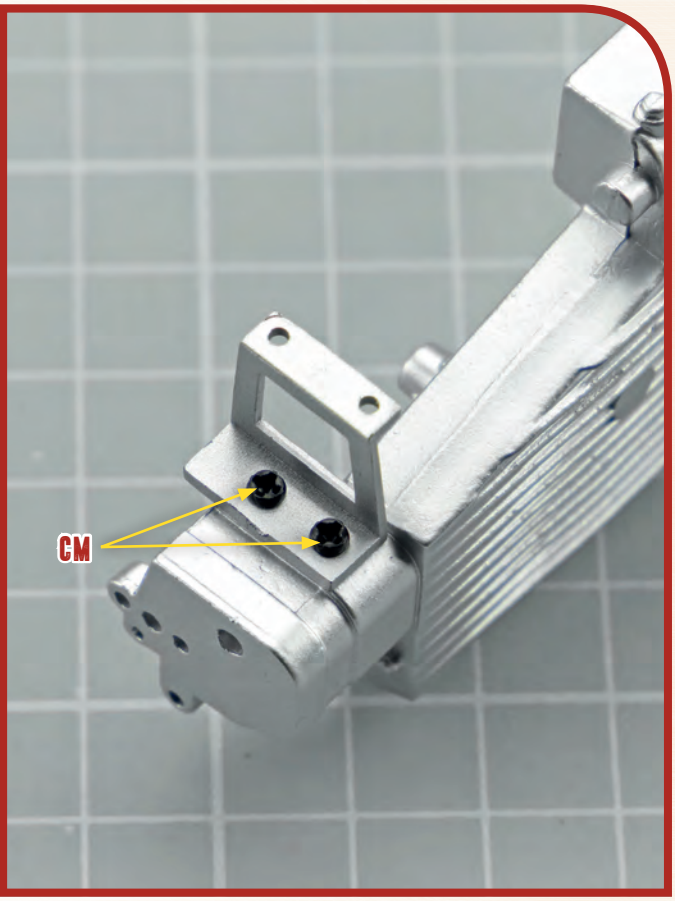

26 PARTS LIST

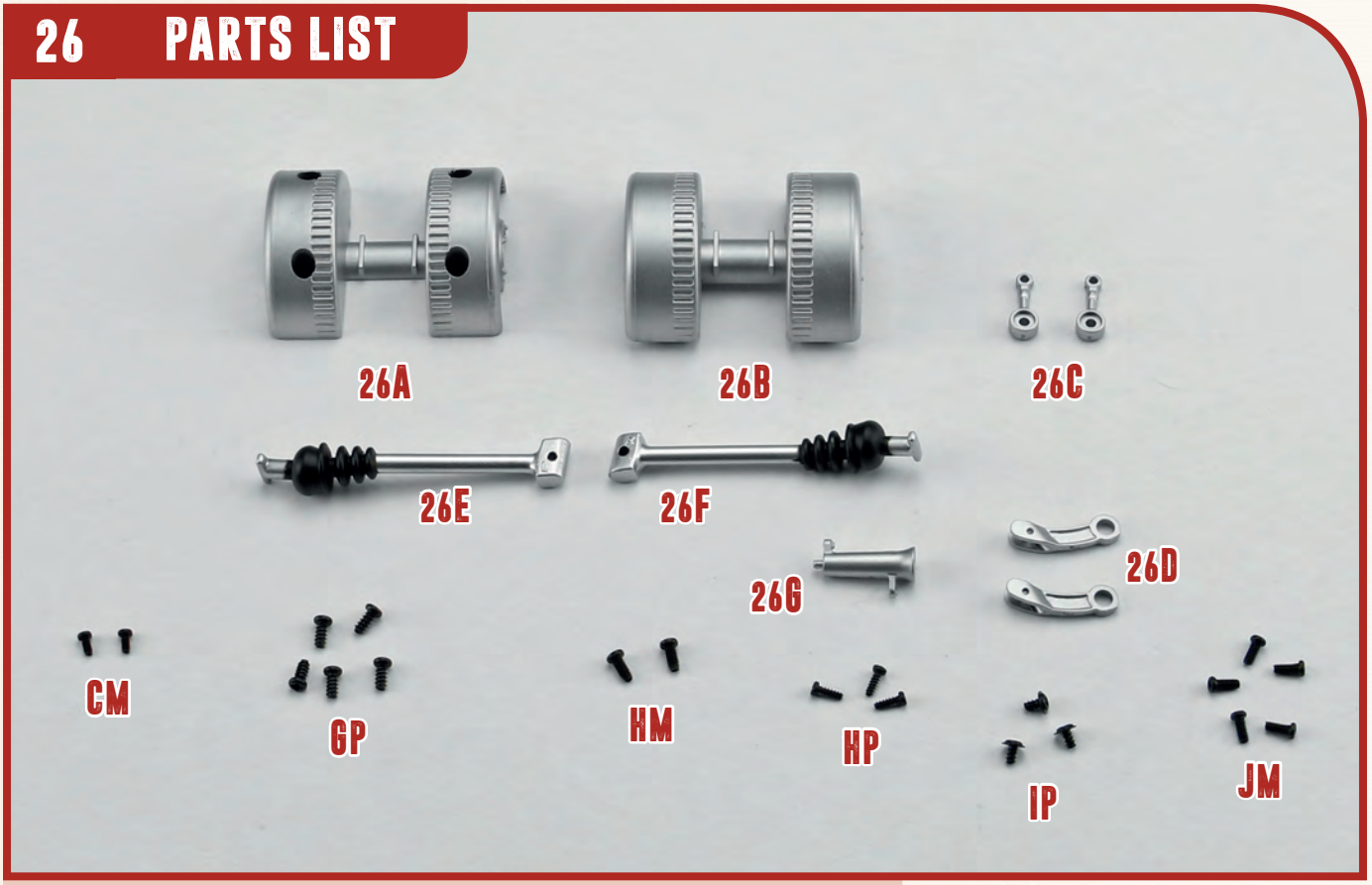

26A Rear brake drums part A
26B Rear brake drums part B
26C Rear suspension levers (x2)
26D Rear suspension arms (x2)
26E Driveshaft (L)
26F Driveshaft (R)
26G External ignition adapter

GP 5 screws (2.3x5mm)
HP 3 screws (1.7x5mm)
IP 3 screws (2x4x6mm)
CM 2 screws (1.7x4mm)
HM 2 screws (2.3x5mm)
JM 5 screws (2x5mm)

A

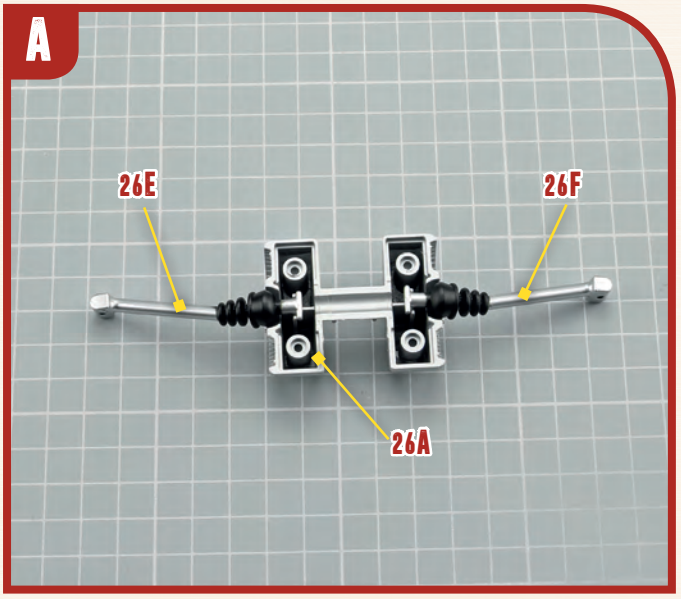

B

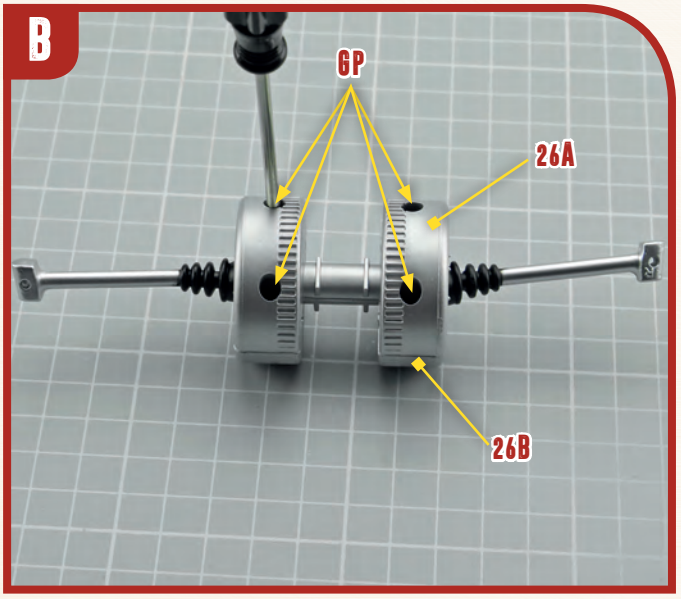

C

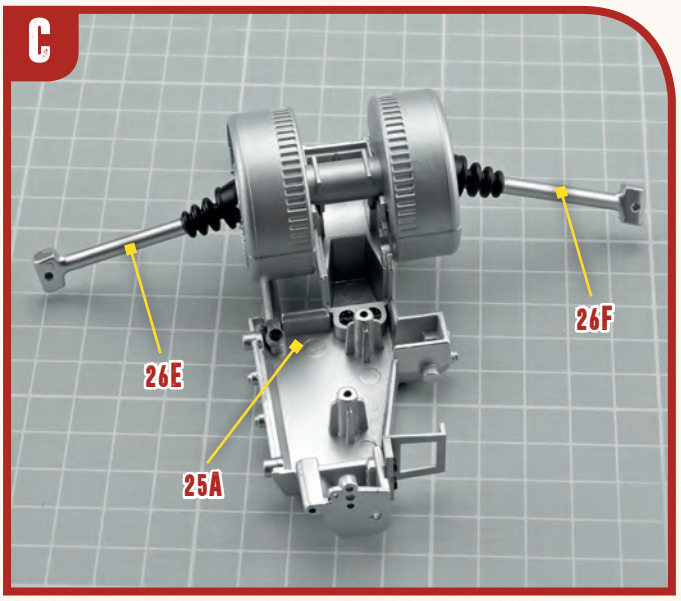

D

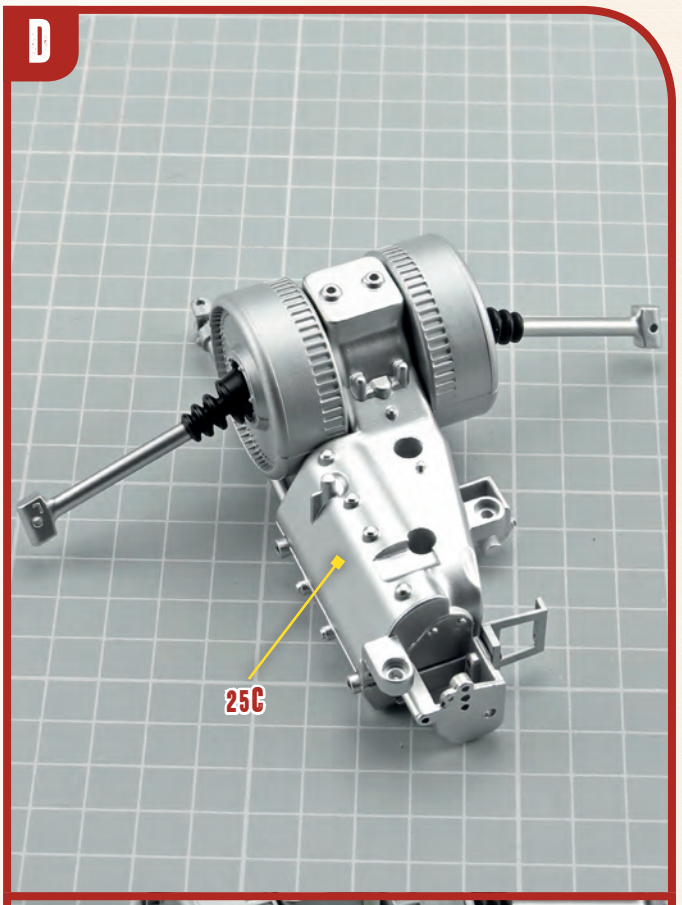

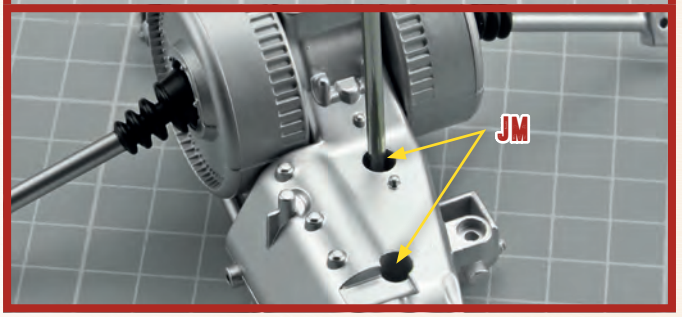

E

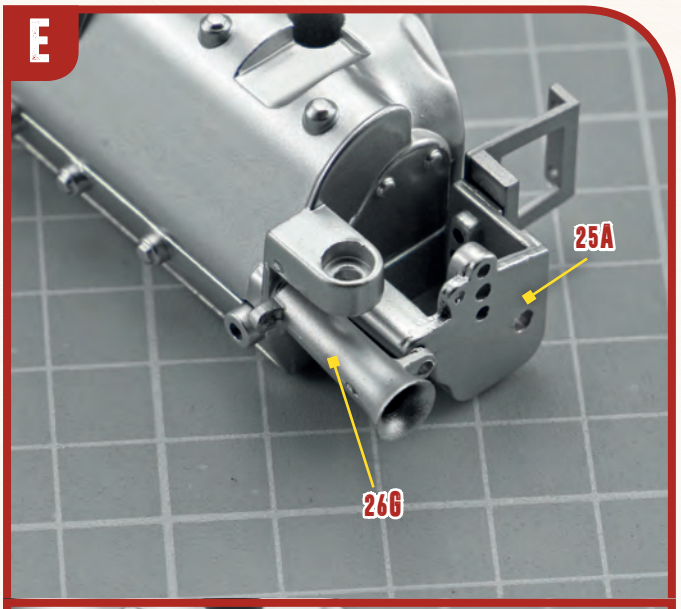

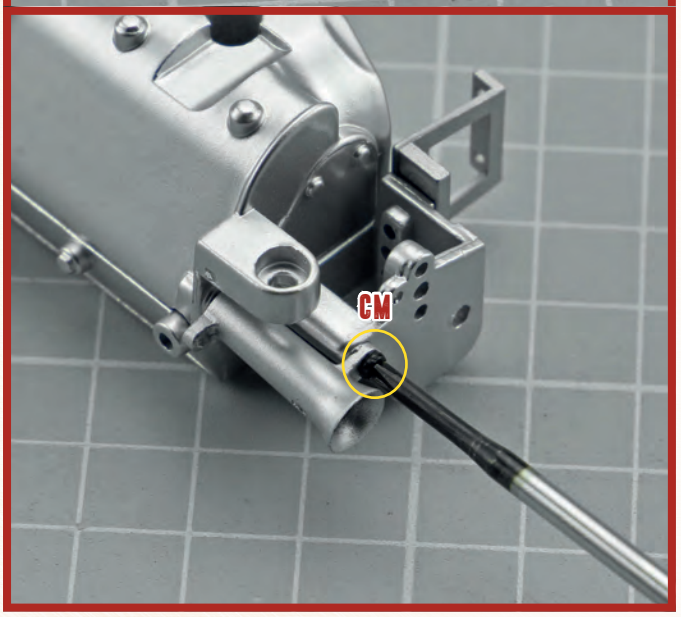

F

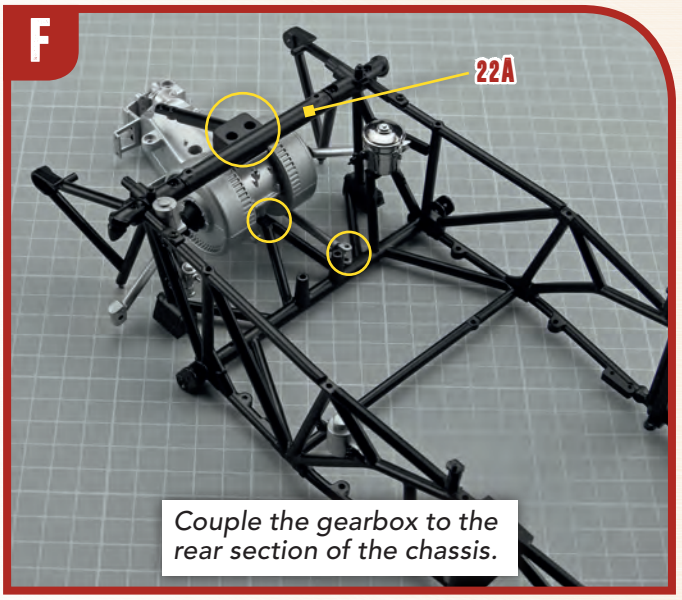

Couple the gearbox to the rear section of the chassis.

G

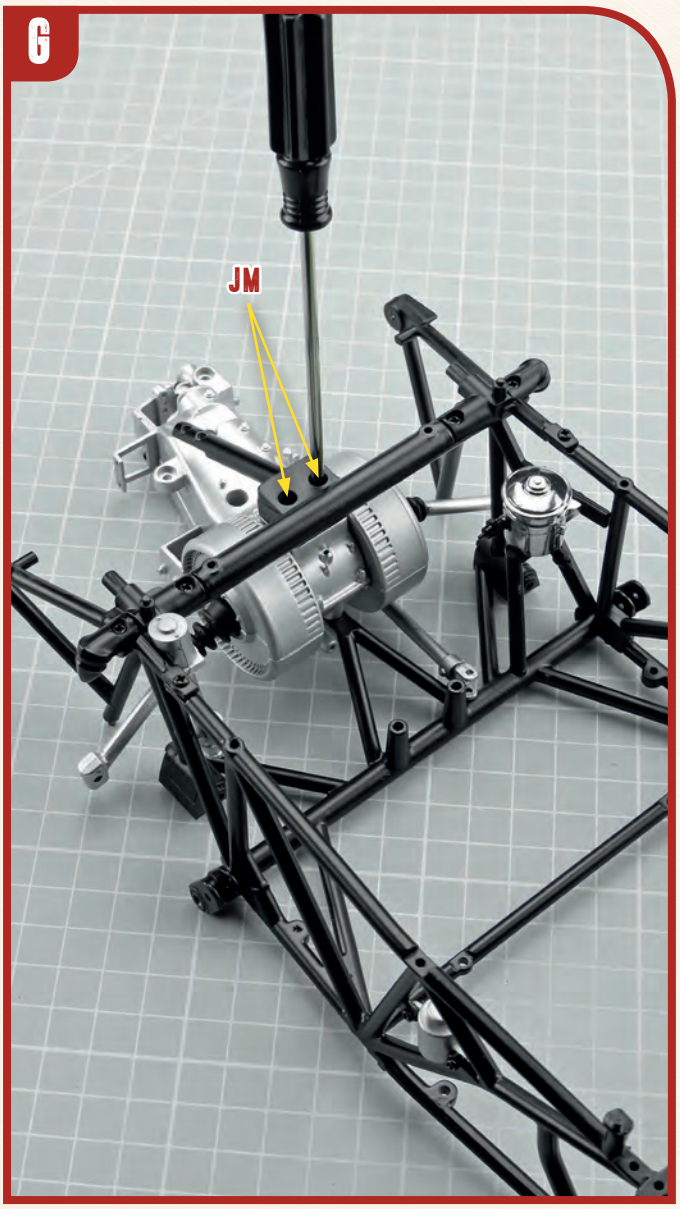

H

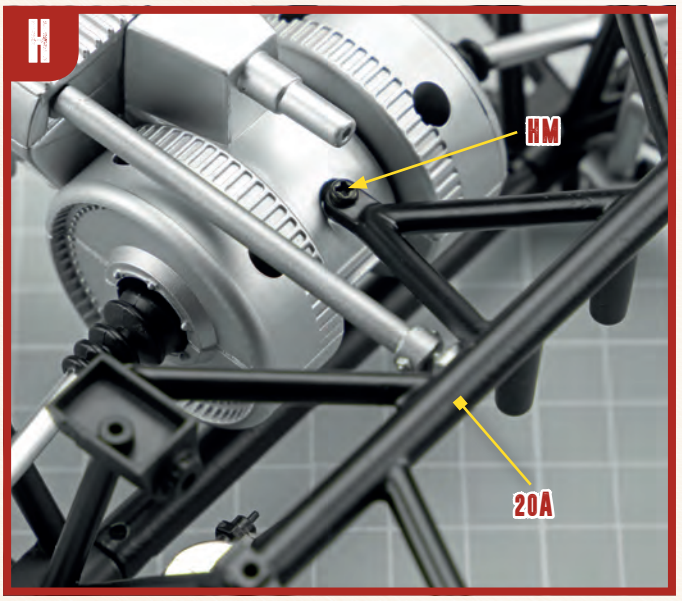

I

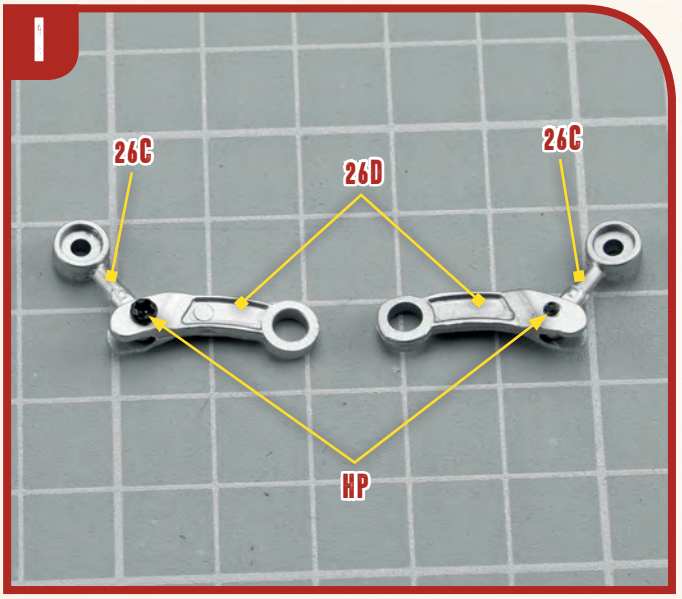

J

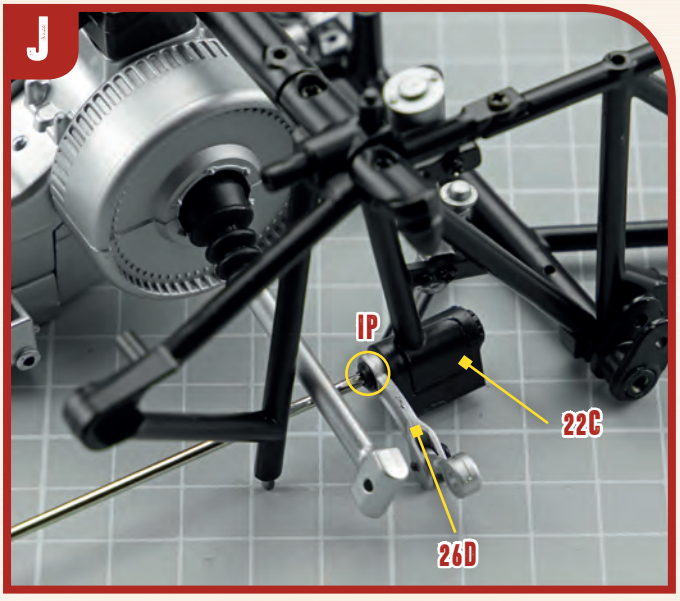

K

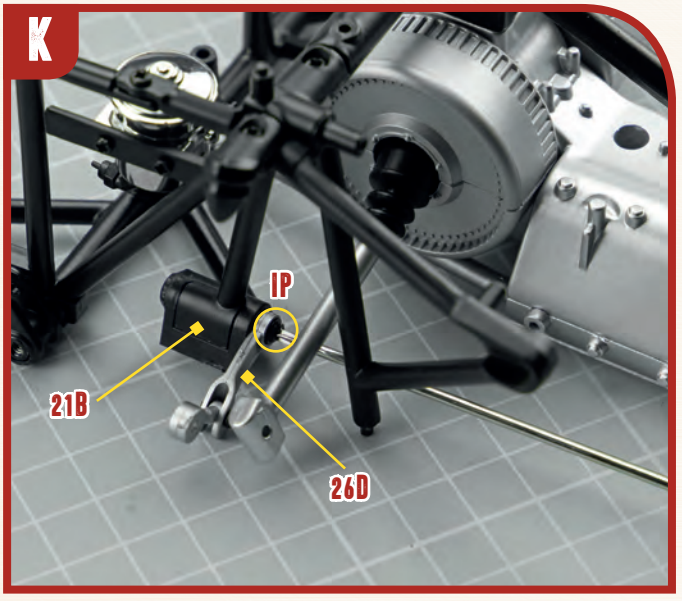

27 PARTS LIST

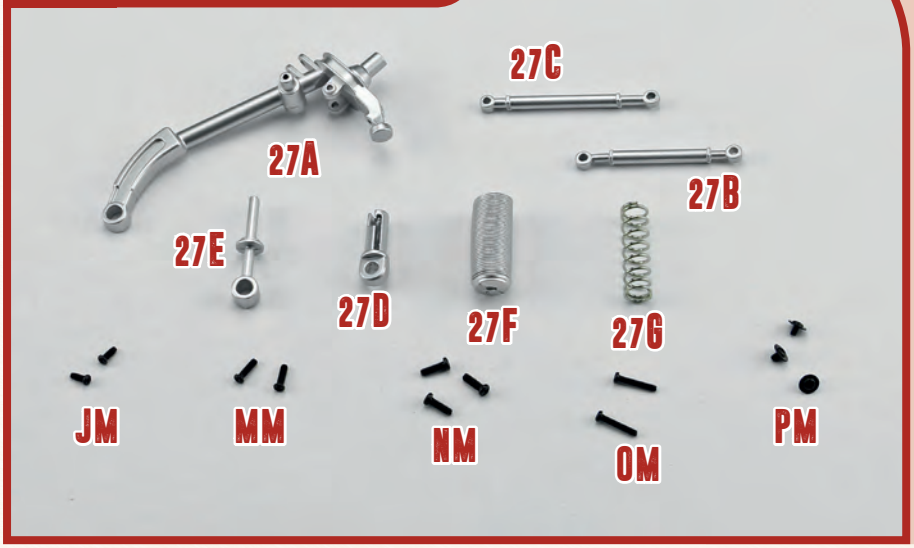

27A	Rear suspension left wishbone
27B	Rear suspension left lower arm
27C	Rear suspension left upper arm
27D	Shock absorber casing
27E	Shock absorber stem
27F	Shock absorber bellow
27G	Spring
JM	2 screws (2x5mm)
MM	2 screws (2x7mm)
NM	3 screws (2.3x7mm)
OM	2 screws (2x11mm)
PM	3 screws (2x3x6mm)

A

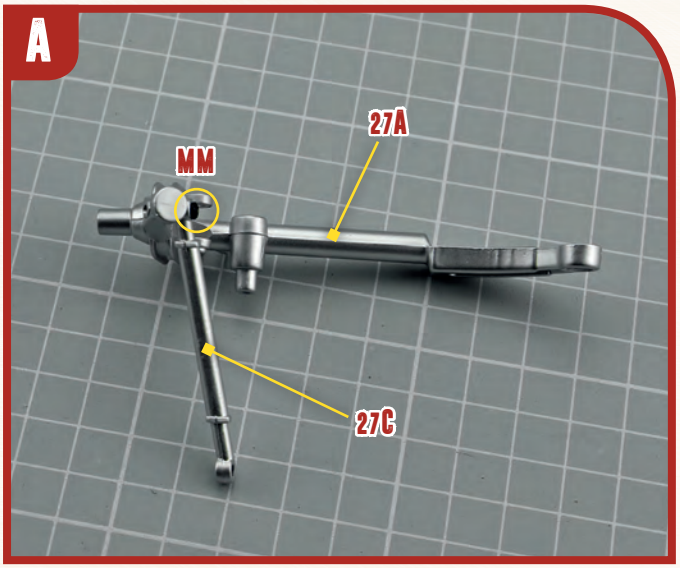

B

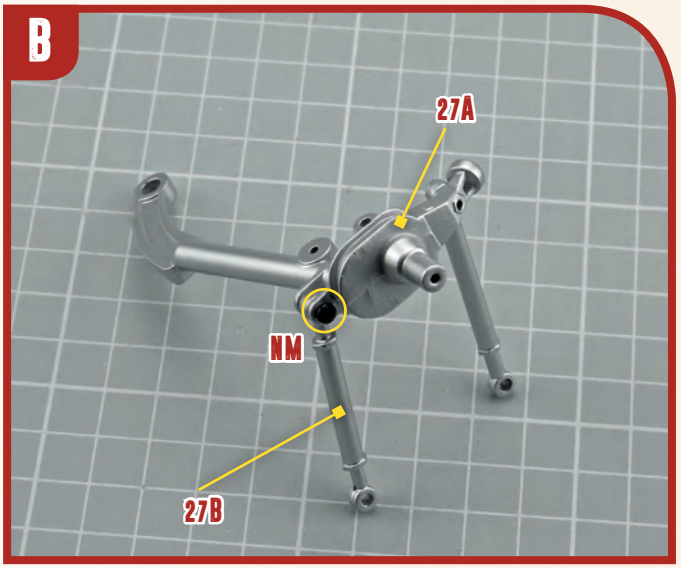

C

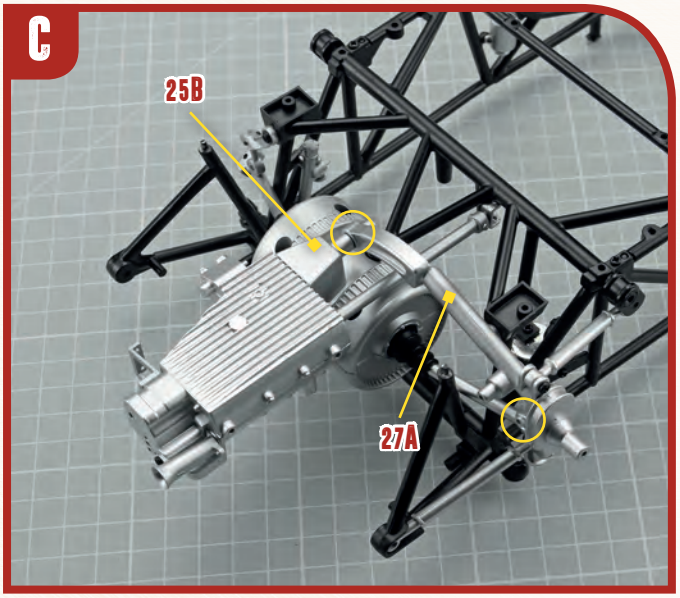

D

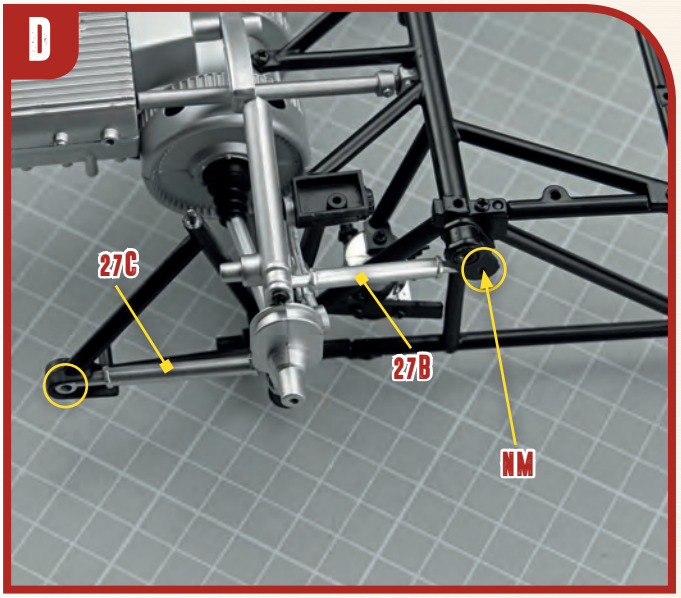

E

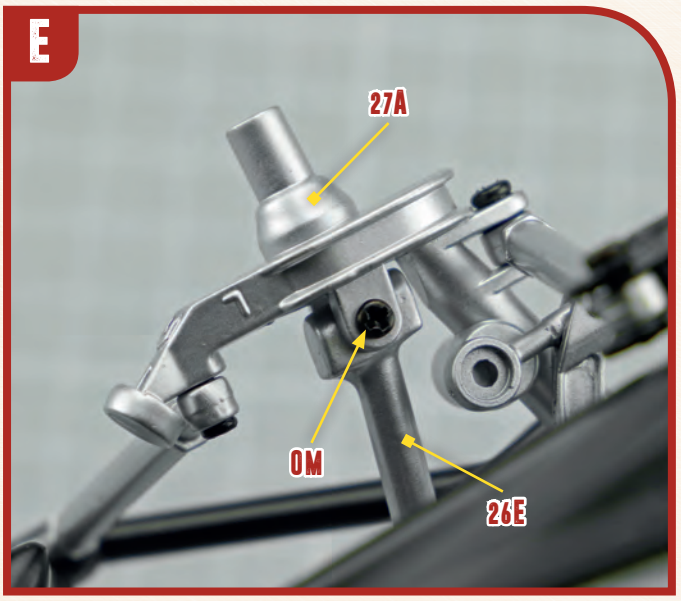

F

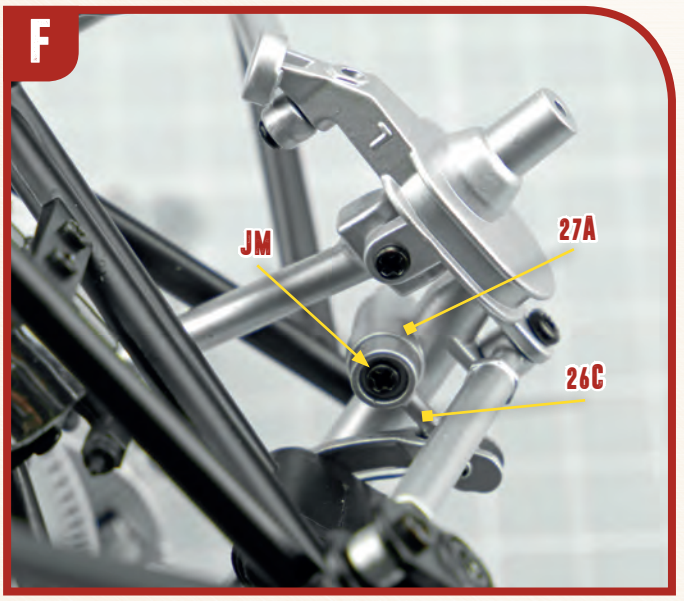

G

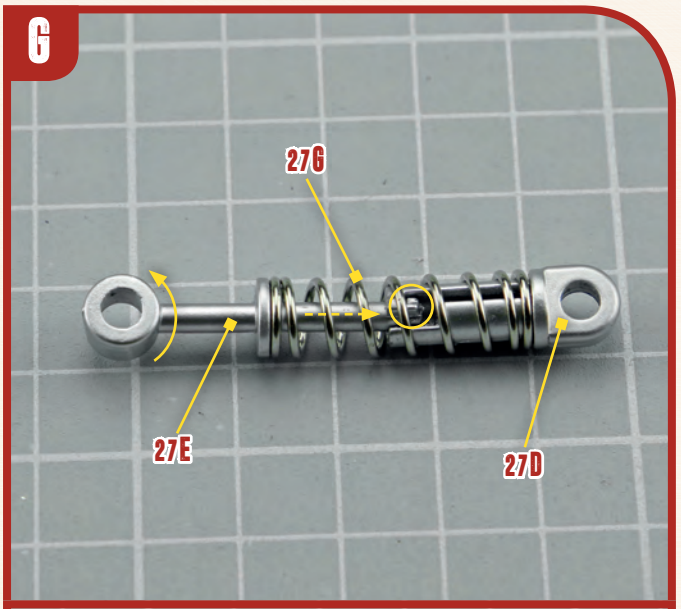

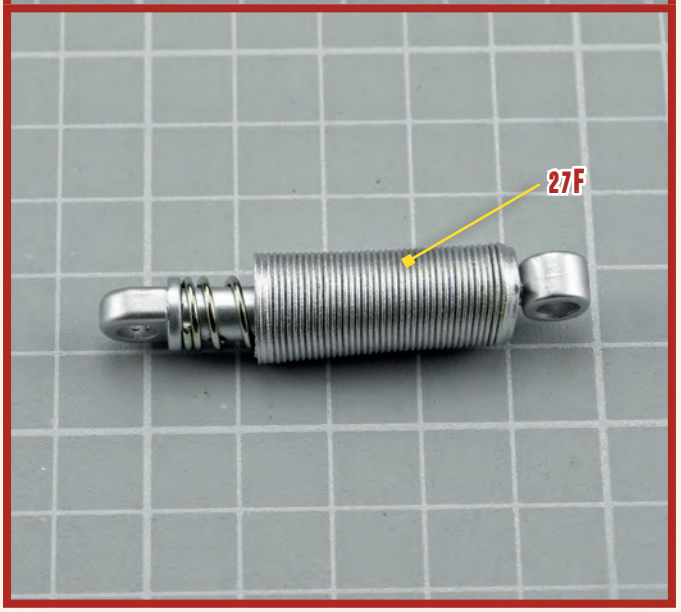

H

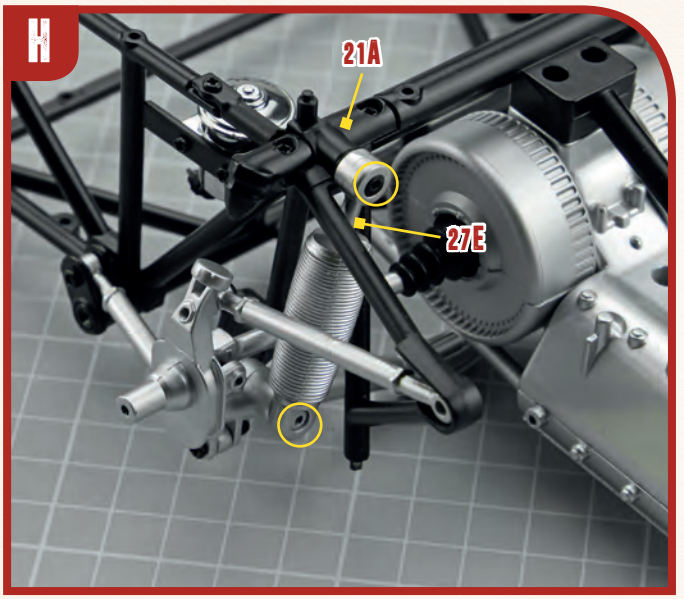

I

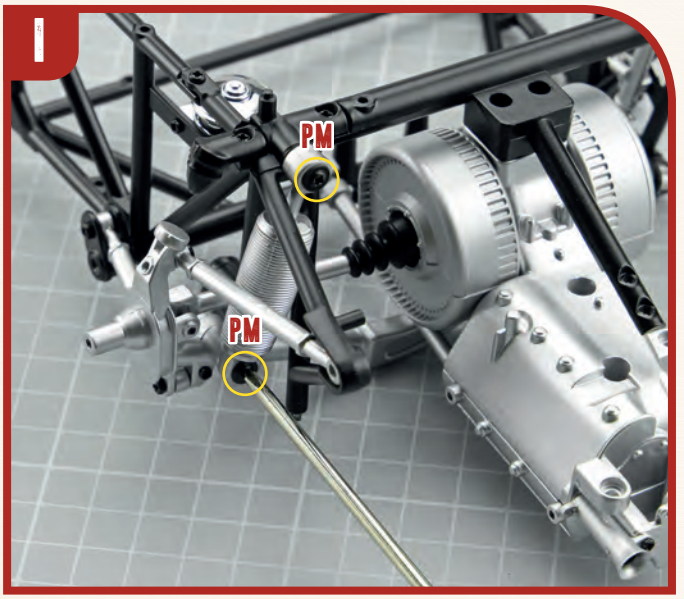

28 PARTS LIST

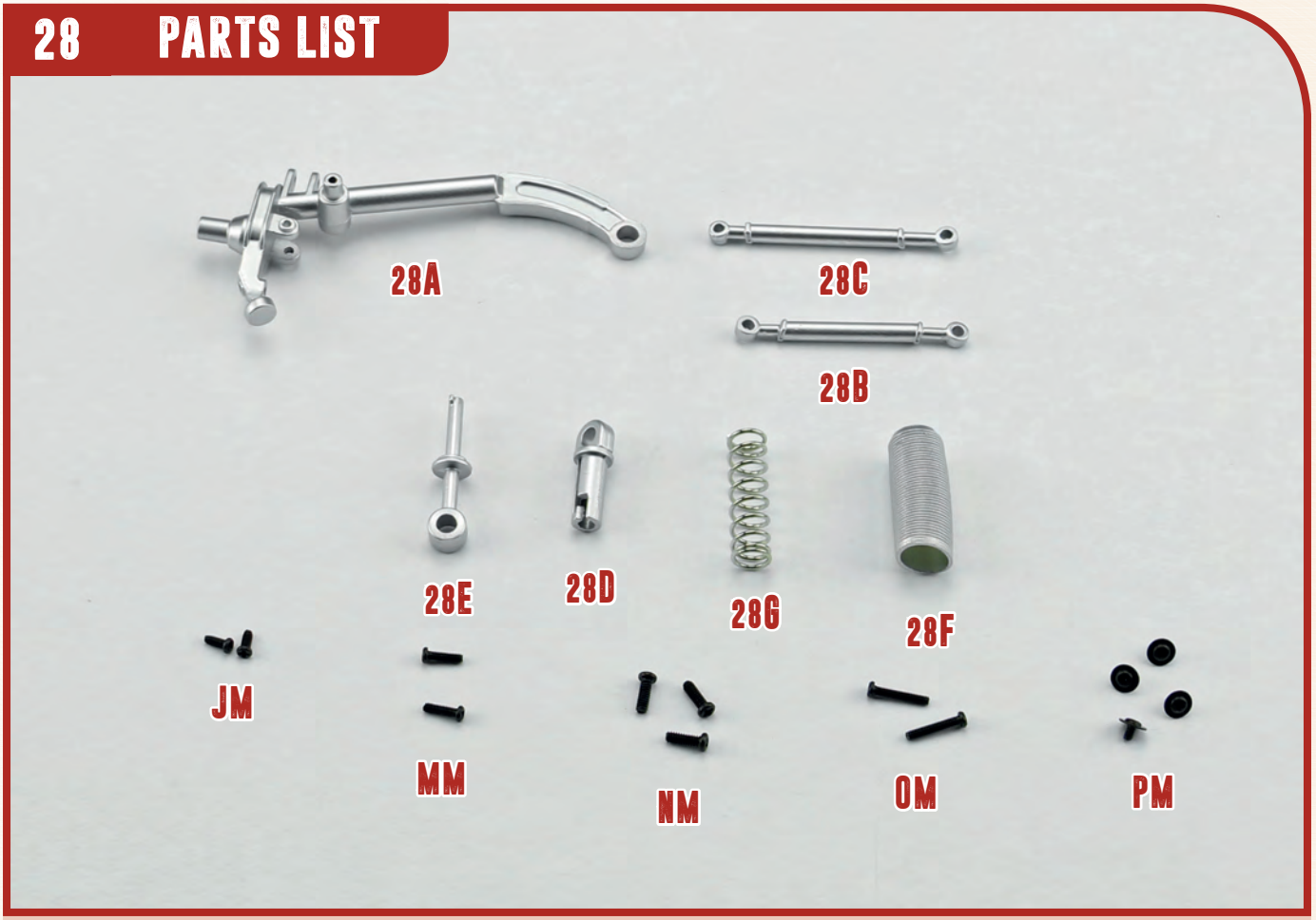

28A Rear suspension right wishbone
28B Right lower arm
28C Right upper arm
28D Shock absorber casing
28E Shock absorber stem
28F Shock absorber bellow
28G Spring

JM 2 screws (2x5mm)
MM 2 screws (2x7mm)
NM 3 screws (2.3x7mm)
OM 2 screws (2x11mm)
PM 4 screws (2x3x6mm)

A

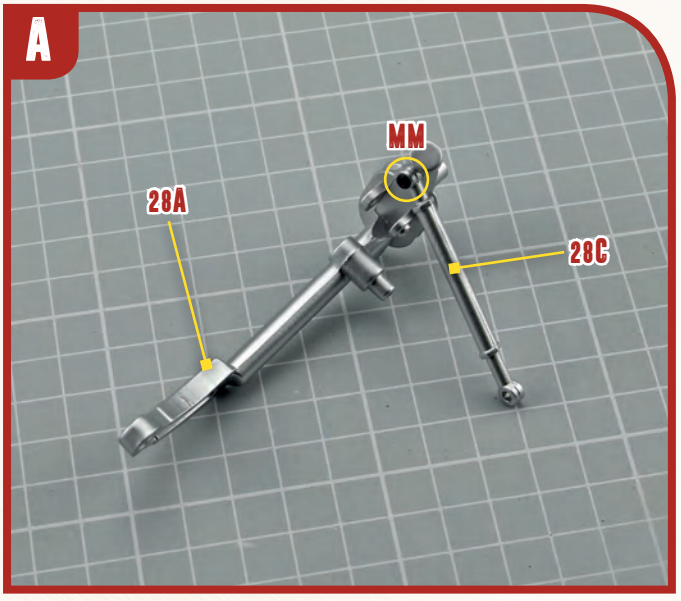

B

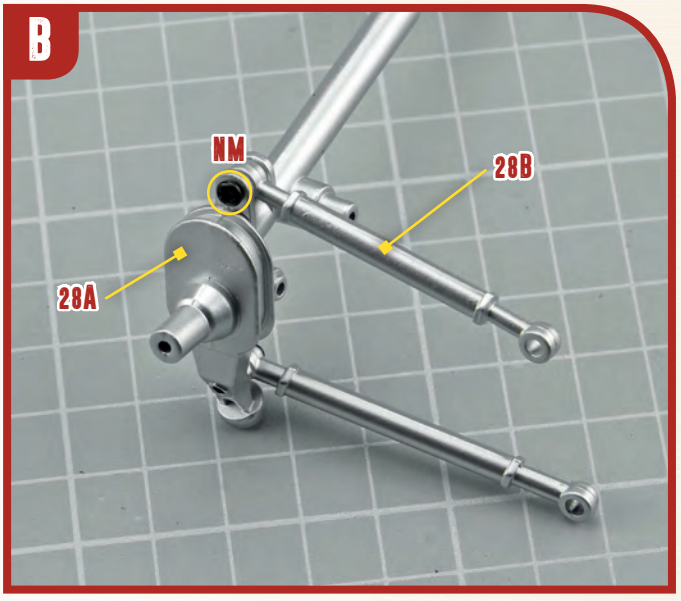

C

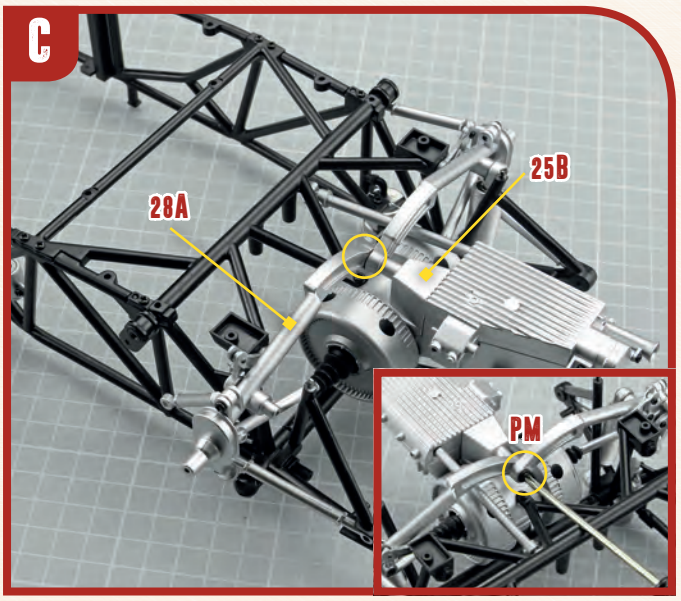

D

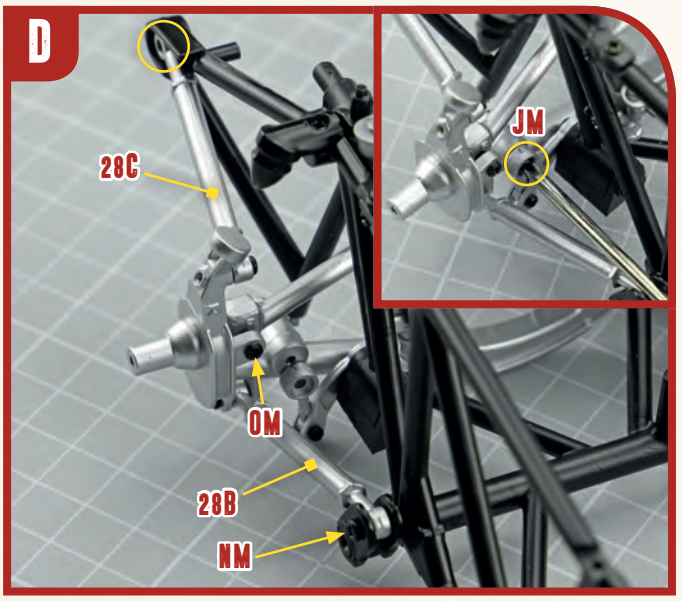

E

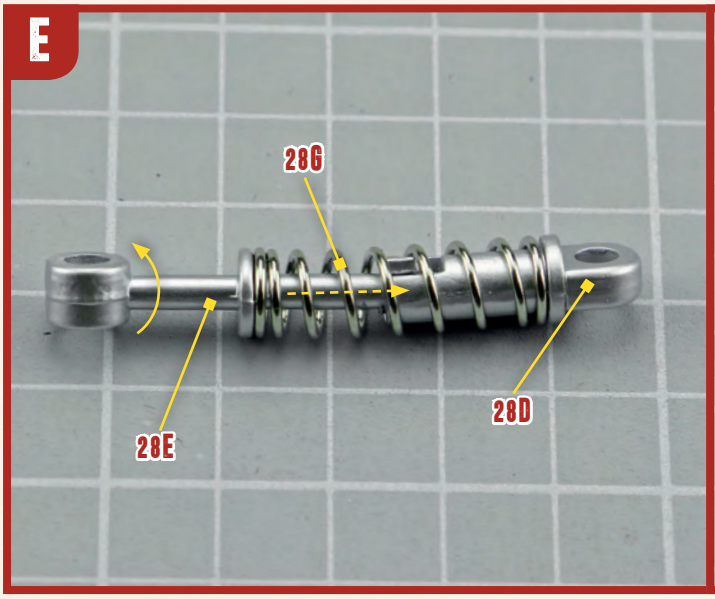

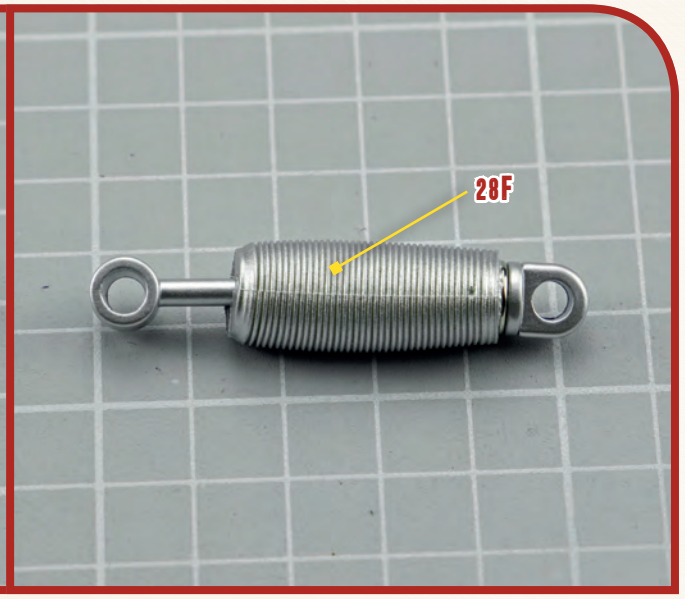

F

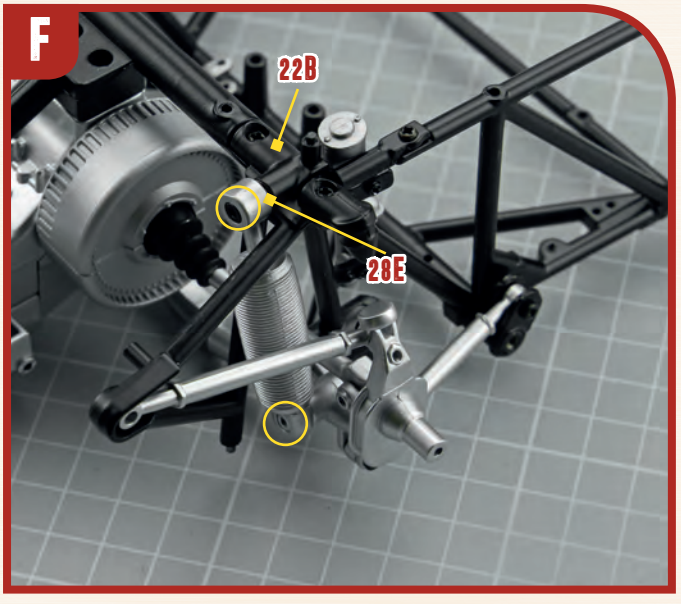

G

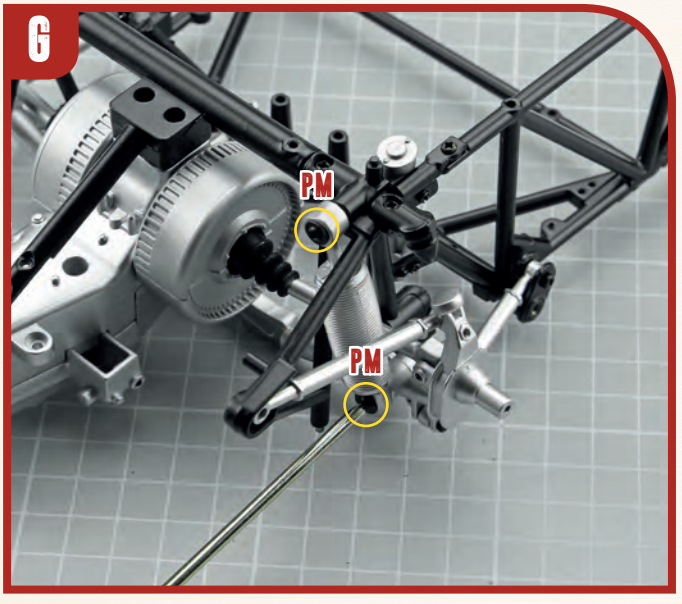

29 PARTS LIST

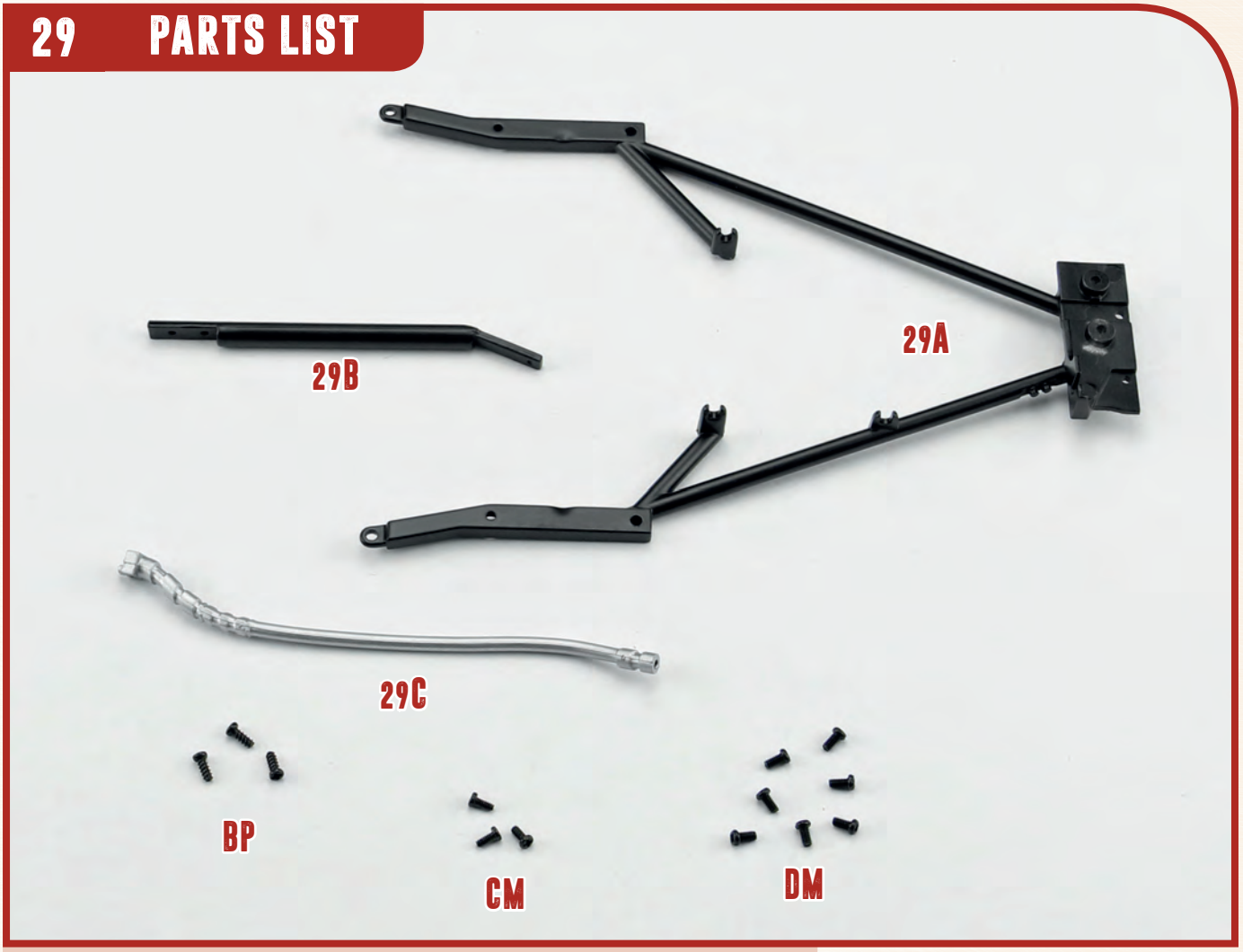

29A Rear subframe
29B Rear subframe tube
29C Gearbox lever

BP 3 screws (2x5mm)
CM 3 screws (1.7x4mm)
DM 7 screws (2x4mm)

A

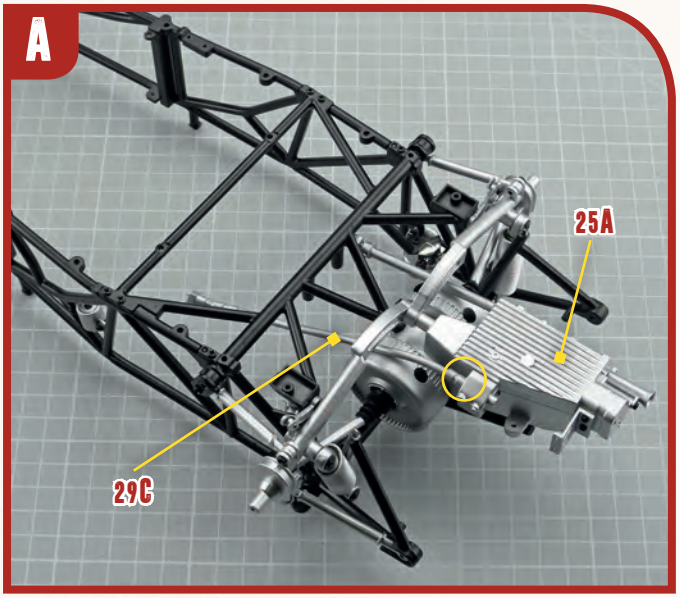

B

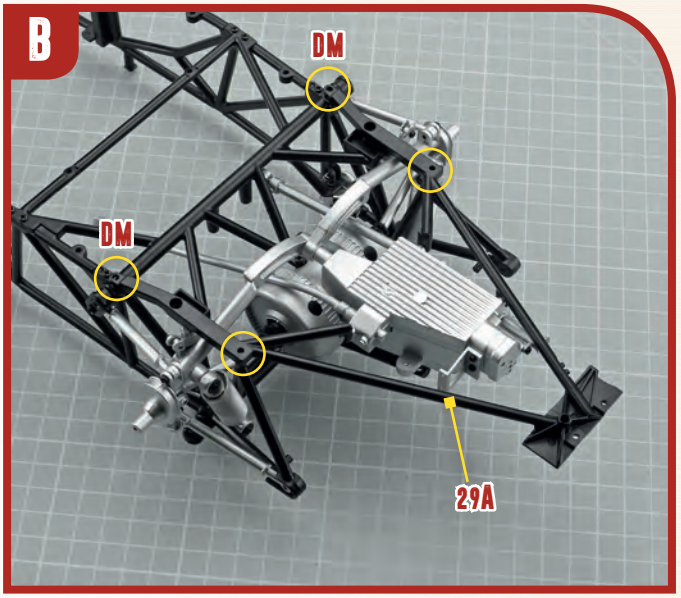

C

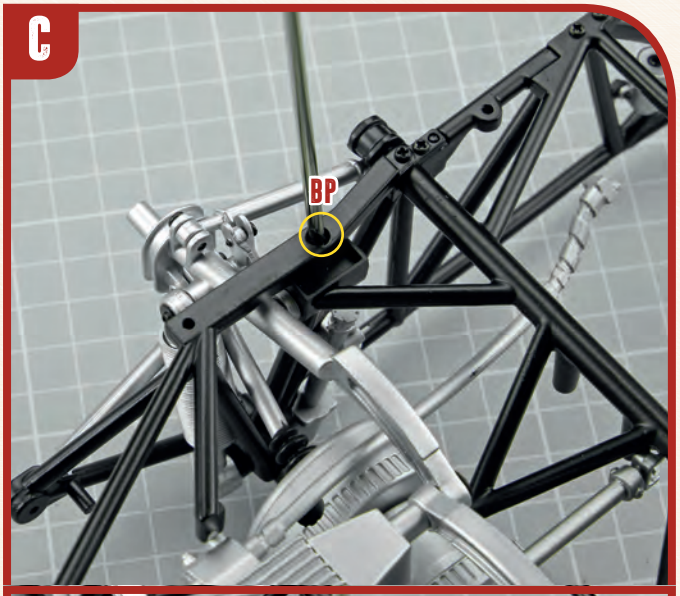

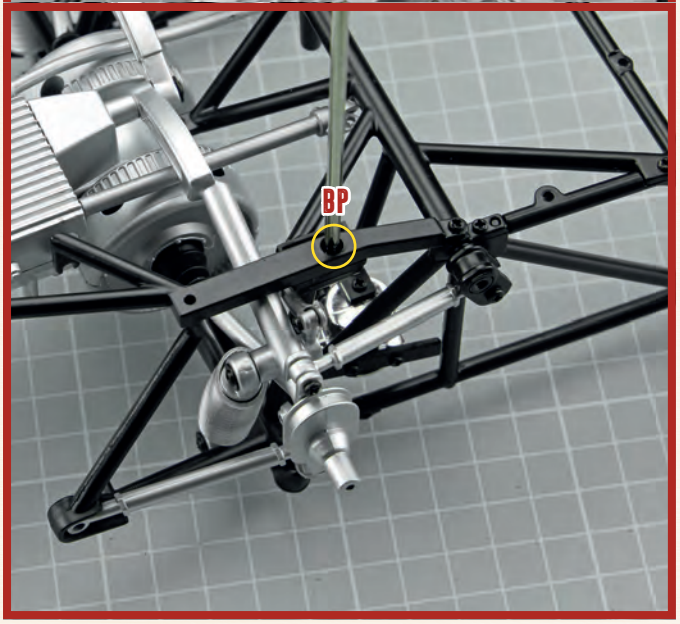

D

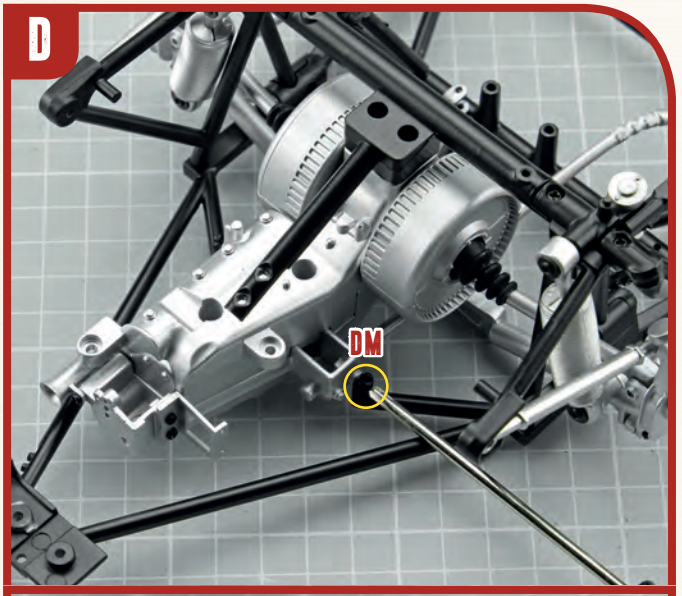

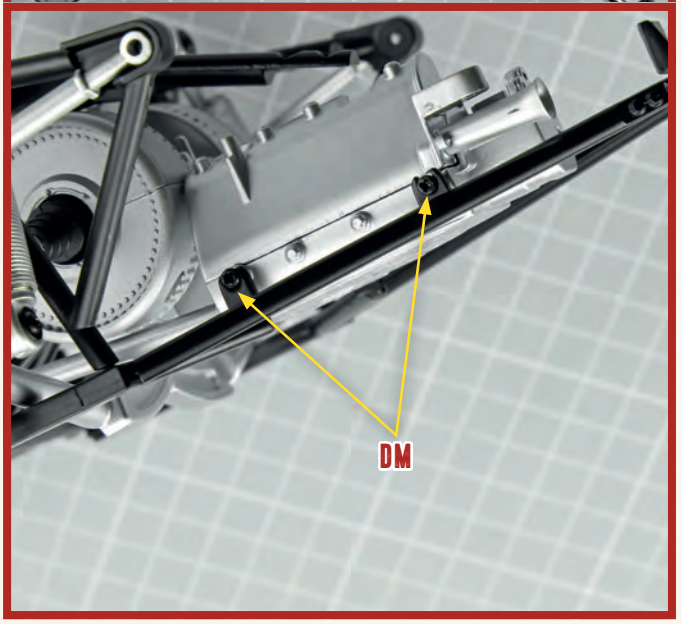

E

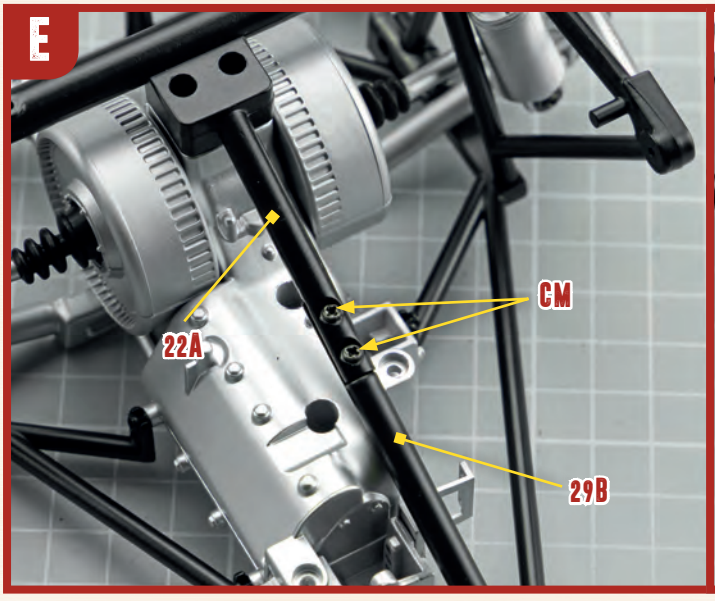

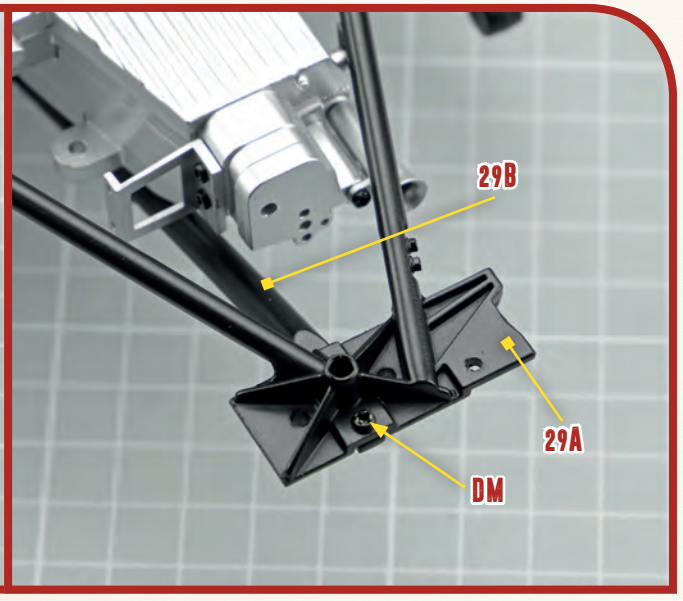

30 PARTS LIST

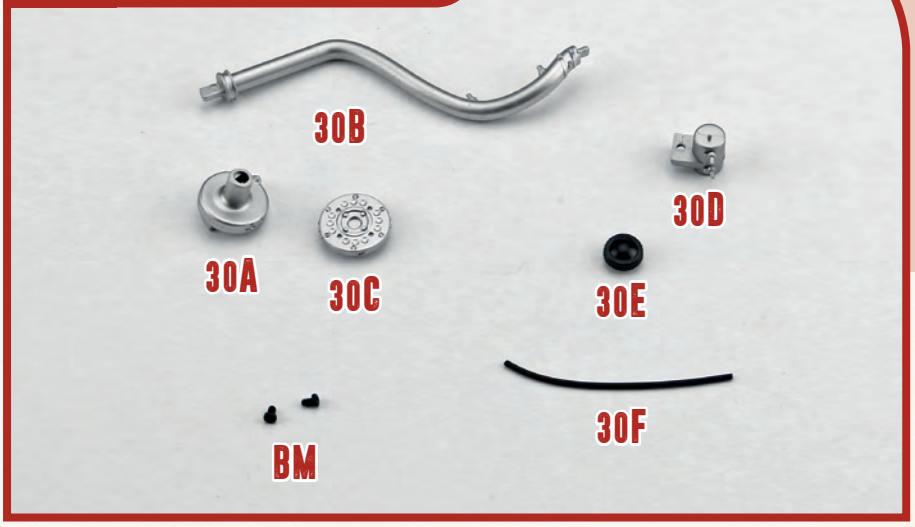

30A	Water pump
30B	Pipe
30C	Crankshaft front coupling
30D	Fuel pump oil reservoir
30E	Reservoir cap
30F	Oil hose
BM	2 screws (1.7x3mm)

A

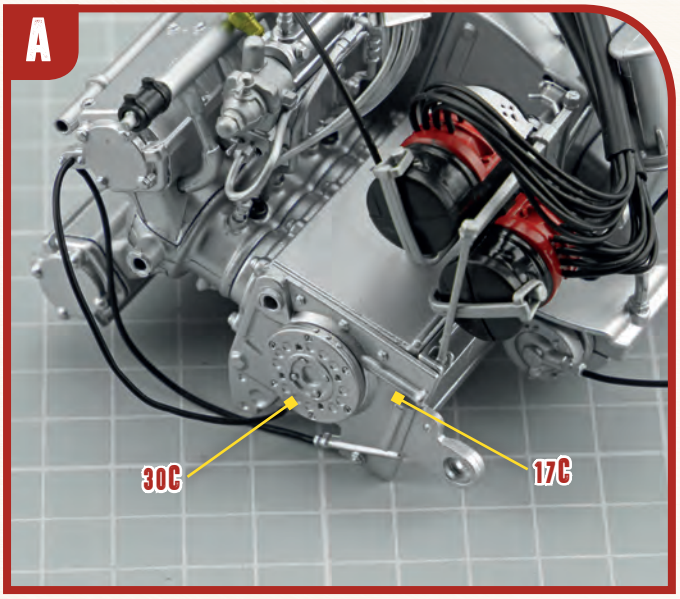

B

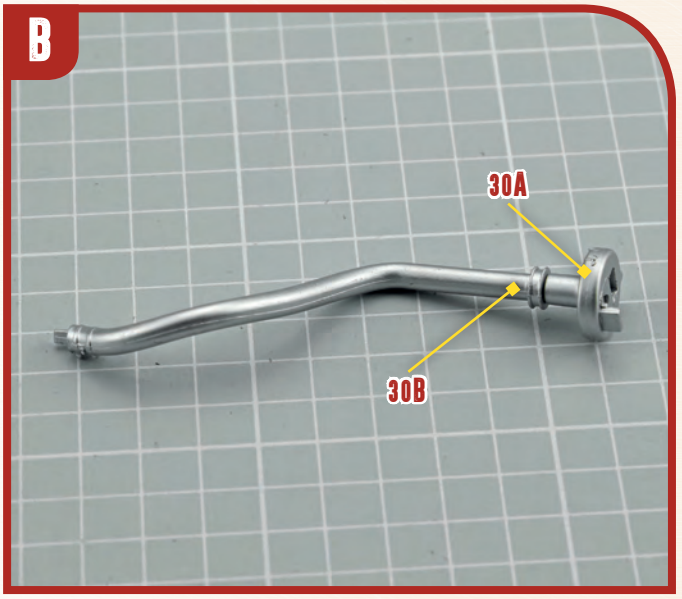

C

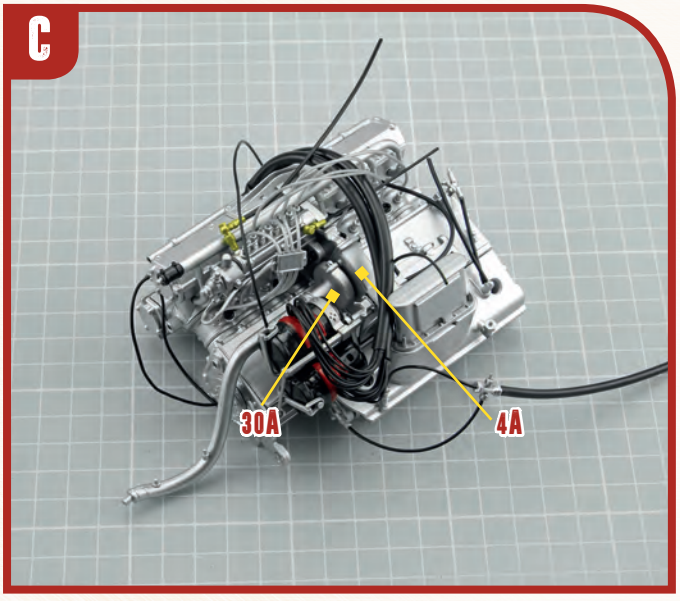

D

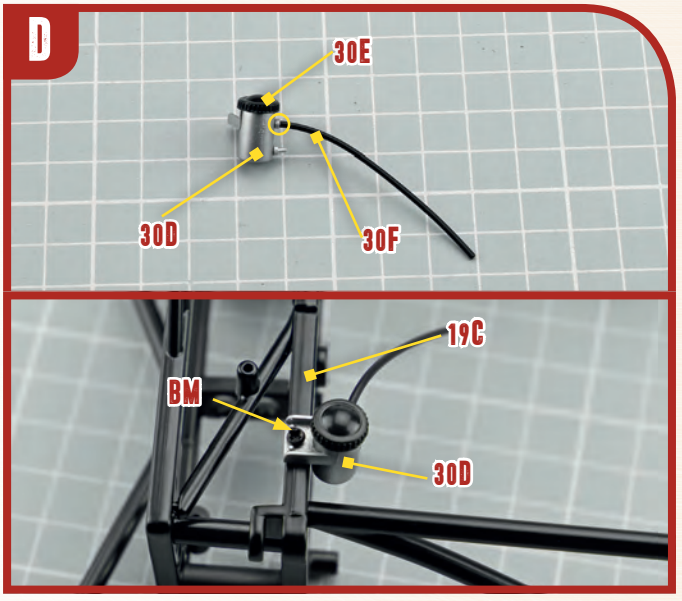

31 PARTS LIST

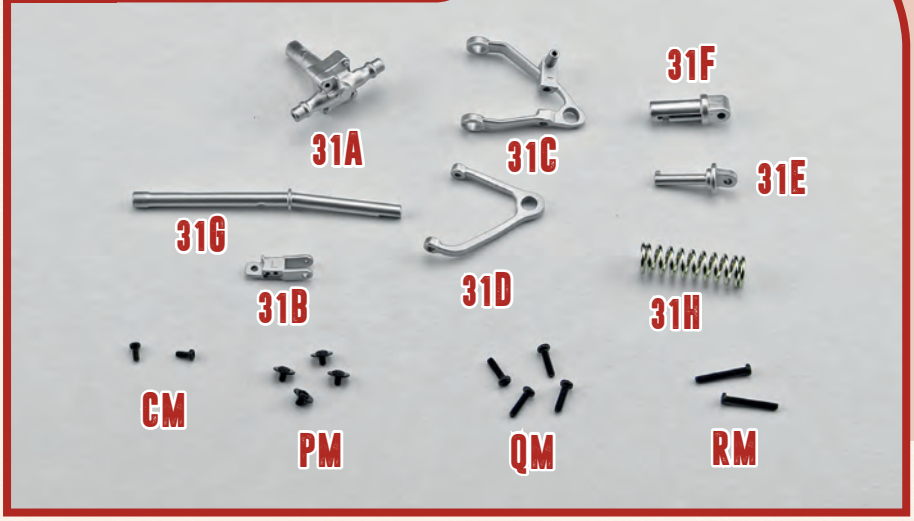

31A	Spindle part A
31B	Spindle part B
31C	Lower suspension arm
31D	Upper suspension arm
31E	Shock absorber stem
31F	Shock absorber casing
31G	Torsion bar
31H	Spring
CM	2 screws (1.7x4mm)
PM	4 screws (2x3x6mm)
QM	4 screws (2x8mm)
RM	2 screws (2x14mm)

A

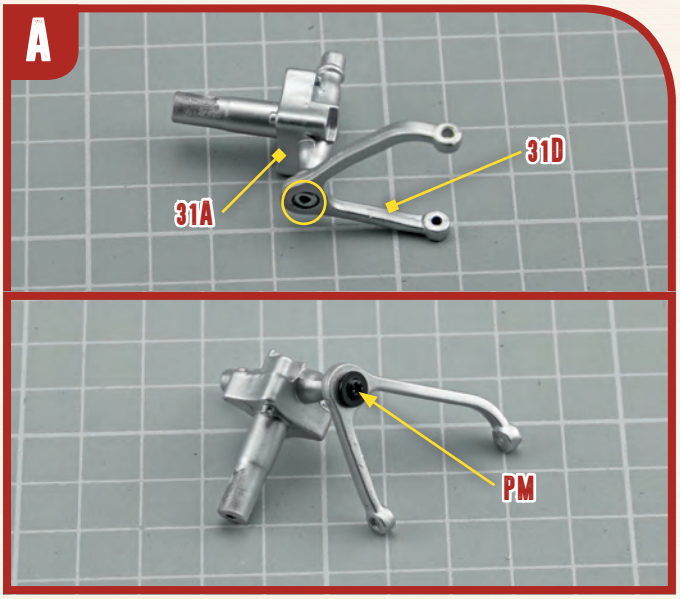

B

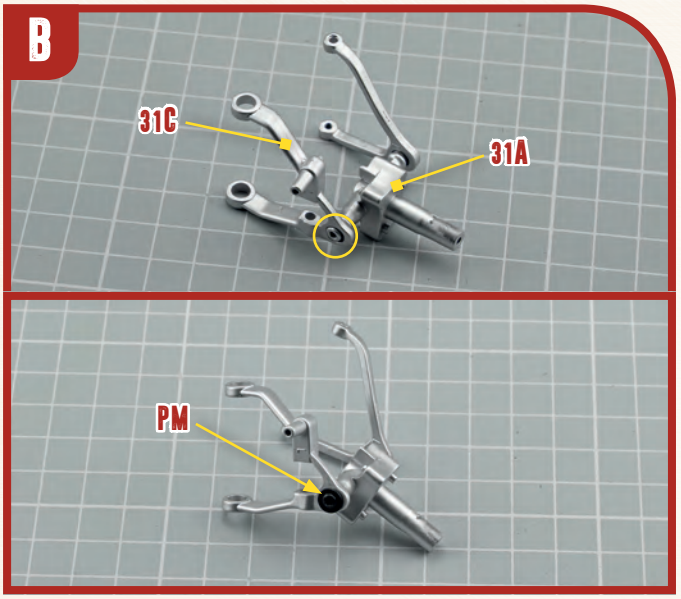

C

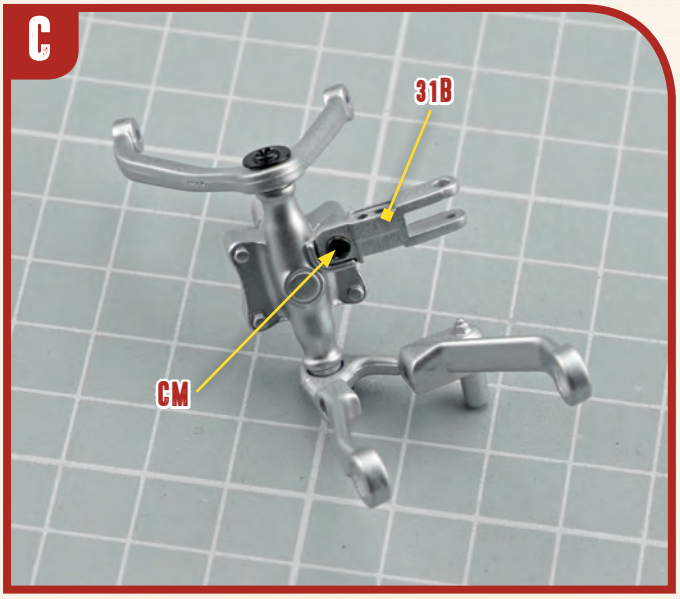

D

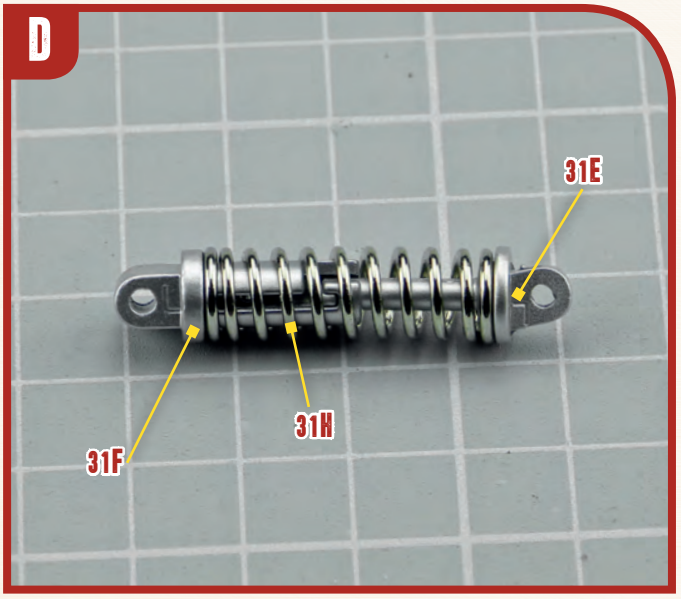

E

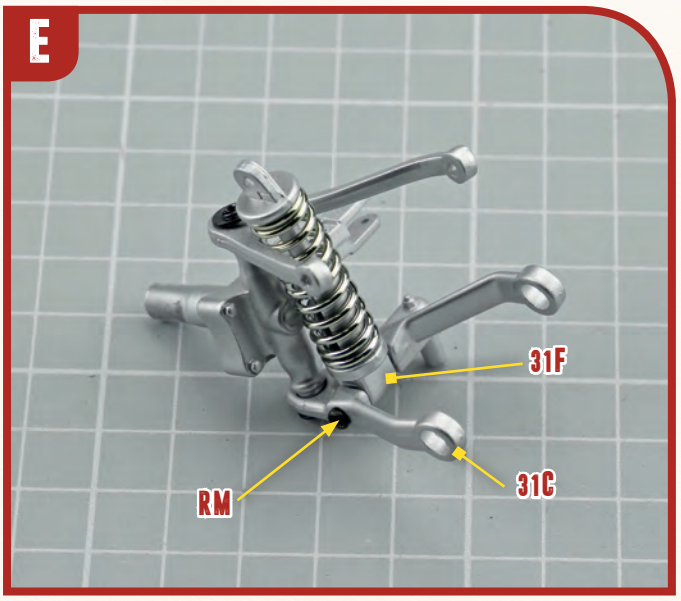
31F
RM
31C

F

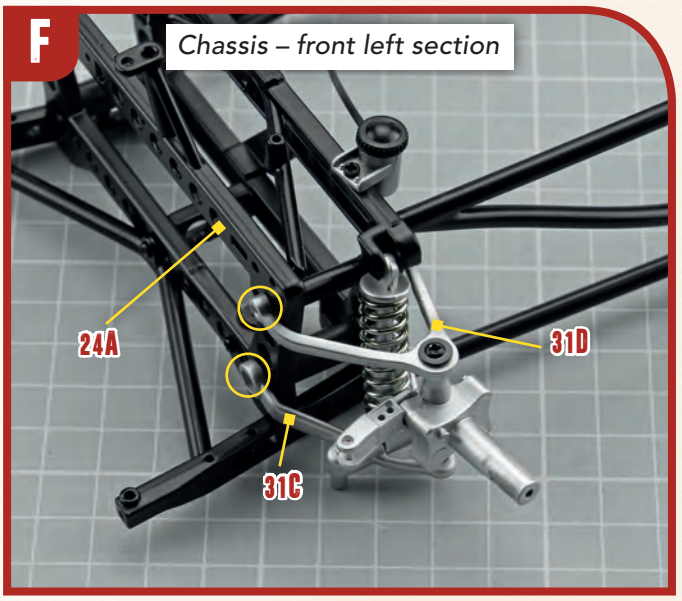
Chassis – front left section
24A
31D
31C

G

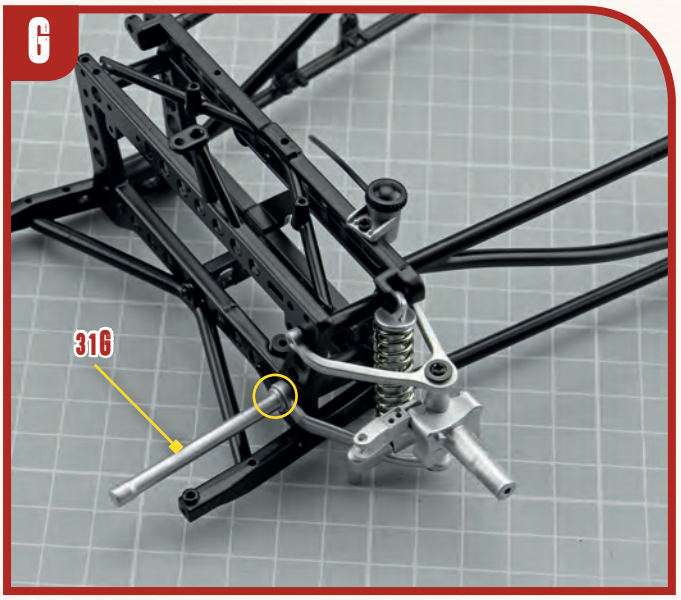
31G

H

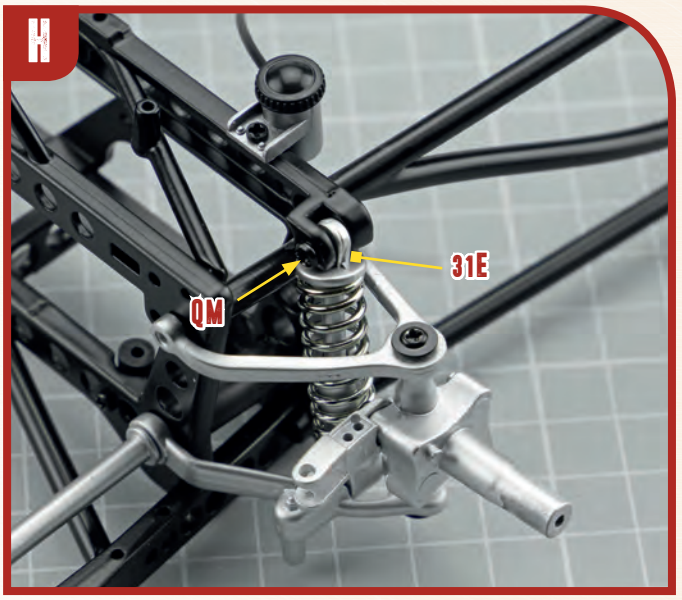
31E
QM

I

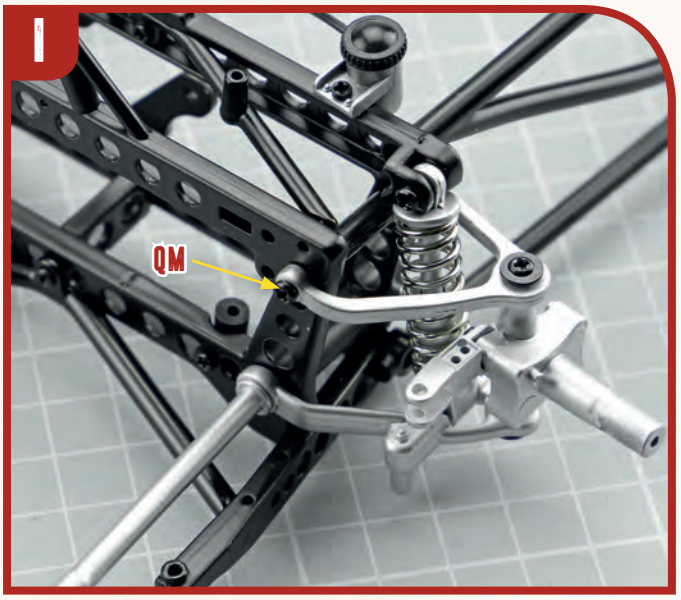
QM

J

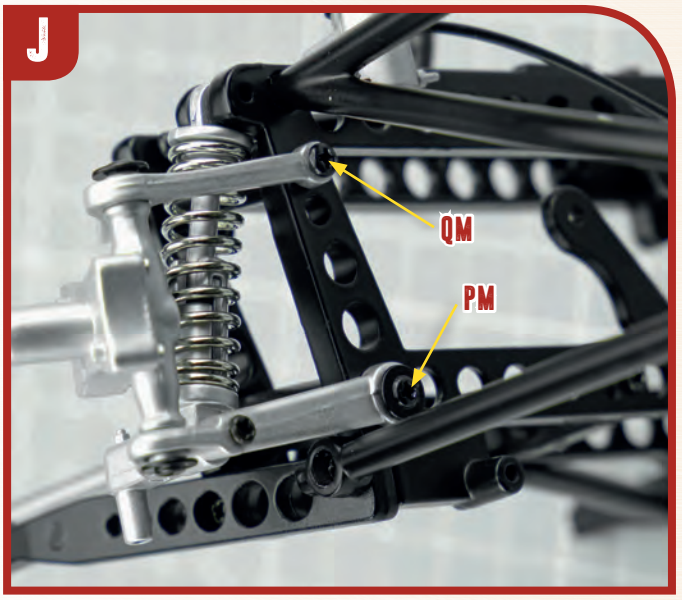
QM
PM

32 PARTS LIST



32A	Spindle part A
32B	Spindle part B
32C	Lower suspension arm
32D	Upper suspension arm
32E	Shock absorber stem
32F	Shock absorber casing
32G	Torsion bar
32H	Spring
CM	2 screws (1.7x4mm)
PM	4 screws (2x3x6mm)
QM	4 screws (2x8mm)
RM	2 screws (2x14mm)

A

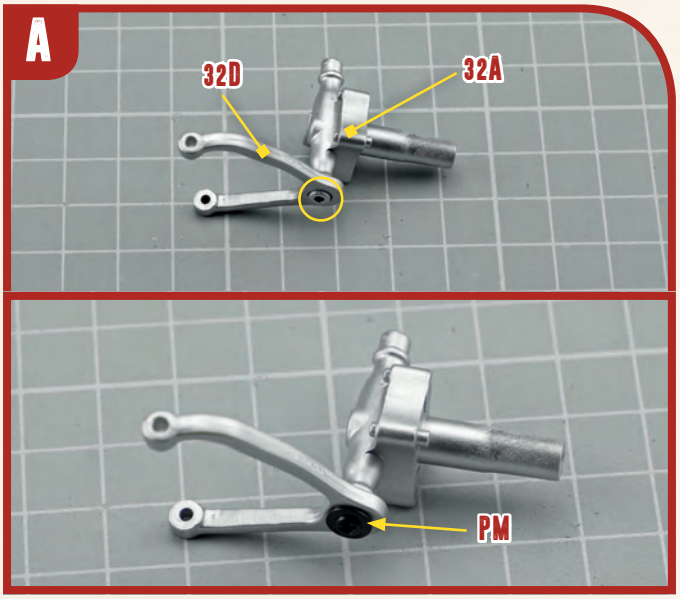

B

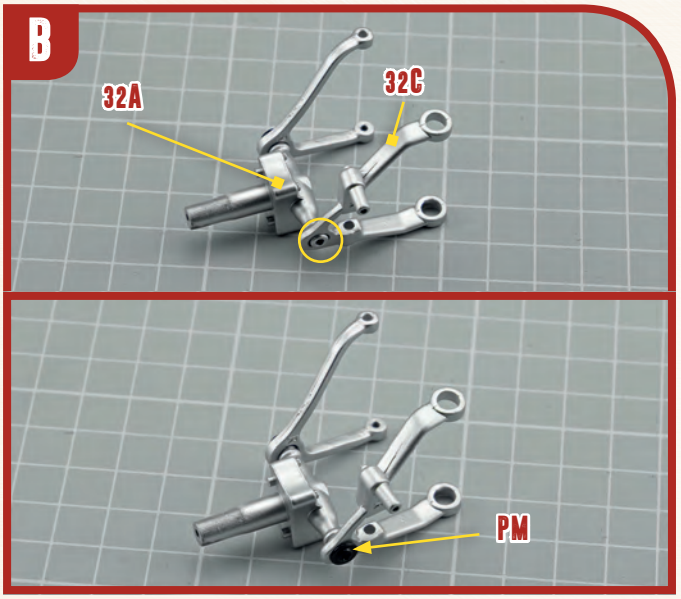

C

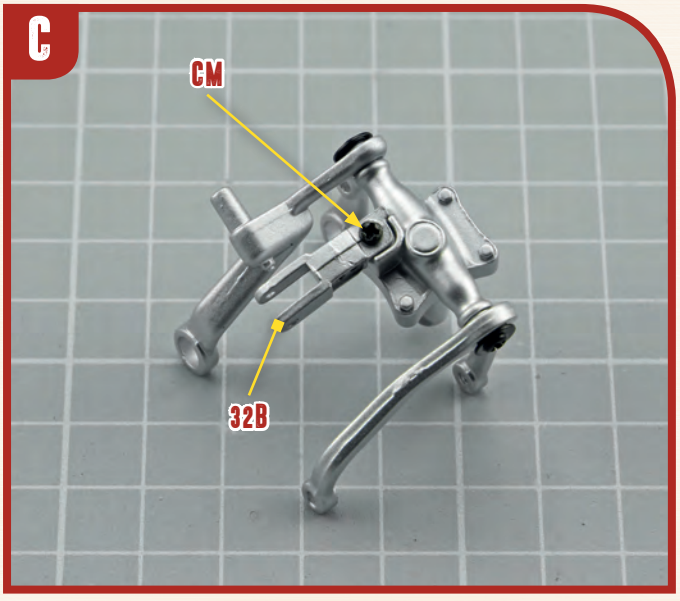

D

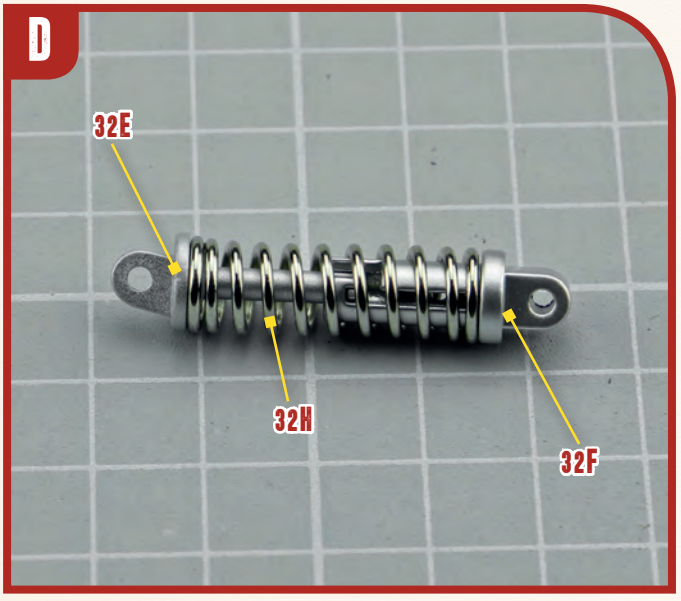

E

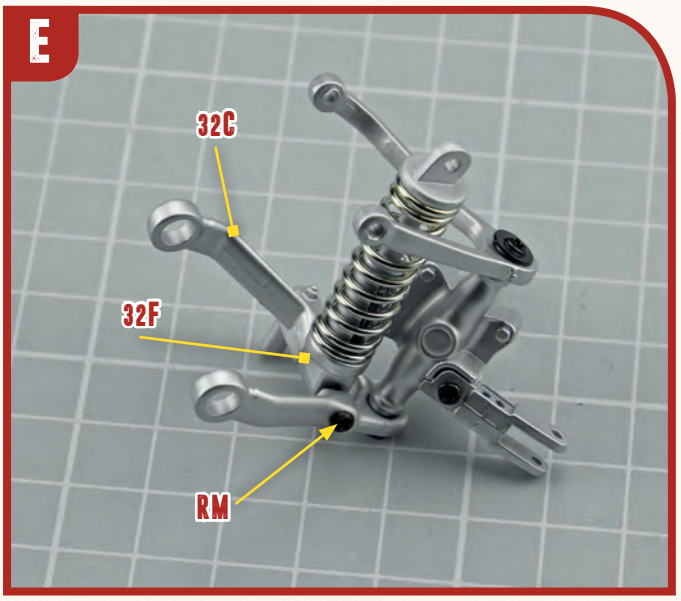

F

Chassis – front right section

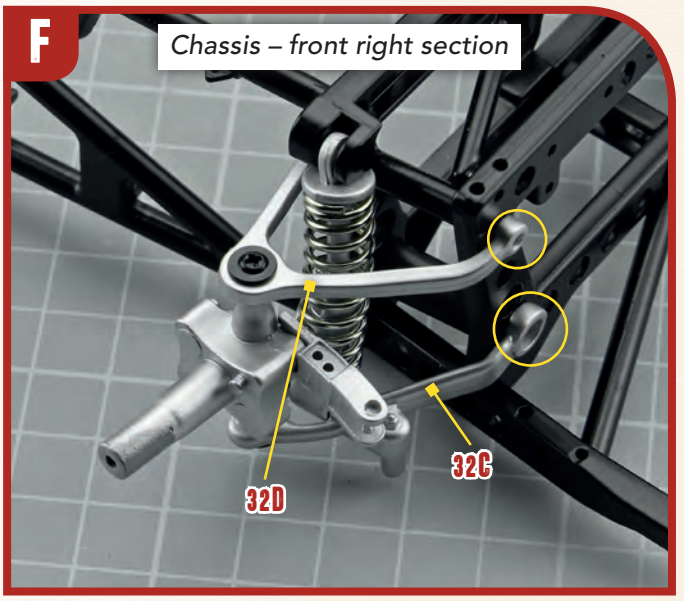

G

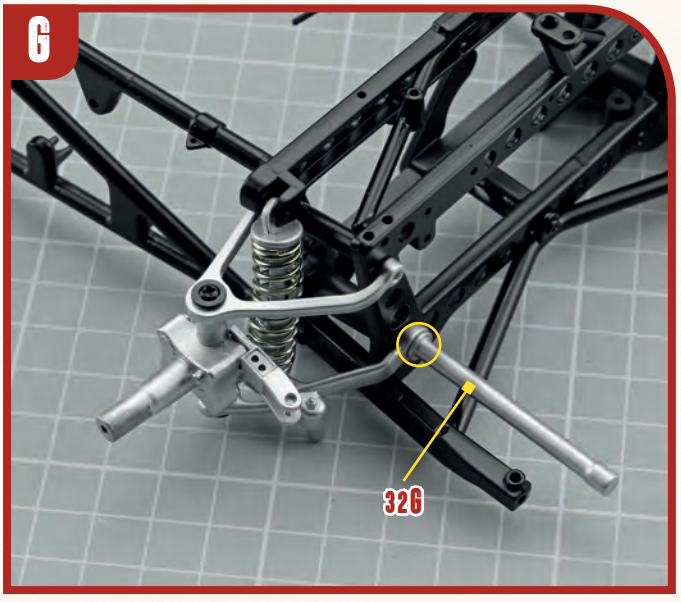

H

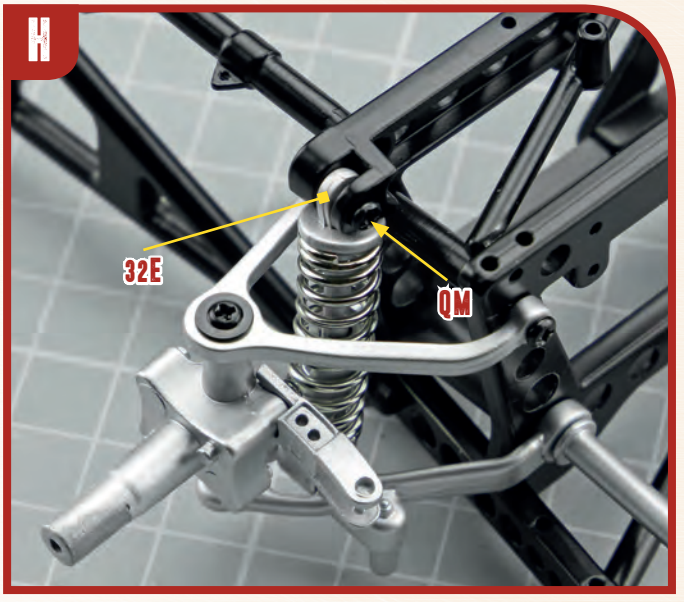

I



J

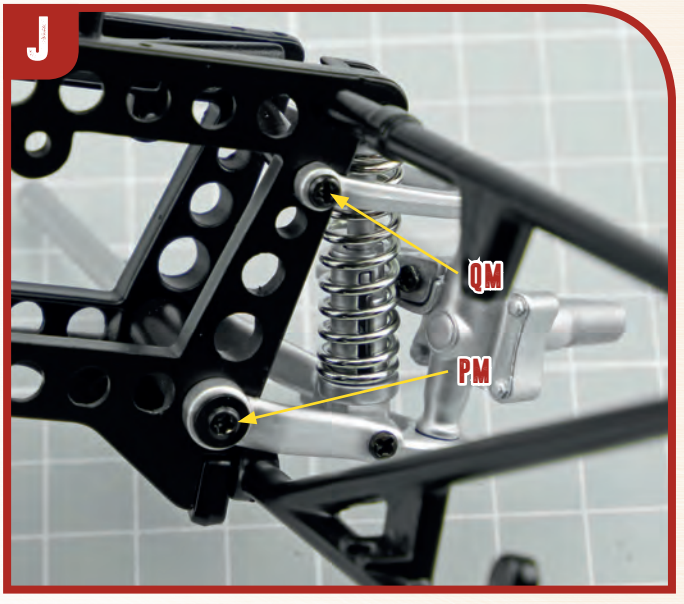

33 PARTS LIST

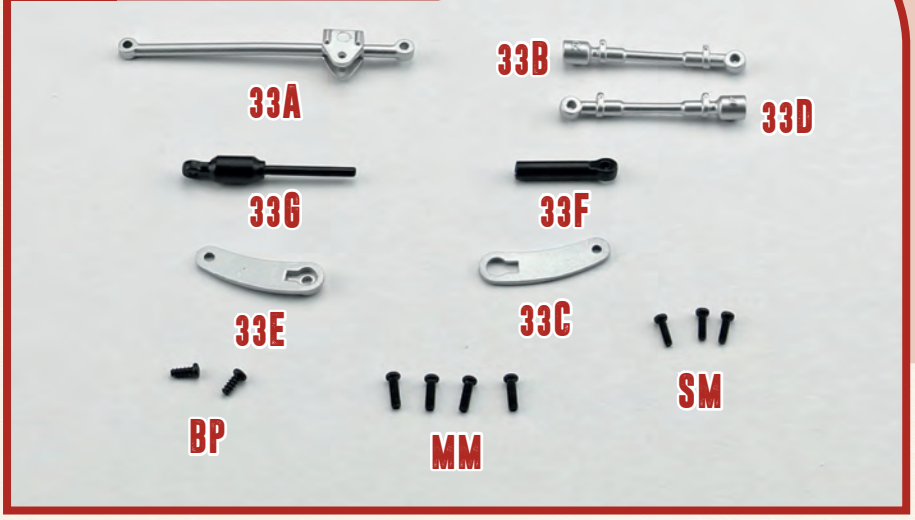

33A	Central steering bar
33B	Left tie rod
33C	Right plate
33D	Right tie rod
33E	Left plate
33F	Arm 1
33G	Arm 2
BP	2 screws (2x5mm)
MM	4 screws (2x7mm)
SM	3 screws (1.7x6mm)

A

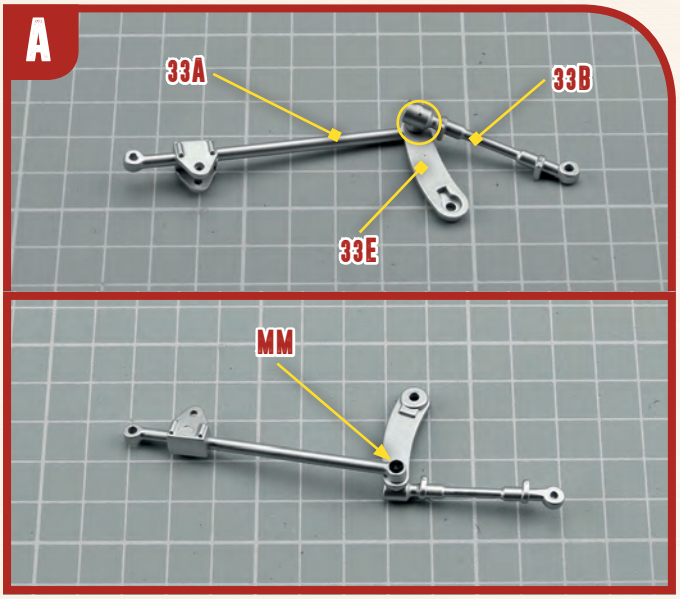

B

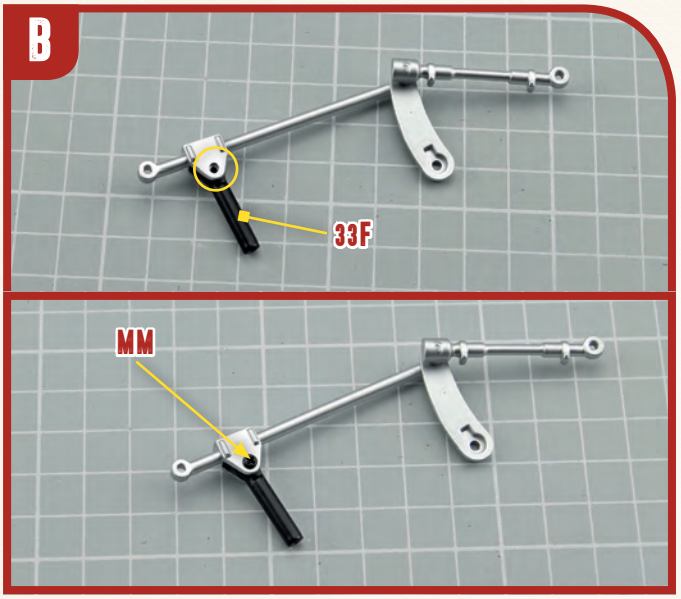

C

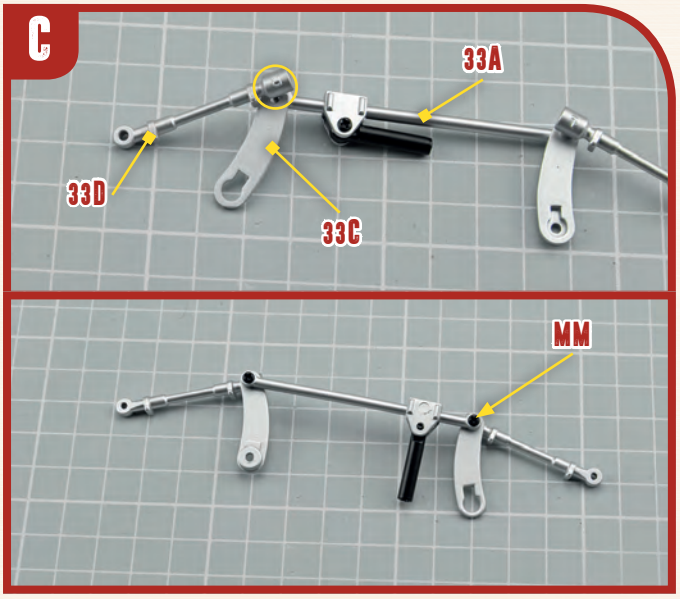

D

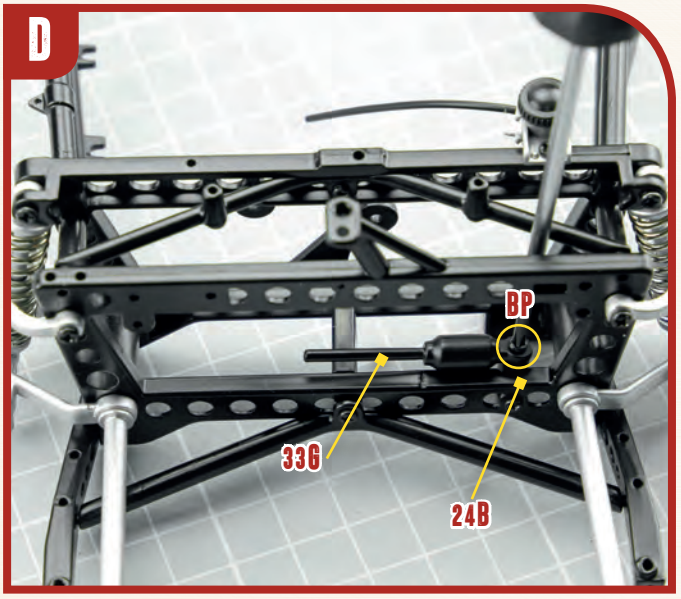

E

Slide central steering bar into the front section of chassis

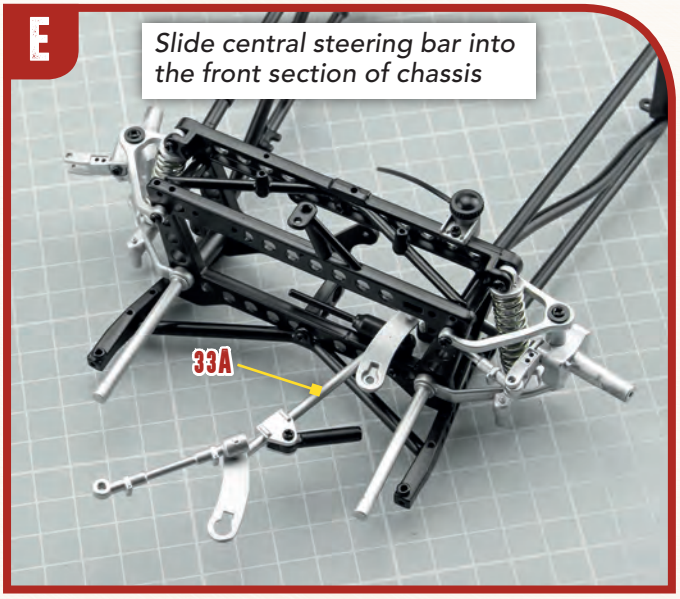

F

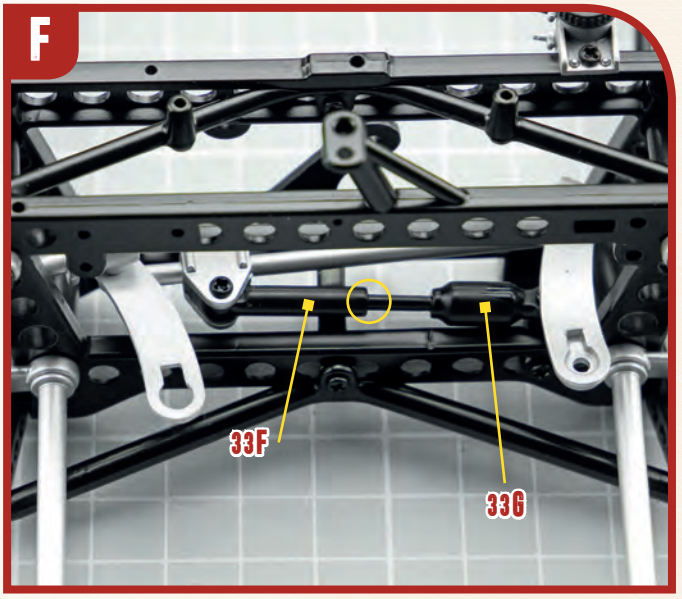

G

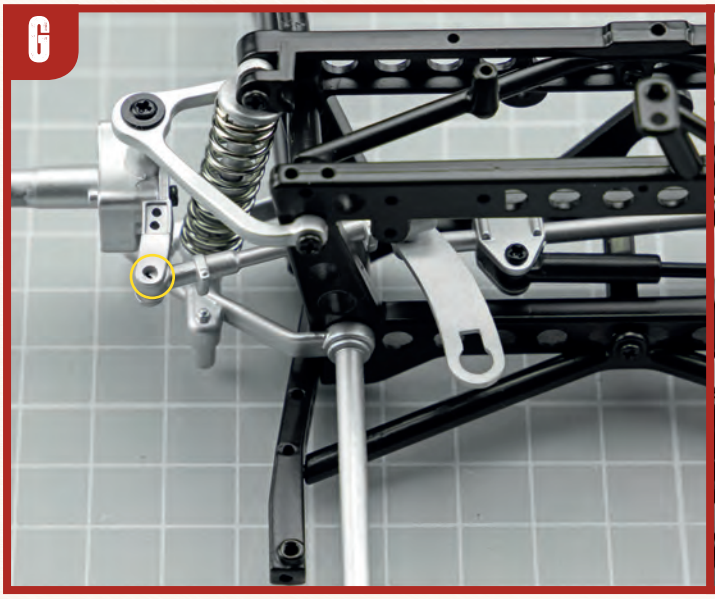

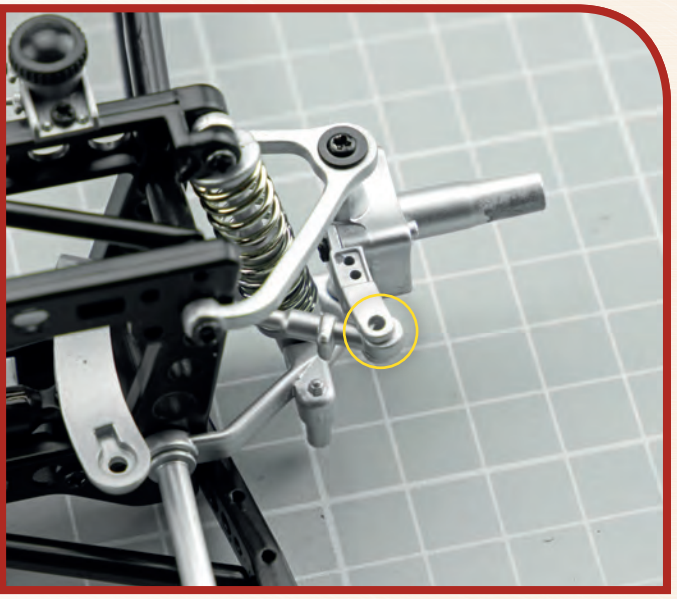

H

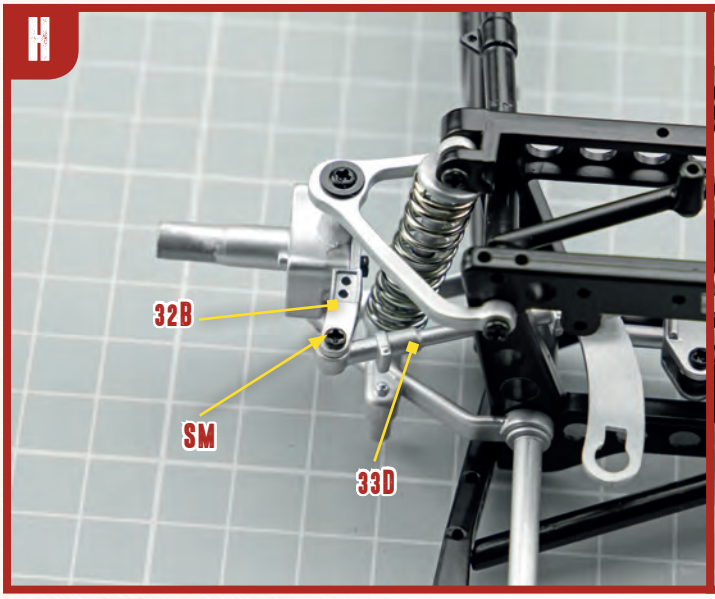

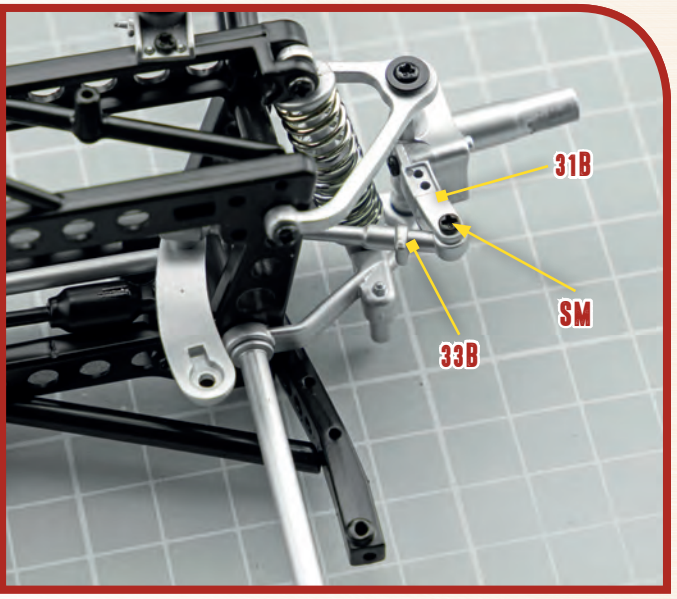

34 PARTS LIST

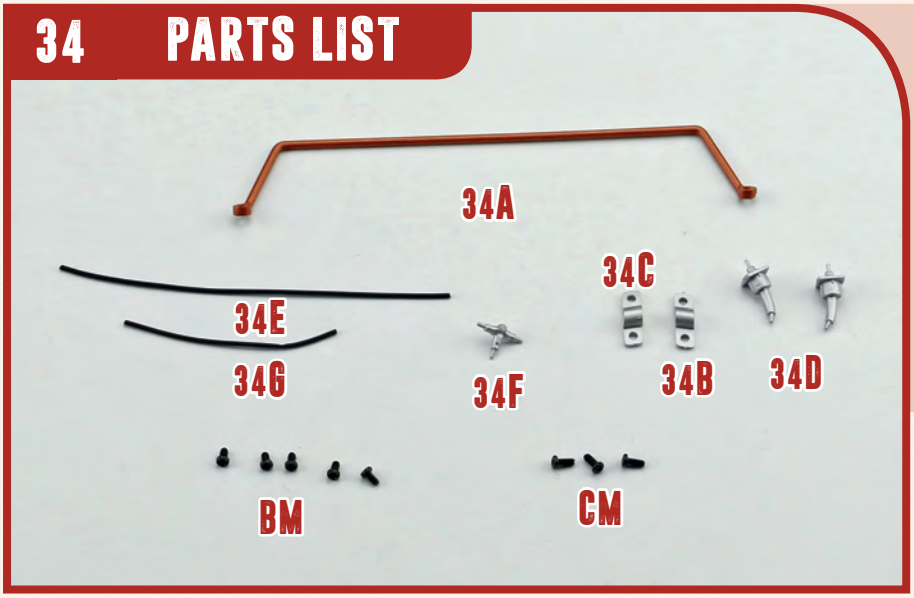

34A	Front axle stabilizer bar
34B	Left bracket
34C	Right bracket
34D	Brake cables links (x2)
34E	Left brake cable
34F	Brake distributor
34G	Right brake cable
BM	5 screws (1.7x3mm)
CM	3 screws (1.7x4mm)

A

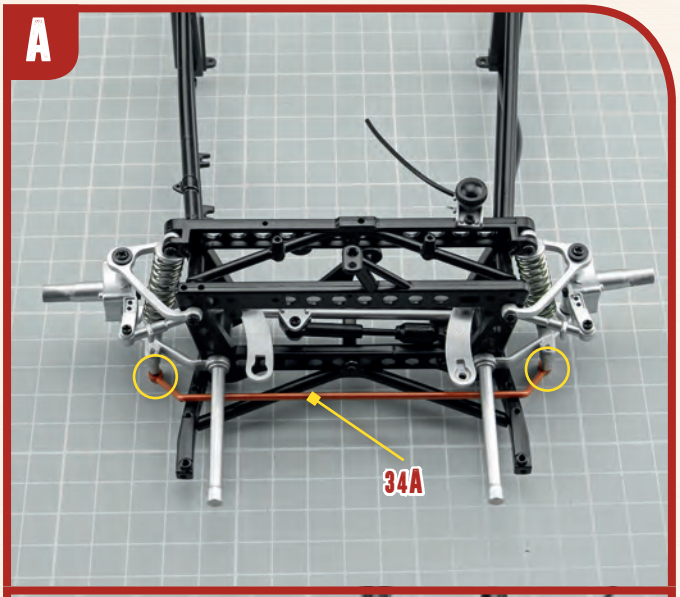

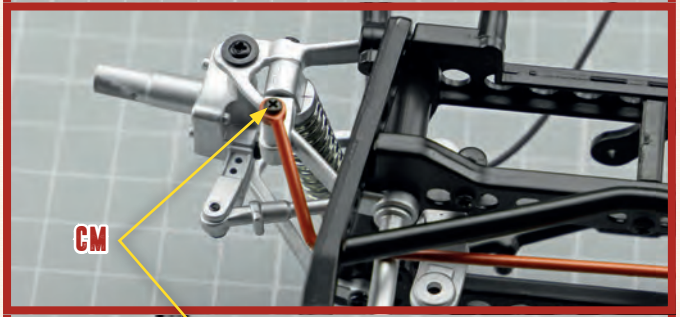

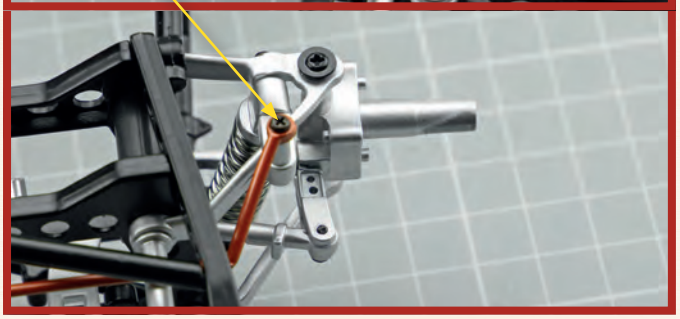

B

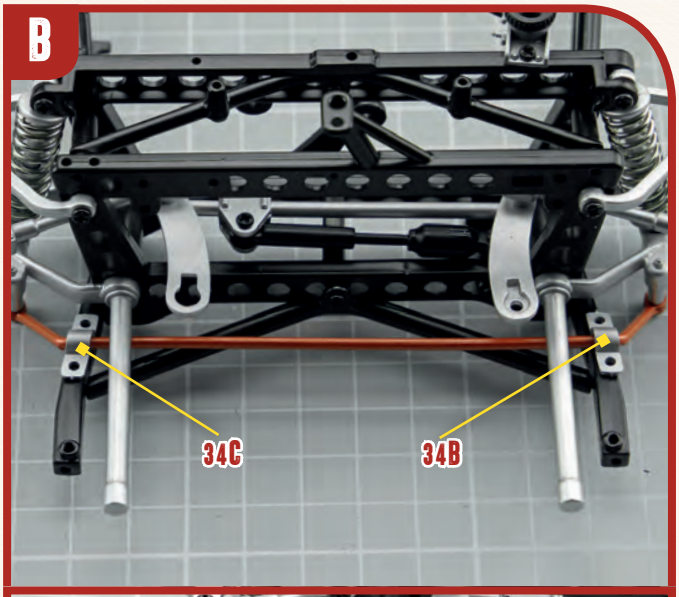

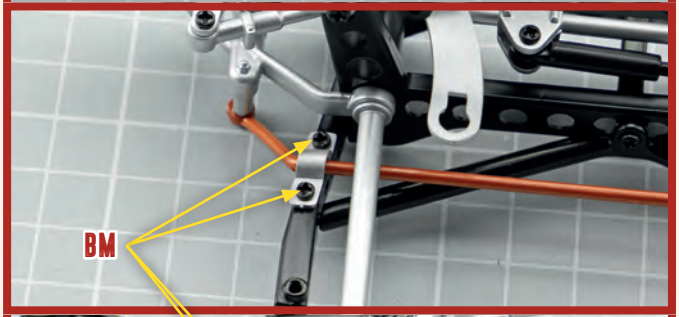

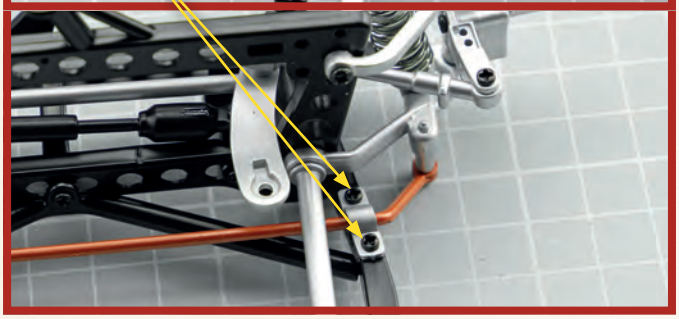

C

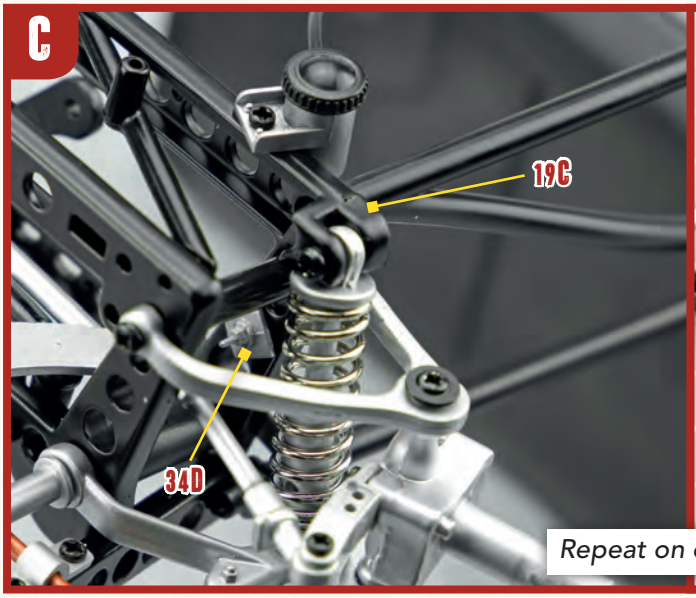

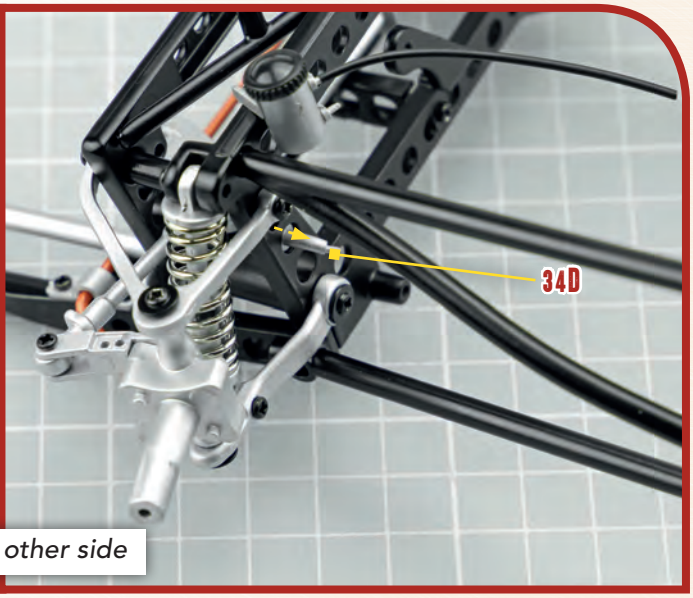

Repeat on other side

D

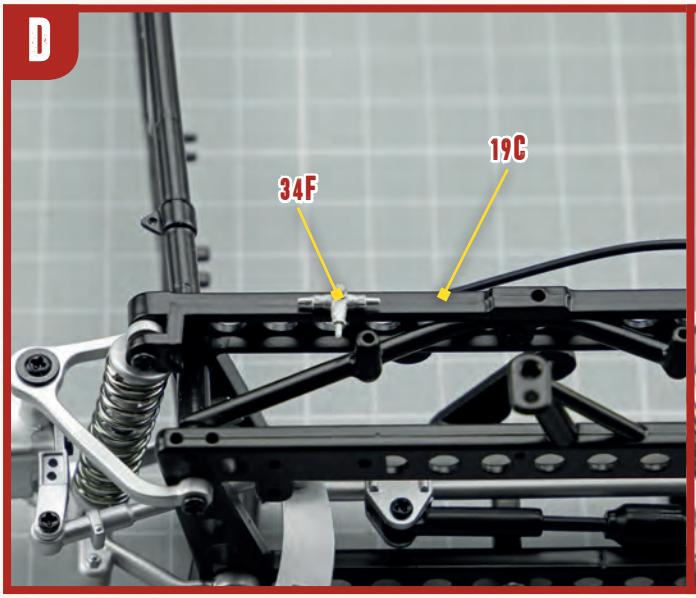

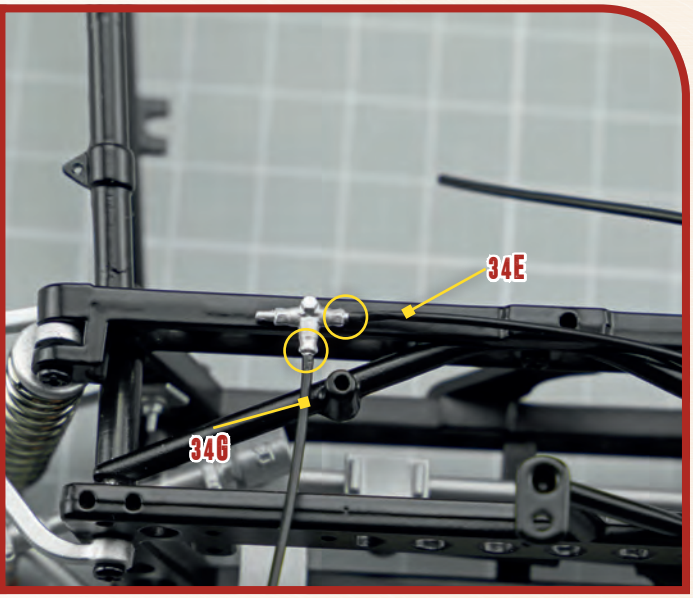

E

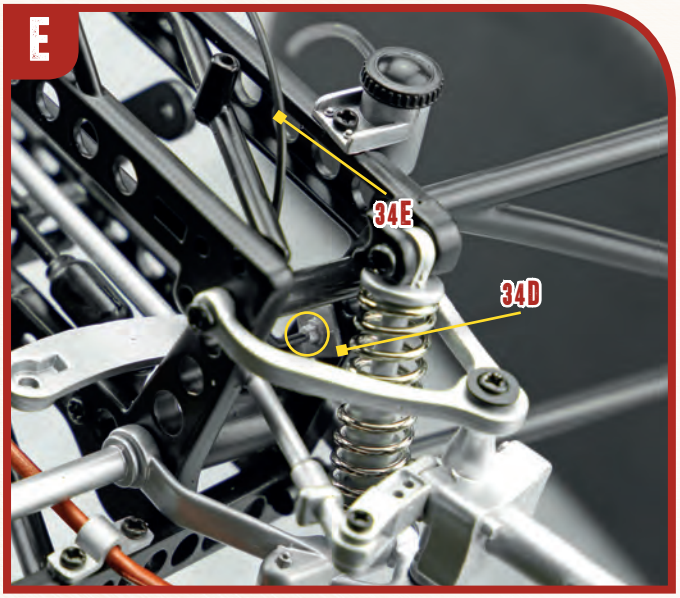

F

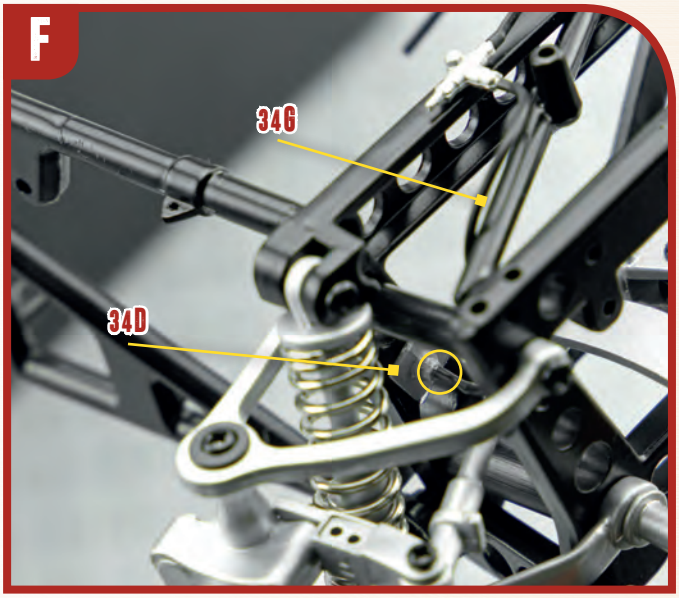

35 PARTS LIST

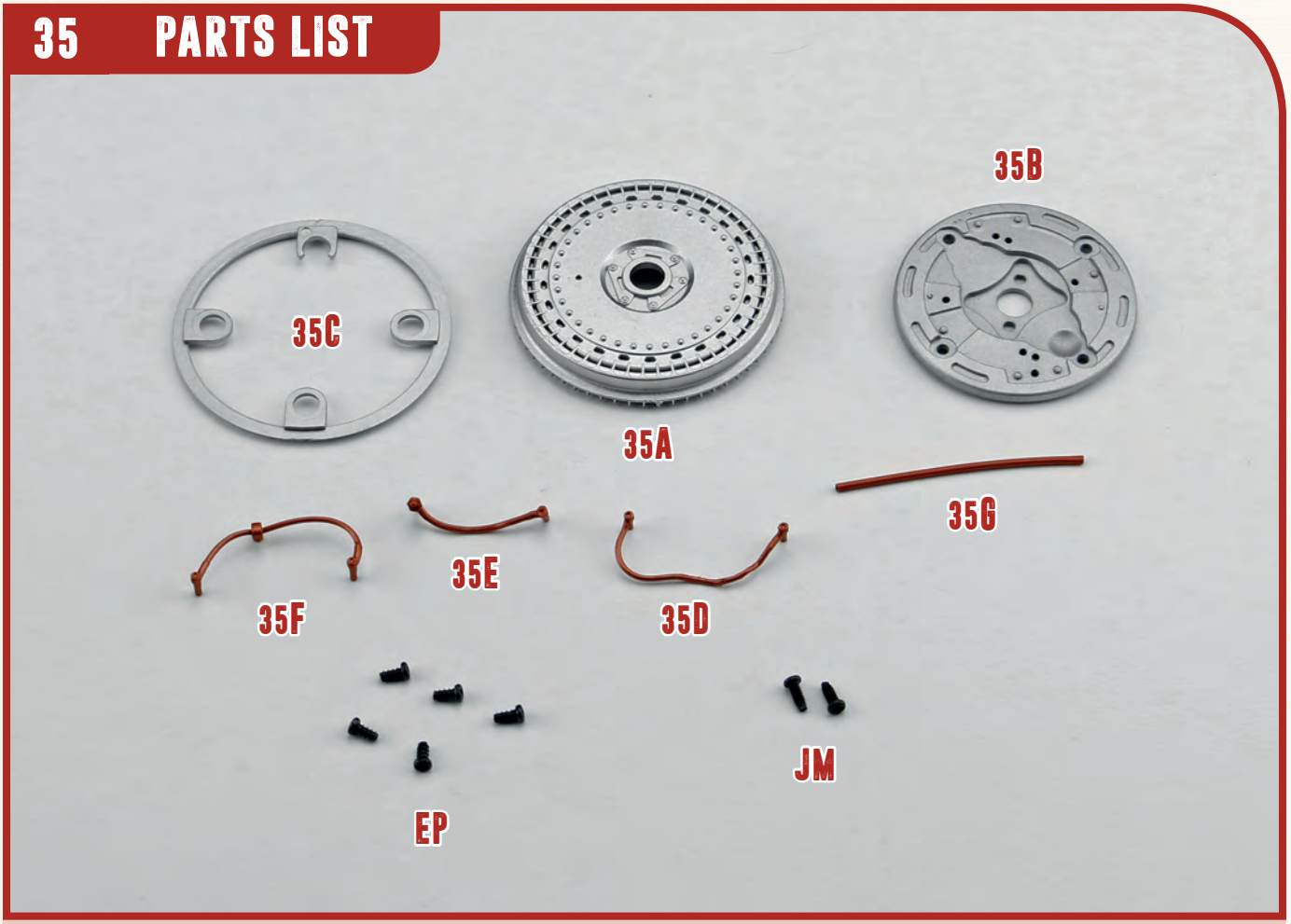

35A Brake drum
35B Brake plate part A
35C Brake plate part B
35D Brake drum cable 1
35E Brake drum cable 2
35F Brake drum cable 3
35G Brake drum cable 4
EP 5 screws (2x4mm)
JM 2 screws (2x5mm)

A

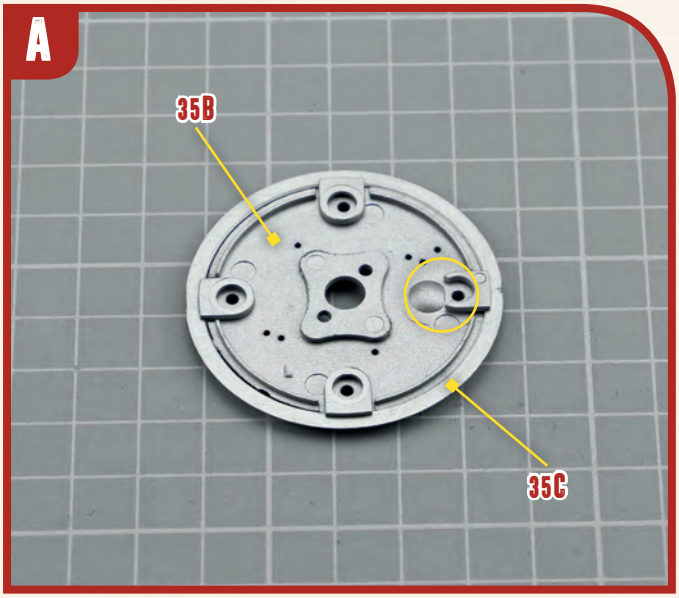

B

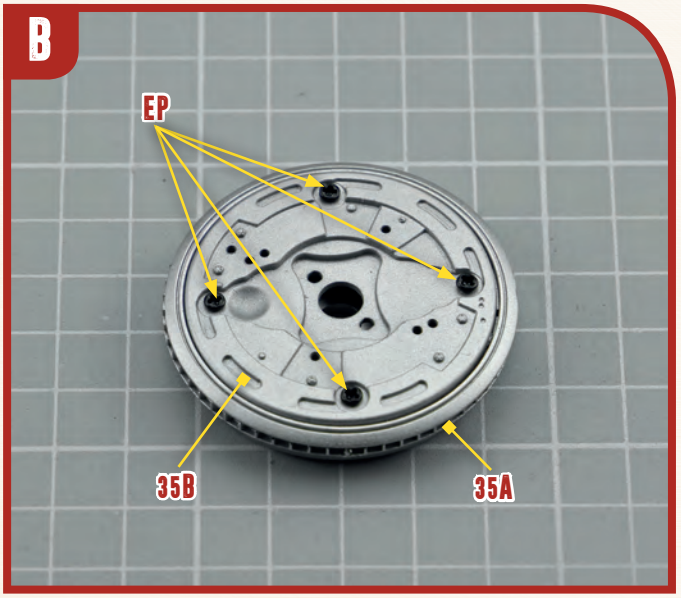

C

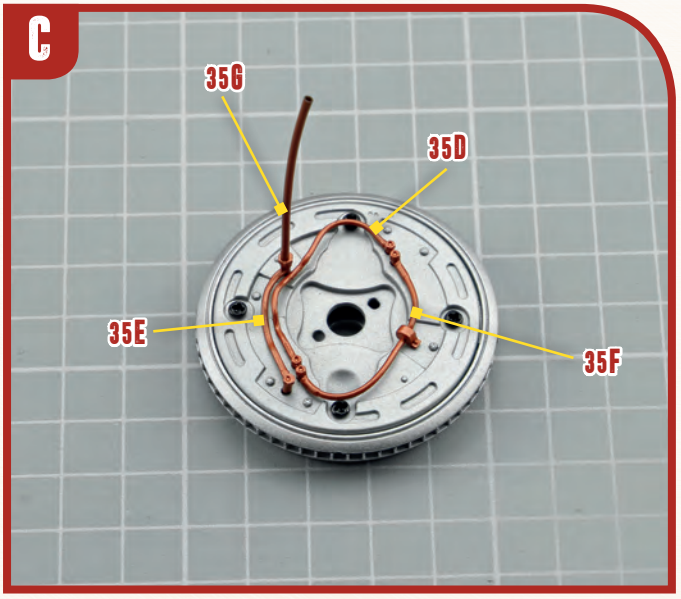

D

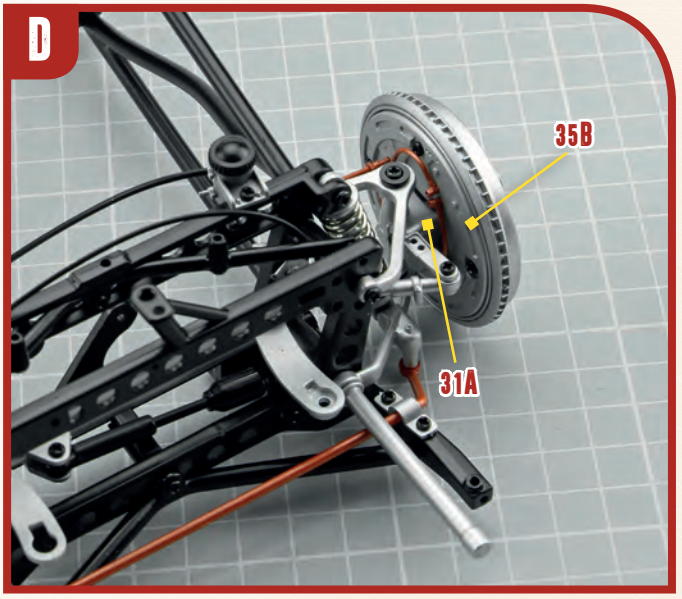

E

Attach front left wheel to brake drum 35A

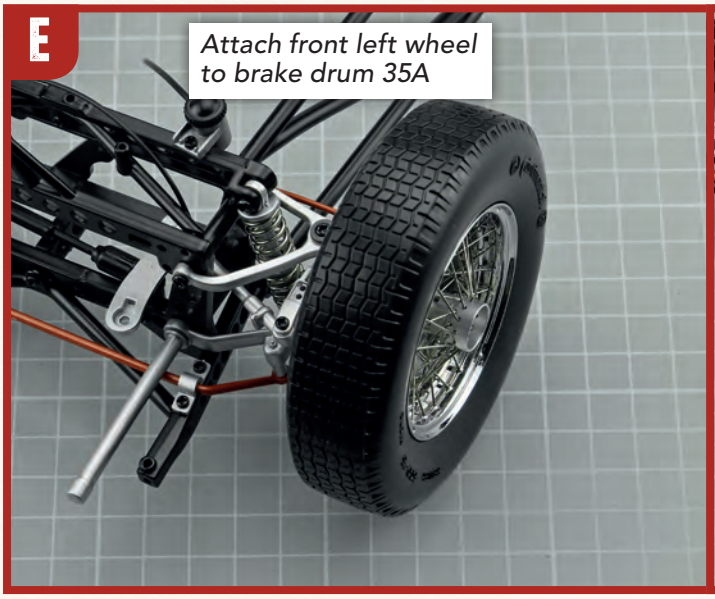

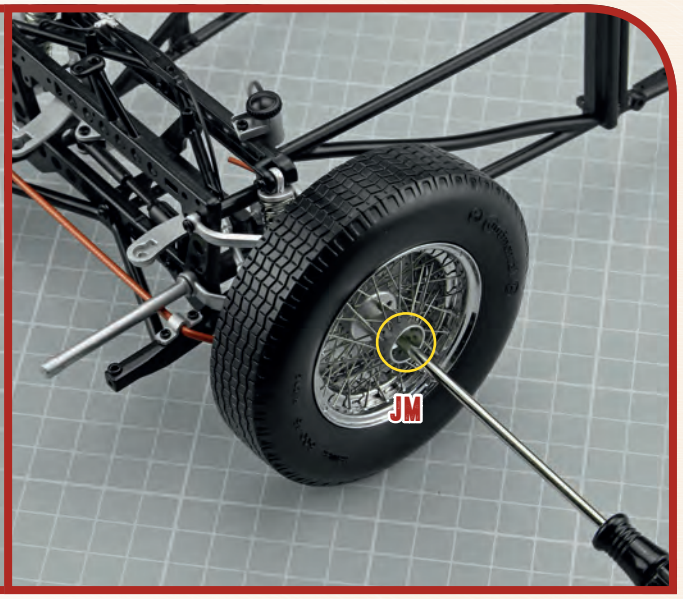

F

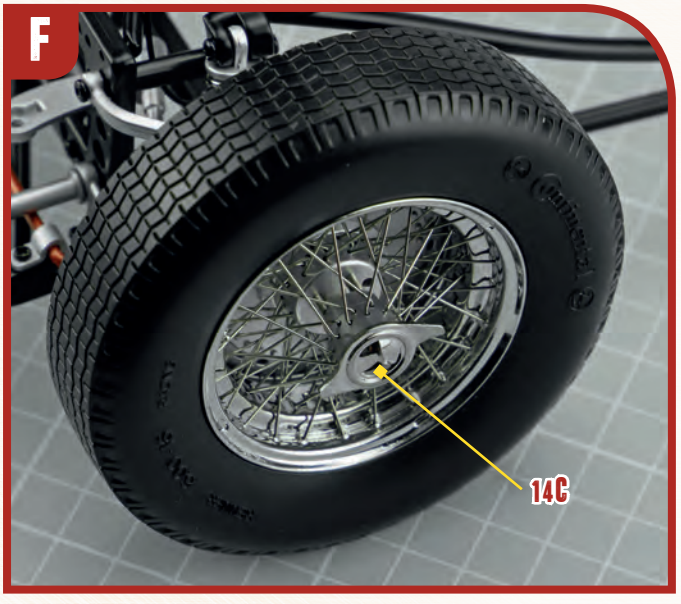

G

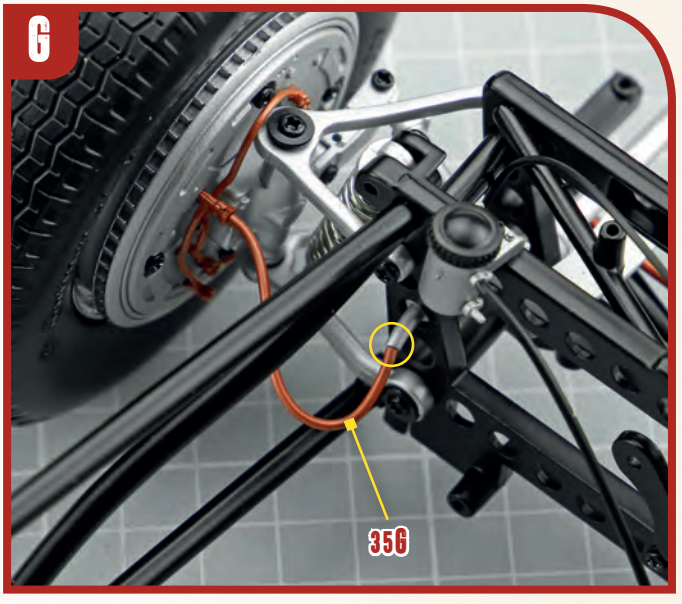

36 PARTS LIST



36A	Brake drum
36B	Brake plate part A
36C	Brake plate part B
36D	Brake drum cable 1
36E	Brake drum cable 2
36F	Brake drum cable 3
36G	Brake drum cable 4
EP	5 screws (2x4mm)

A

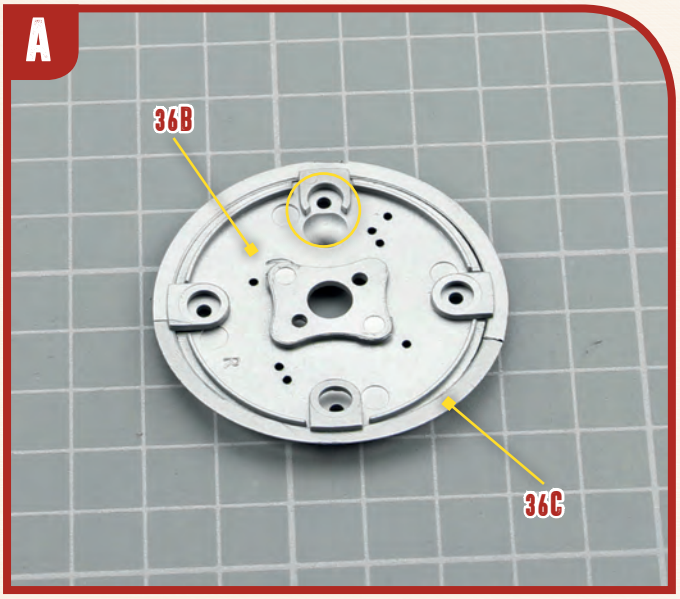

B

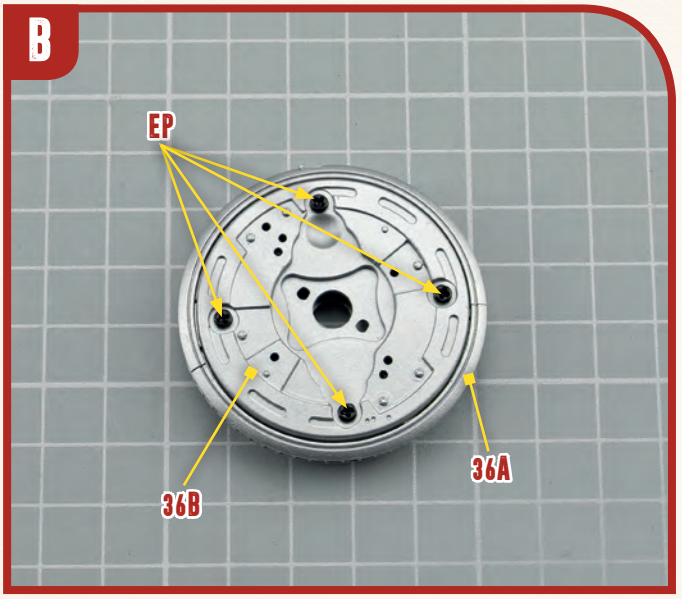

C

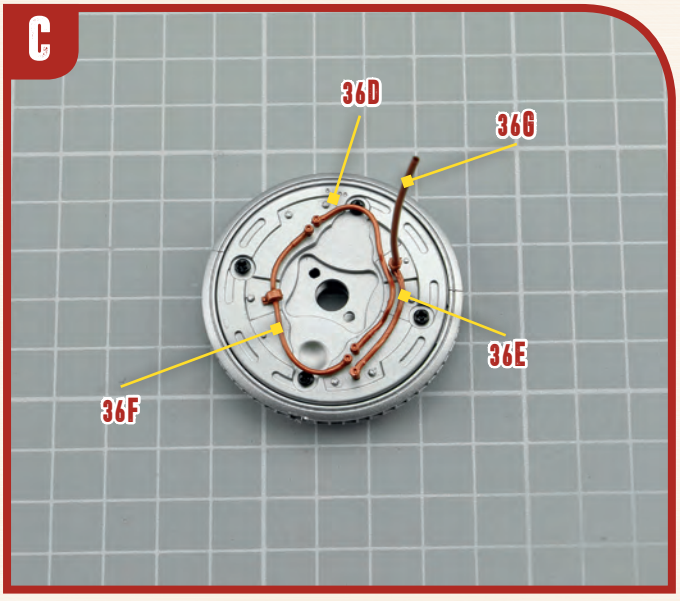

D

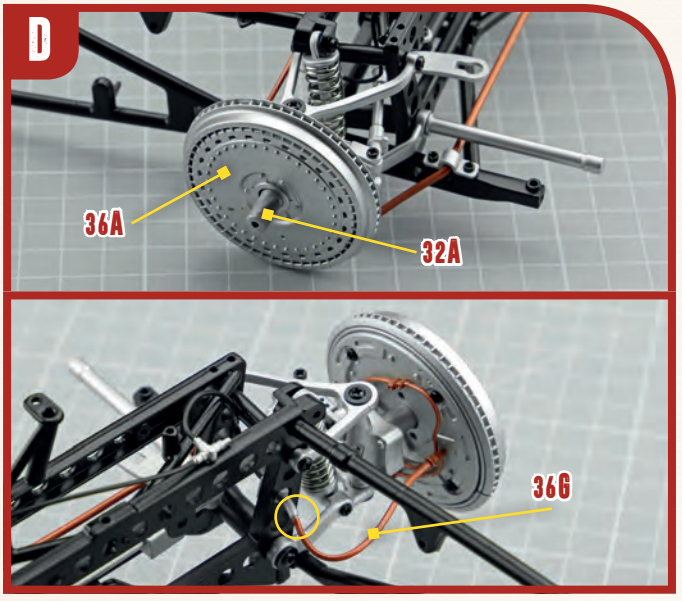

37 PARTS LIST

REGULAR ASSEMBLY

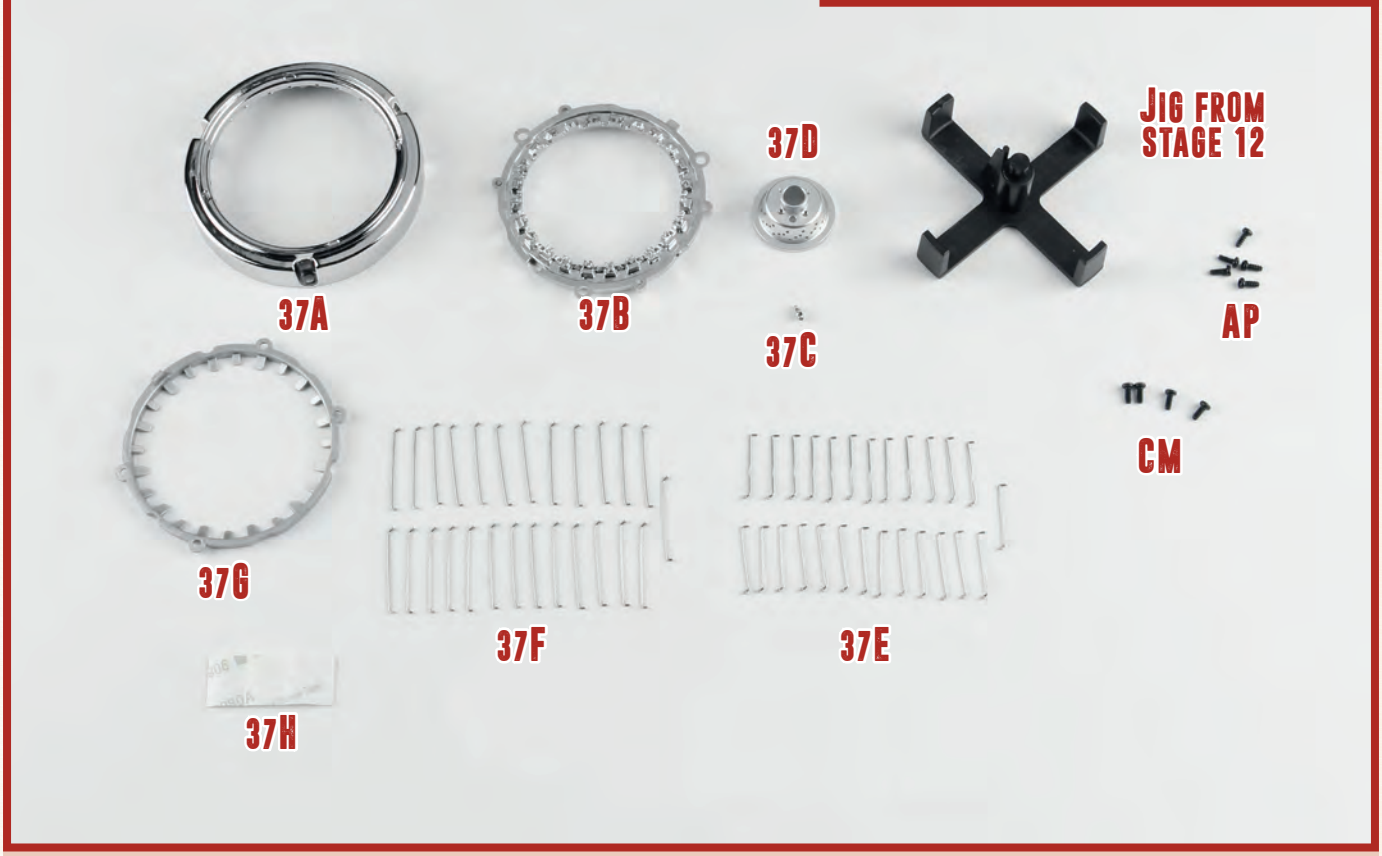

37A Outer rim
37B Central ring 1
37C Inflation valve
37D Hub 1
37E Spokes 1
37F Spokes 2
37G Central ring 2
37H Double-sided tape
AP 5 screws (1.7x4mm)
CM 4 screws (1.7x4mm)

A

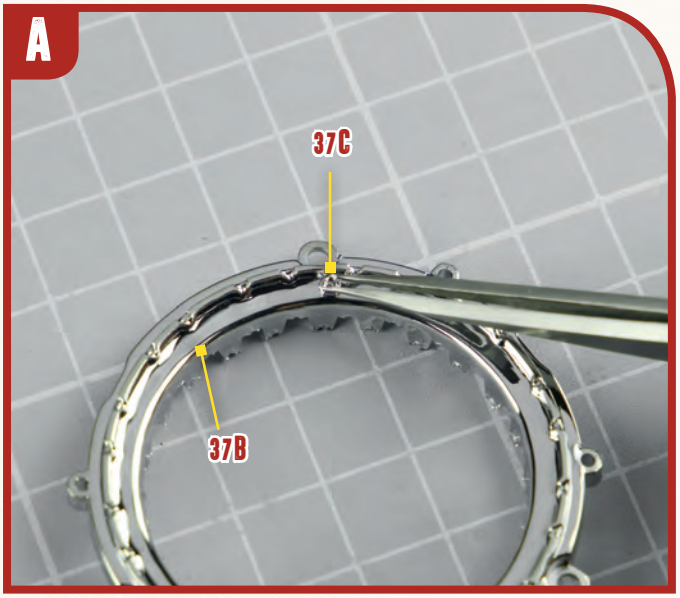

B

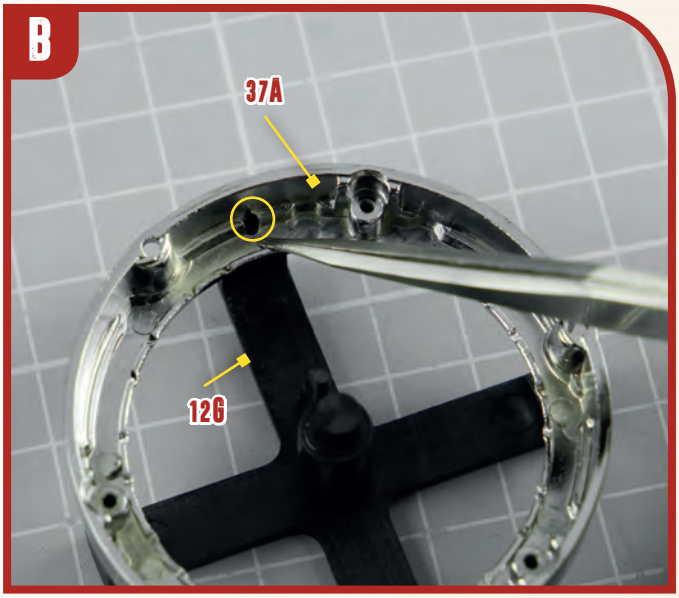

C

Apply 24 pieces of double-sided tape 37H to 37A's inner profile and tear off their top sheets.

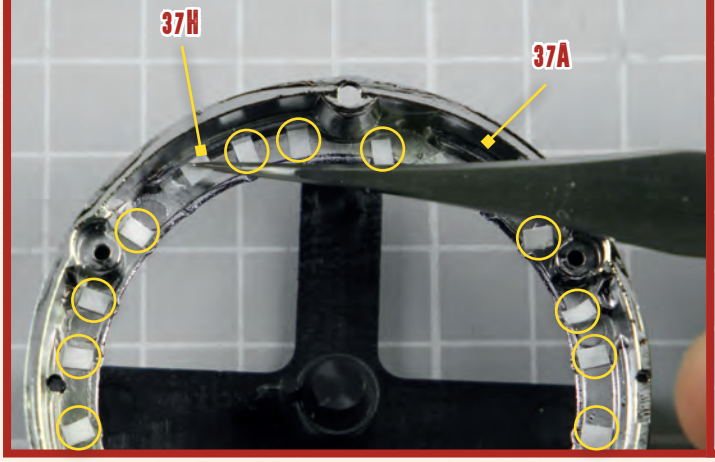

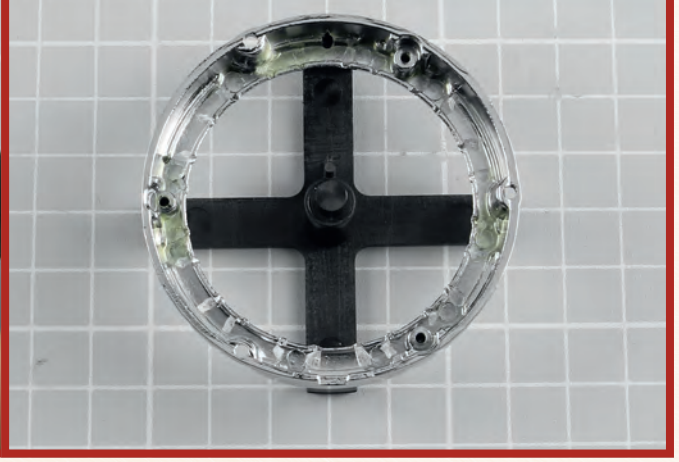

D

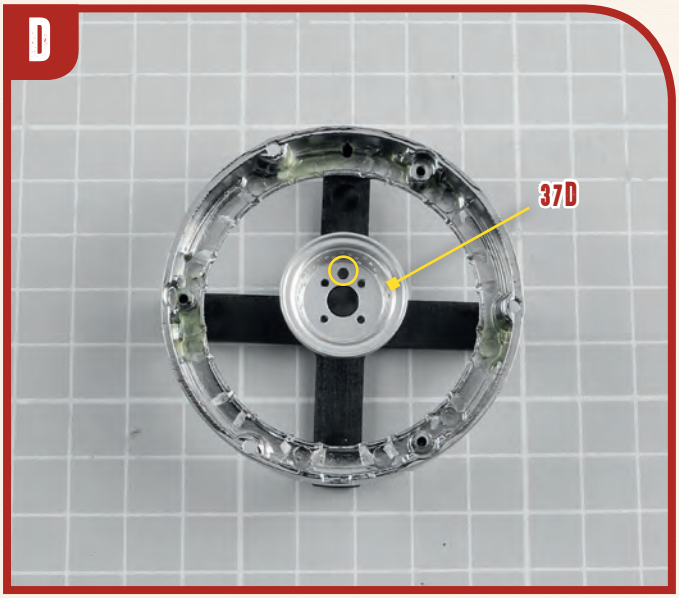

E

Insert 1 spoke 37F through a hole in 37D's first level (counting from the bottom).

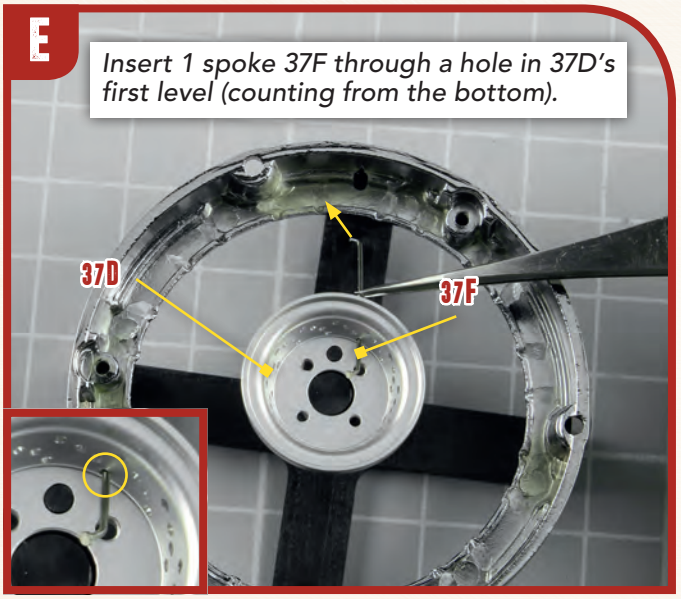

F

Repeat the process with other 11 spokes 37F.

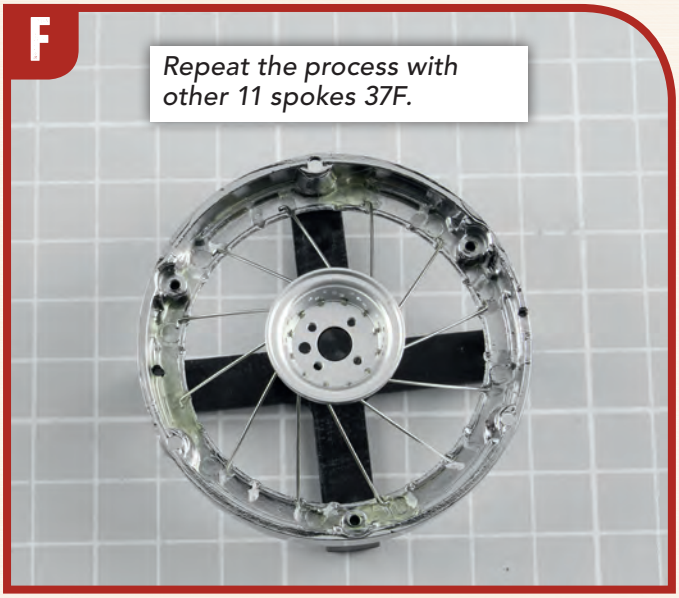

G

Insert 12 spokes 37F through 37D's third level of holes.

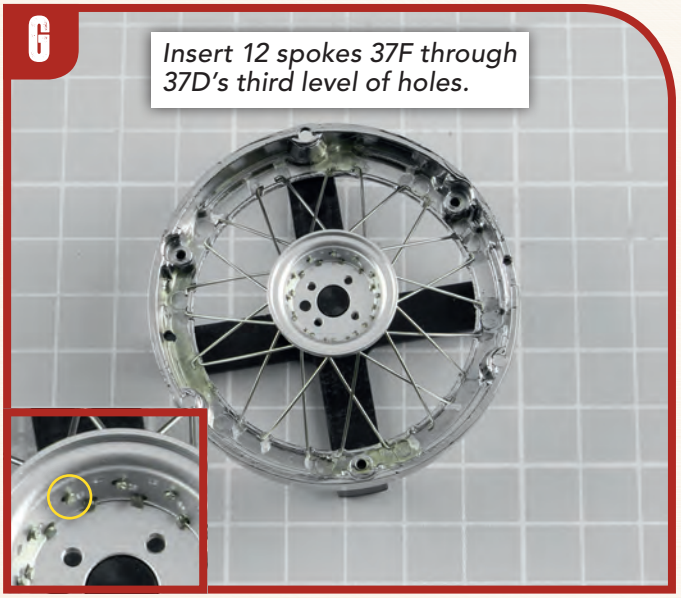

H

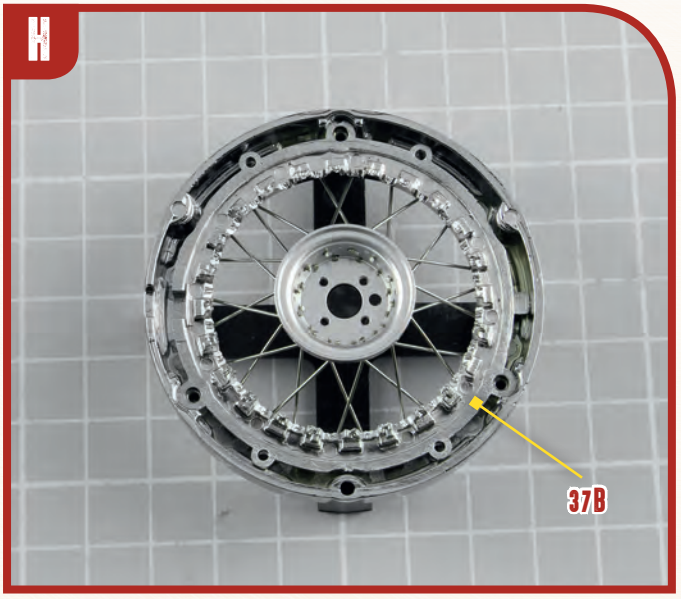

I

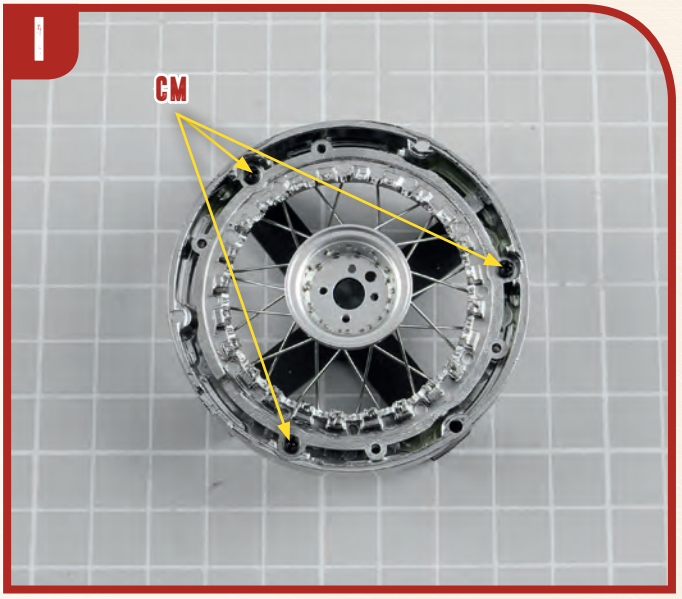

J

Insert 12 spokes 37E through 37D's second level of holes.



K

Insert 12 spokes 37E through 37D's fourth level of holes.

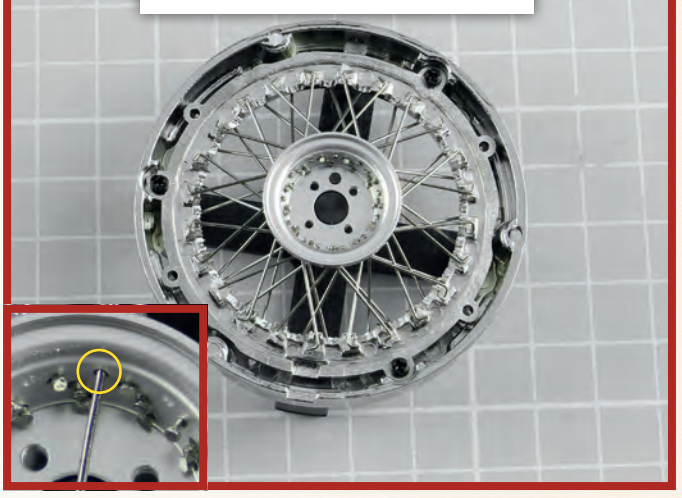

L

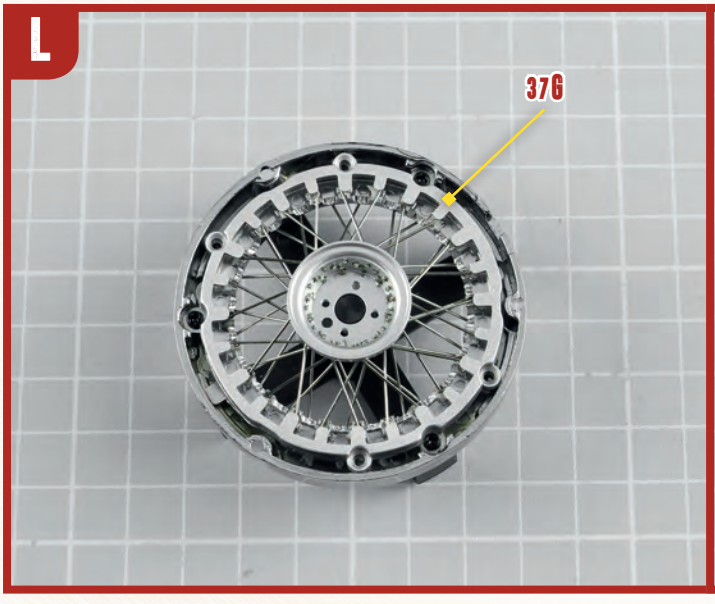

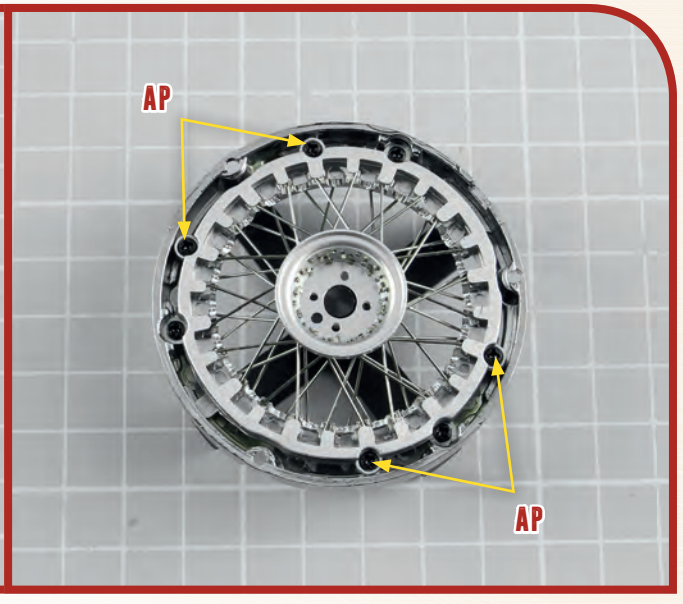

37B PARTS LIST

EASY ASSEMBLY



37AA	Central ring 1	**37GG**	Spokes 2
37BB	Hub 1		
37CC	Hub 2	**LP**	5 screws (1.5x3mm)
37DD	Hub 3	**TP**	4 screws (1.5x5mm)
37EE	Hub 4	**UP**	4 screws (1.7x4mm)
37FF	Spokes 1		

A

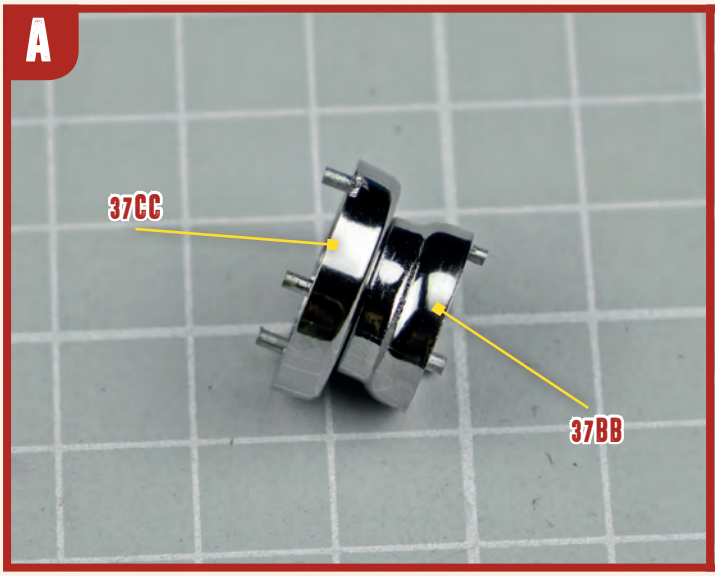

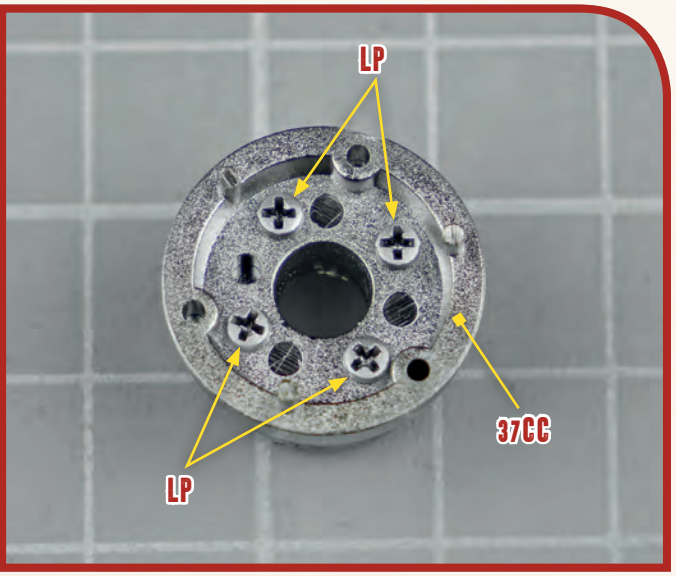

B

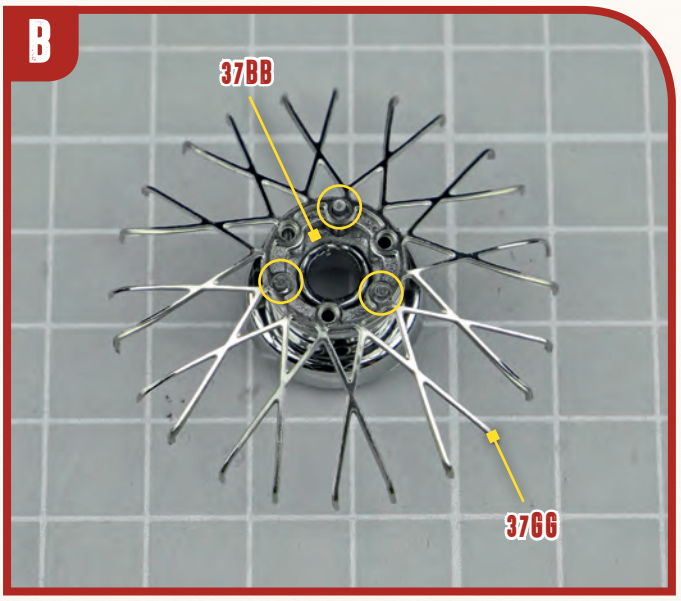

C

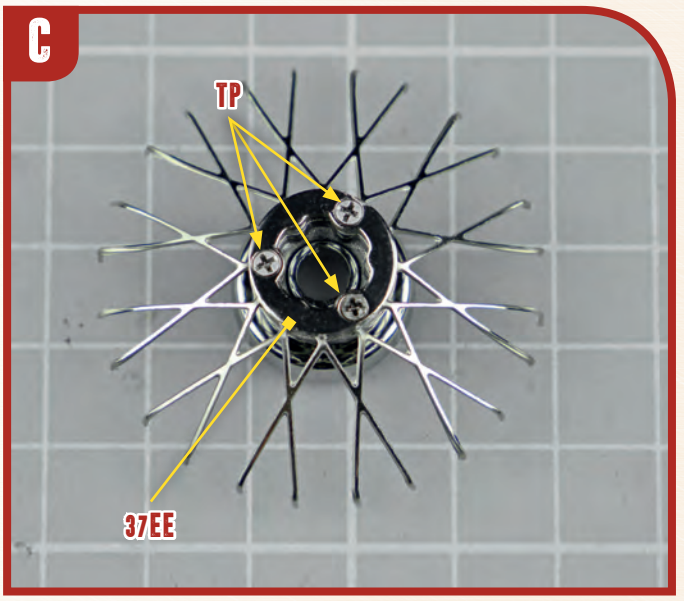

D

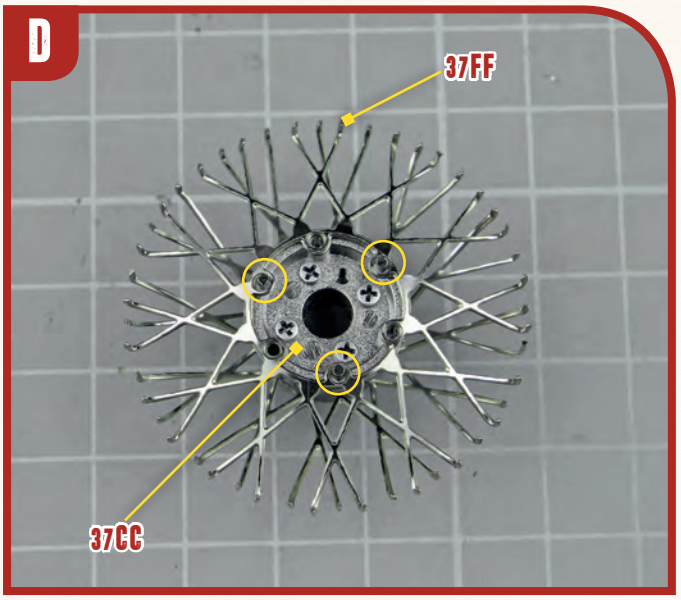

E

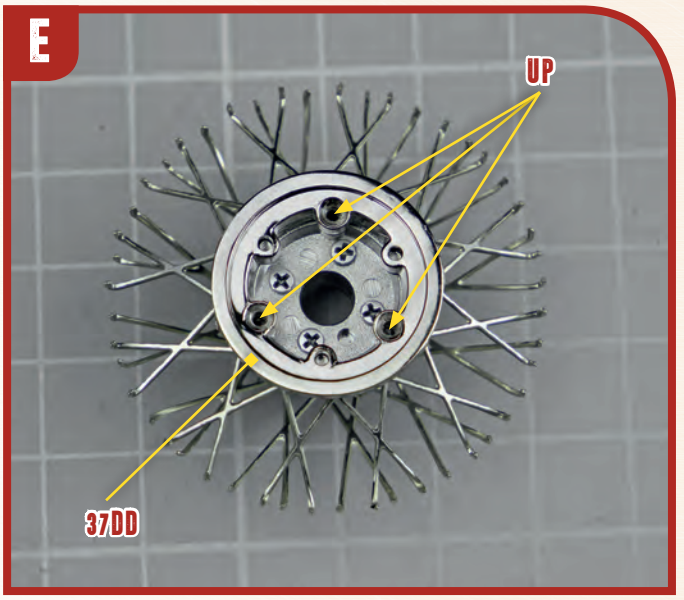

F

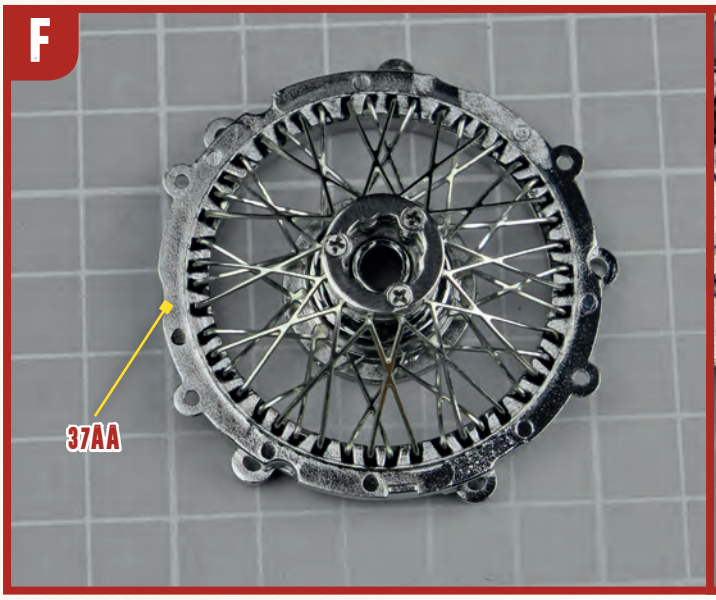



Insert spokes one by one

38 PARTS LIST

REGULAR ASSEMBLY

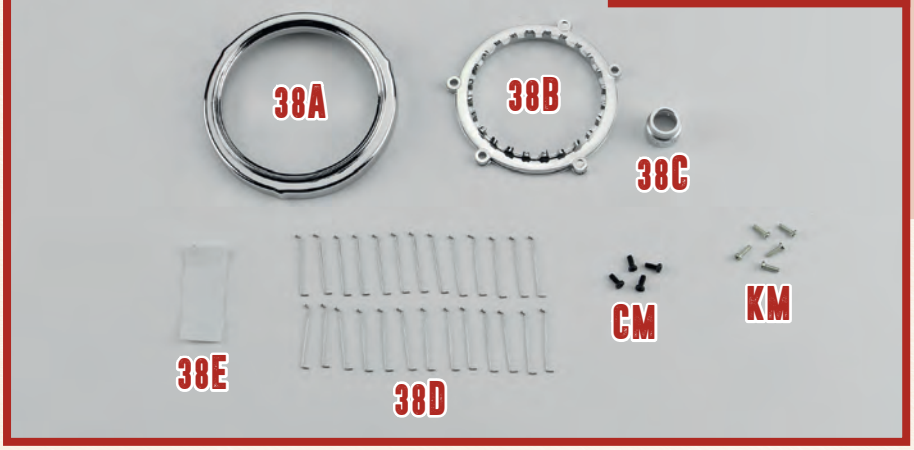

38A	Inner rim
38B	Central ring 3
38C	Hub 2
38D	Spokes 3
38E	Double-sided tape
CM	4 screws (1.7x4mm)
KM	5 screws (1.5x5mm)

A

Apply 24 pieces of double-sided tape 38E to 37B's inner profile and tear off their top sheets.



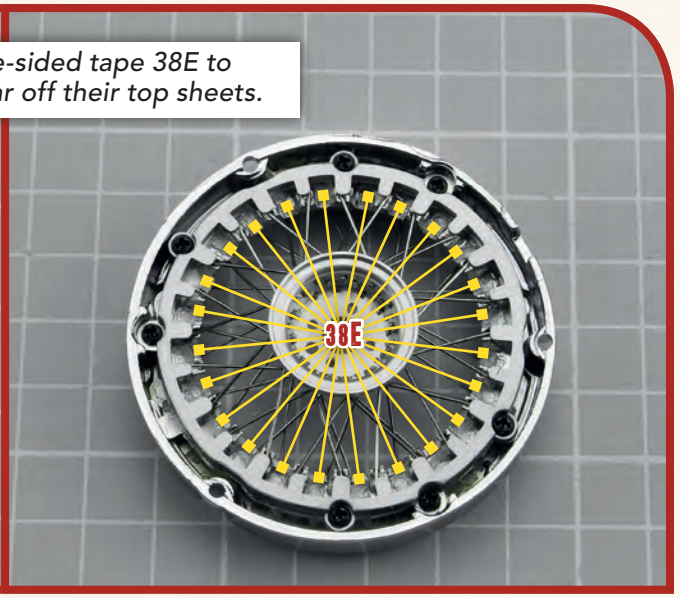

B

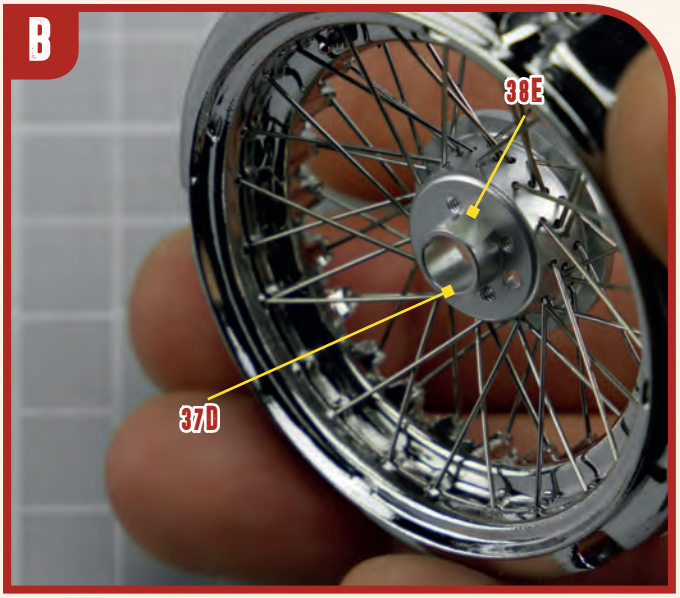

C



D

Insert 1 spoke 38D through a hole in 38C's first level (counting from the bottom). Place its thinner end as shown, on tape 38E.

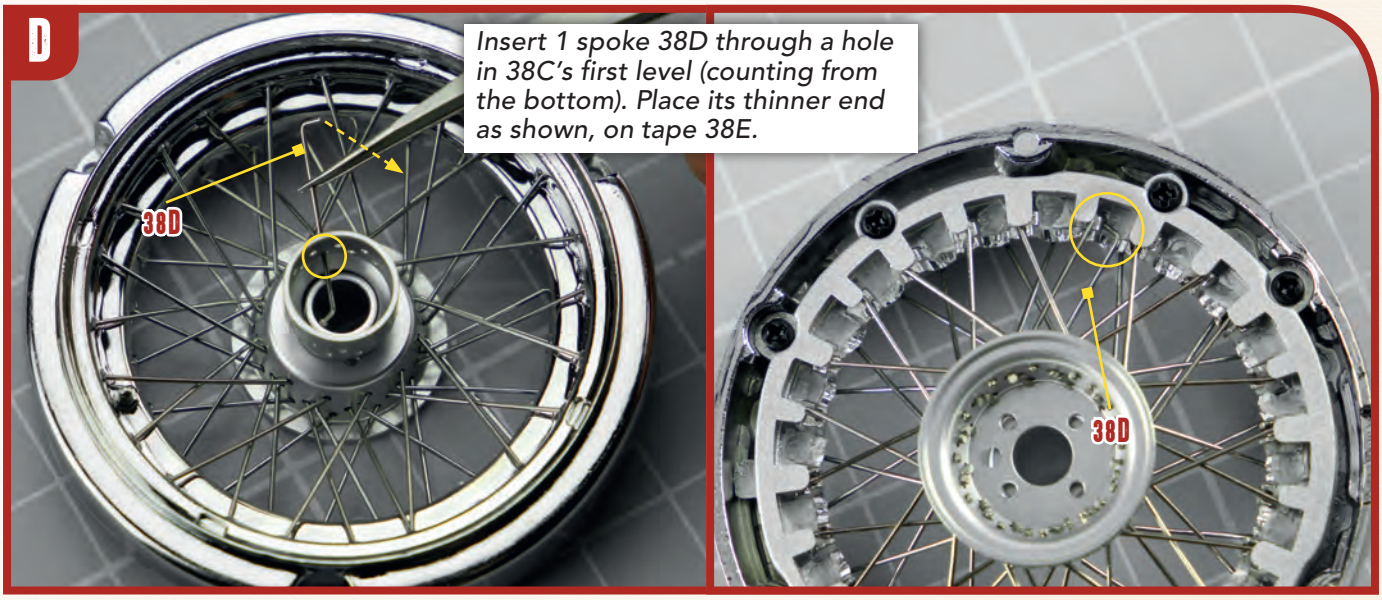

E

Repeat the process with other 11 spokes 38D. Leave one empty spot between the thinner ends of spokes 38D.



F

Insert 12 spokes 38D through 38C's second level of holes. Place their thinner ends on the empty spots from Step E, on tapes 38E.

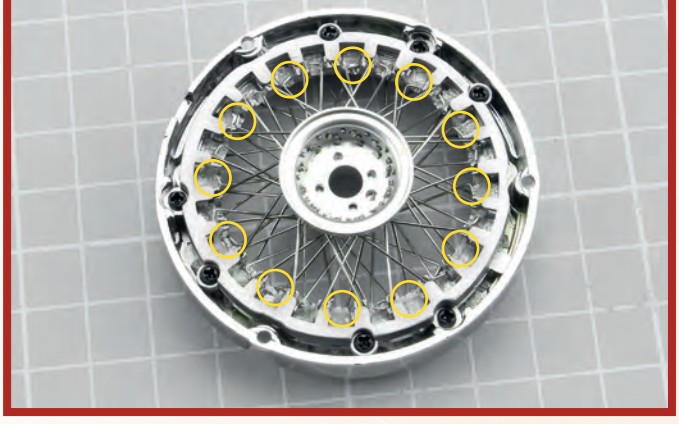

G

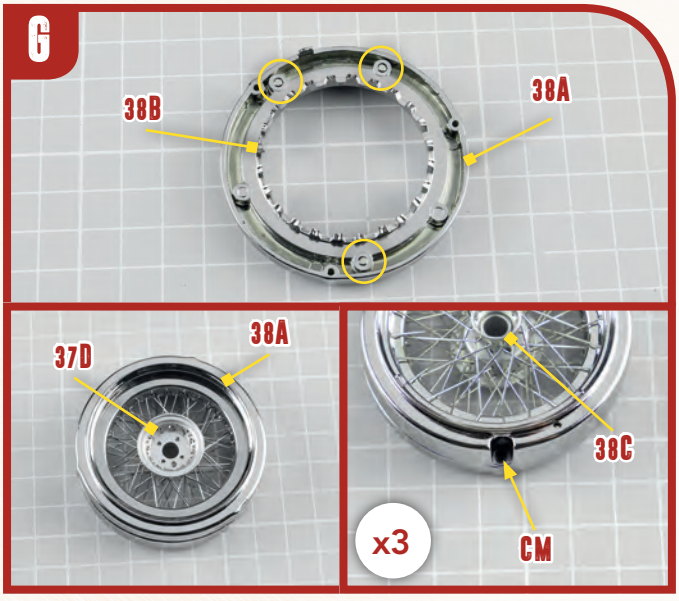

H

Tighten or loosen the four KM screws to adjust the position of the spokes.

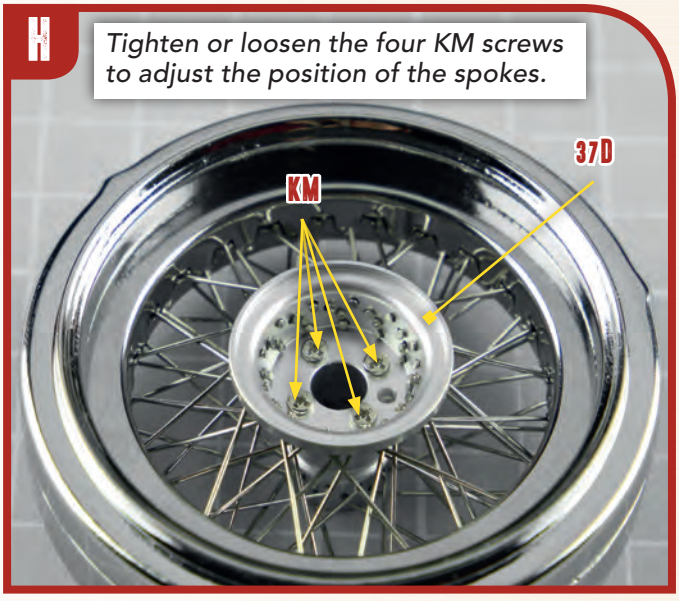

38B PARTS LIST

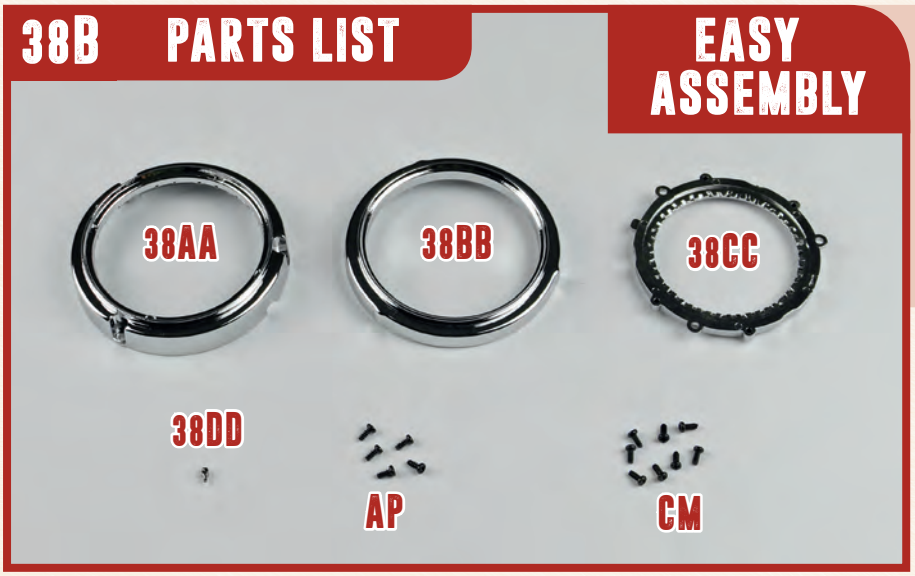

EASY ASSEMBLY

38AA Outer rim
38BB Inner rim
38CC Central ring 2
38DD Inflation valve

AP 5 screws (1.7x4mm)
CM 8 screws (1.7x4mm)

A

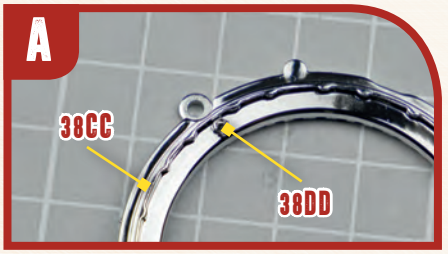

B

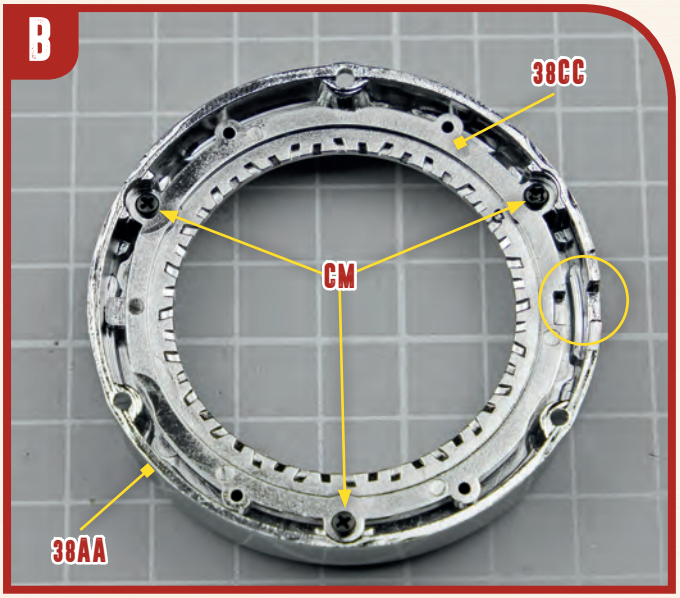

C

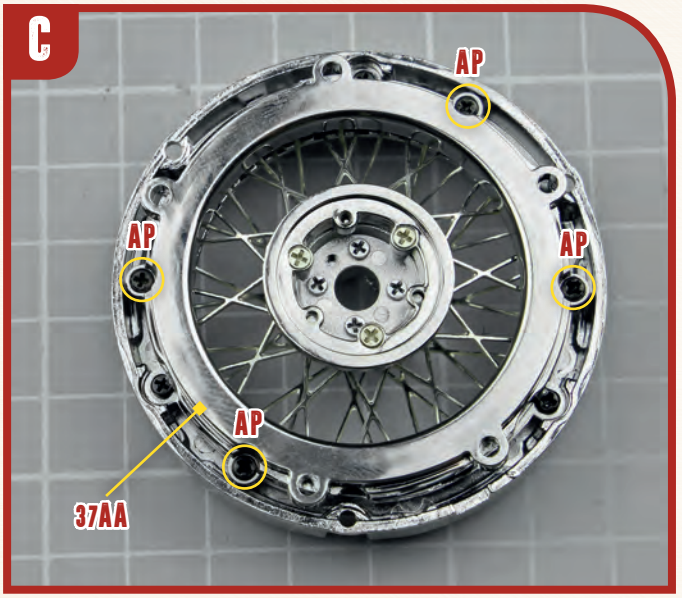

D



E

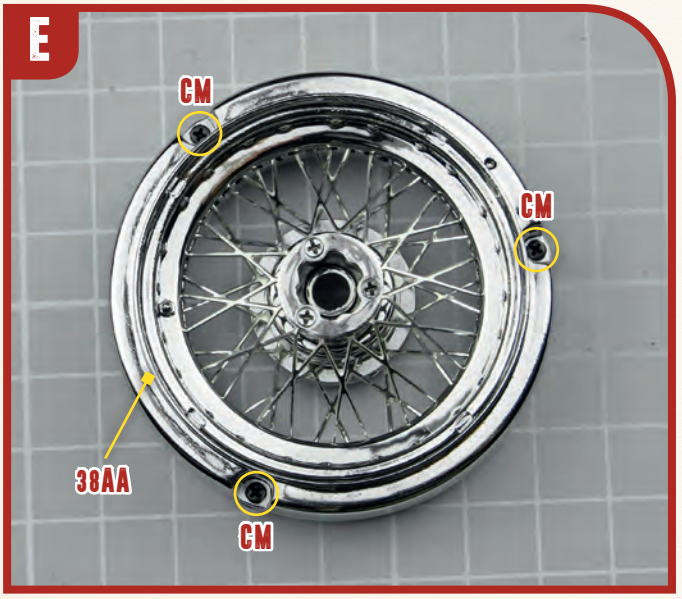

39 PARTS LIST

REGULAR ASSEMBLY



39A	Tyre
39B	Hub 3
39C	Hubcap
39D	Washer ring
JM	2 screws (2x5mm)

A

Soften tyre 39A by placing it in a bowl full of hot water.

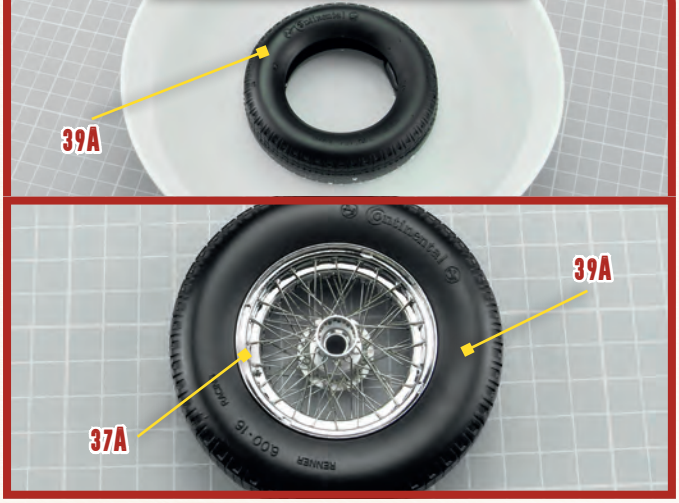

B

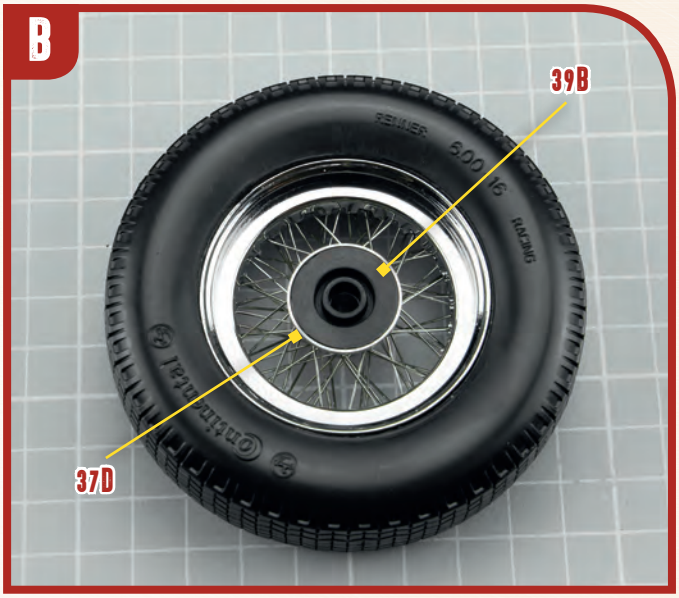

C

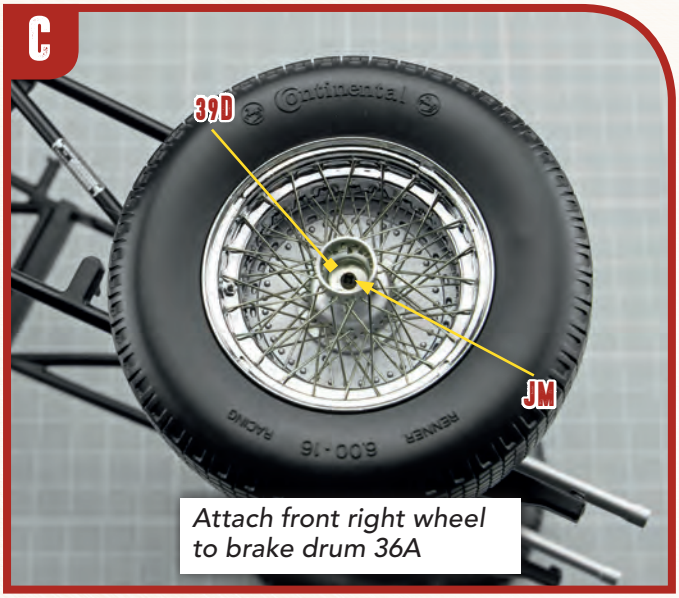

Attach front right wheel to brake drum 36A

D



39B PARTS LIST



39AA Tyre
39BB Hubcap
39CC Hub 5
39DD Washer ring

JM 2 screws (2x5mm)

A

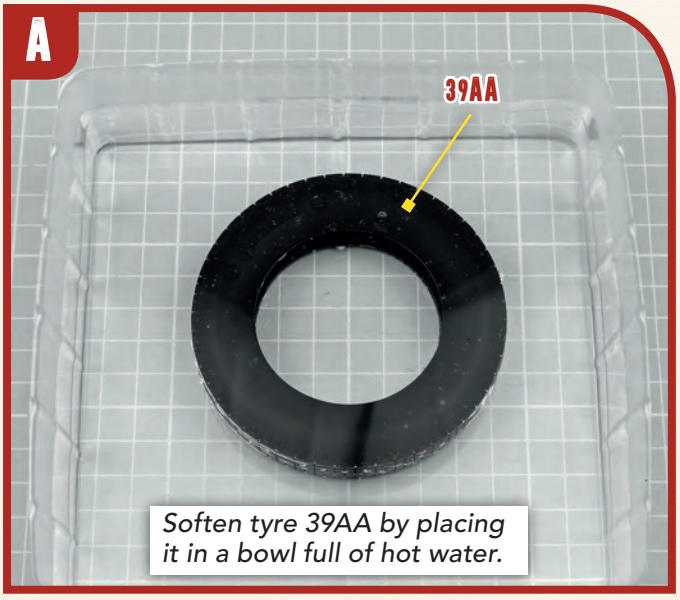

Soften tyre 39AA by placing it in a bowl full of hot water.

B



C

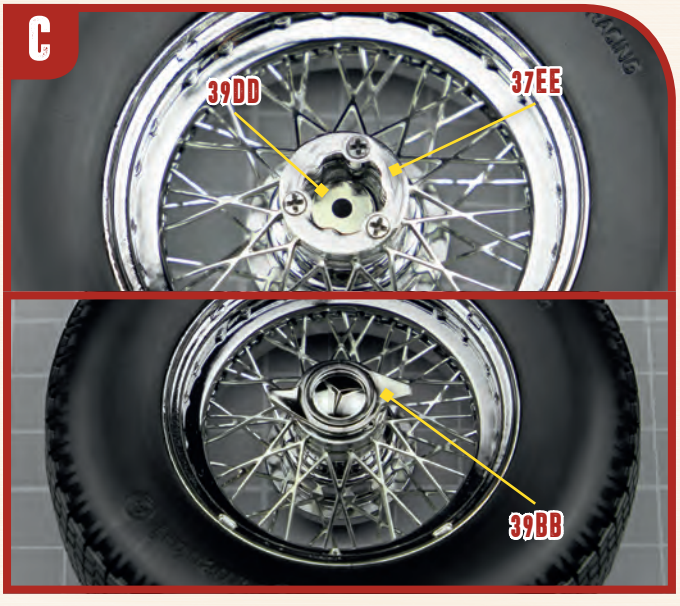

D

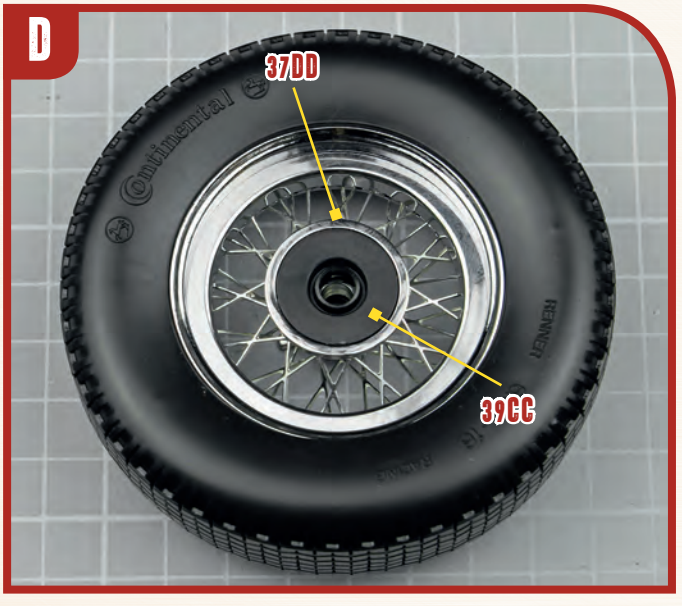

40 PARTS LIST

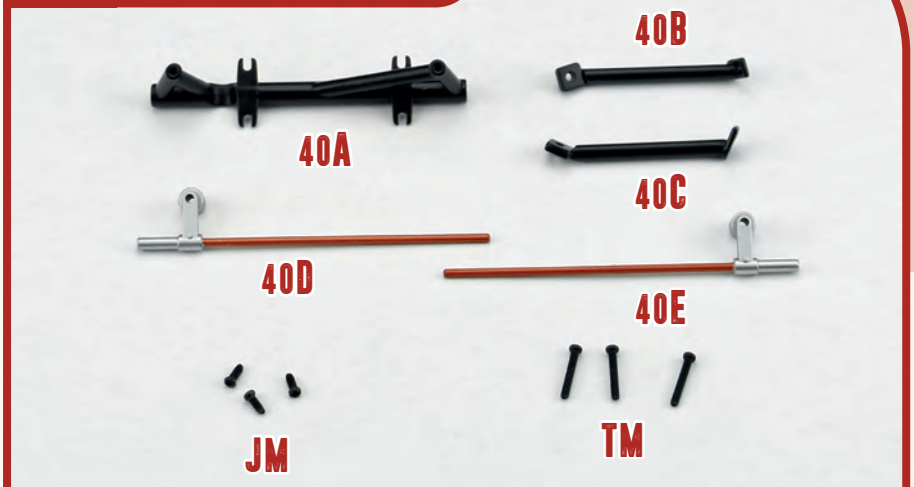

40A	Central crossbeam
40B	Left tube
40C	Right tube
40D	Left rear torsion bar
40E	Right rear torsion bar
JM	3 screws (2x5mm)
TM	3 screws (2x13mm)

A

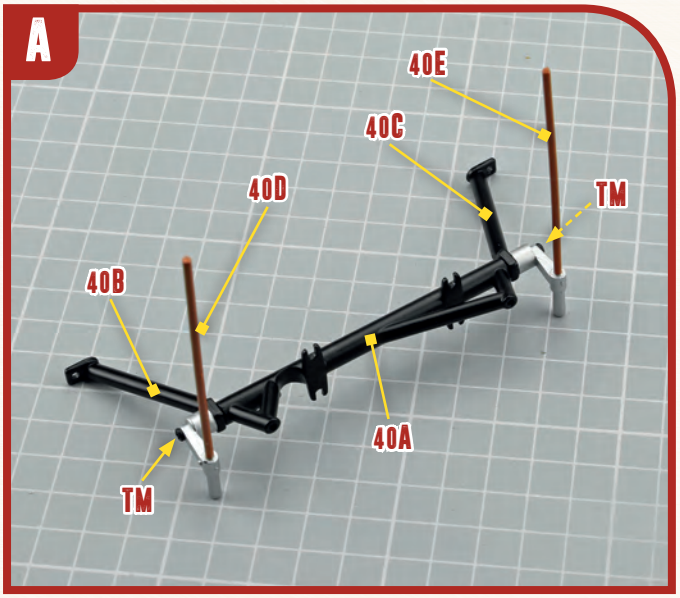

B

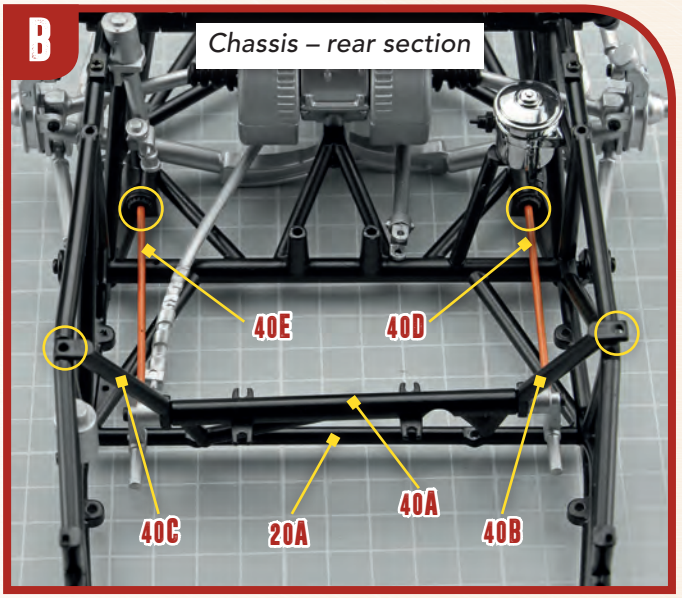

C

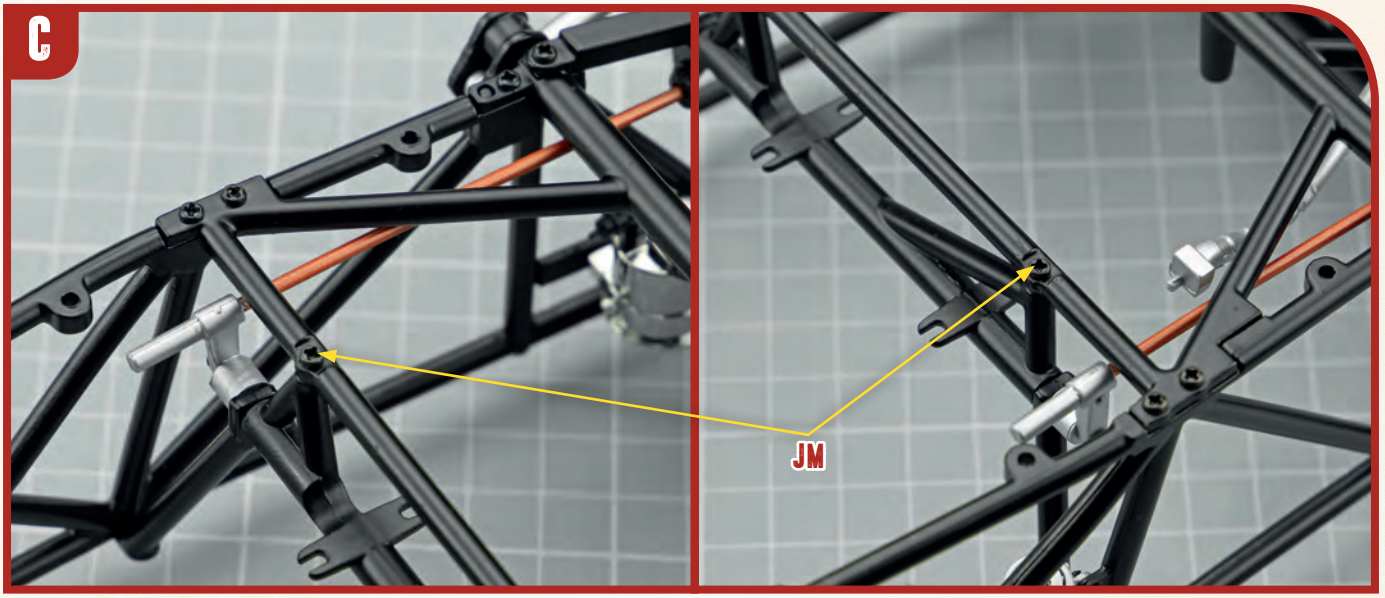

41 PARTS LIST

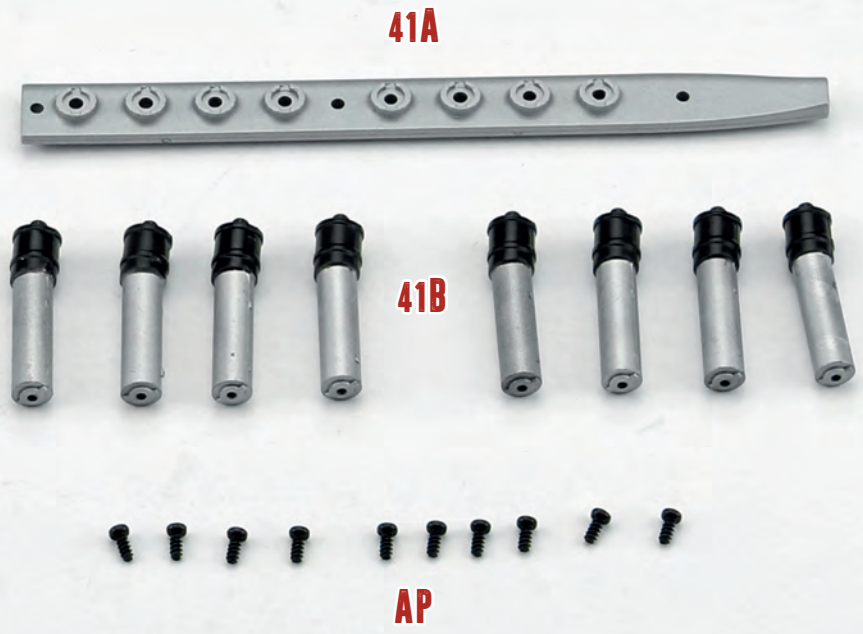

41A Inleft manifold
41B Pipes (x8)

AP 11 screws (1.7x4mm)

A

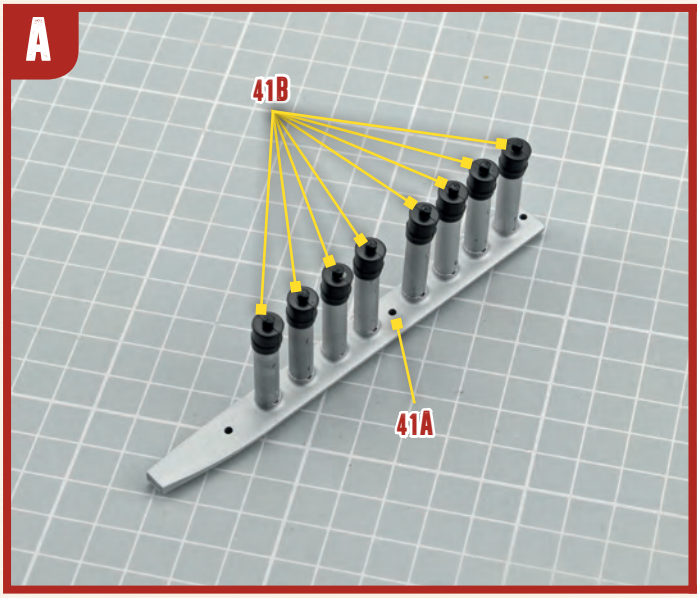

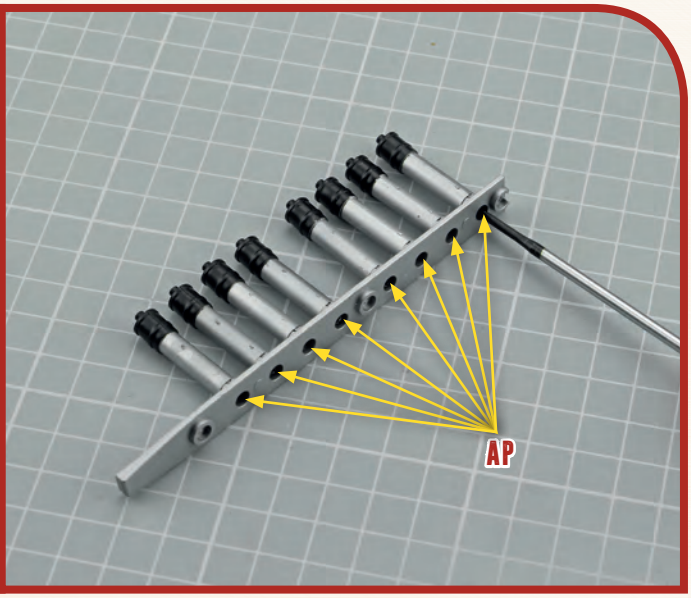

42 PARTS LIST



42A	Inlet manifold cover
42B	Throttle body
42C	Inlet manifold support
42D	Tube
BM	2 screws (1.7x3mm)
BP	2 screws (2x5mm)
HP	4 screws (1.7x5mm)

A

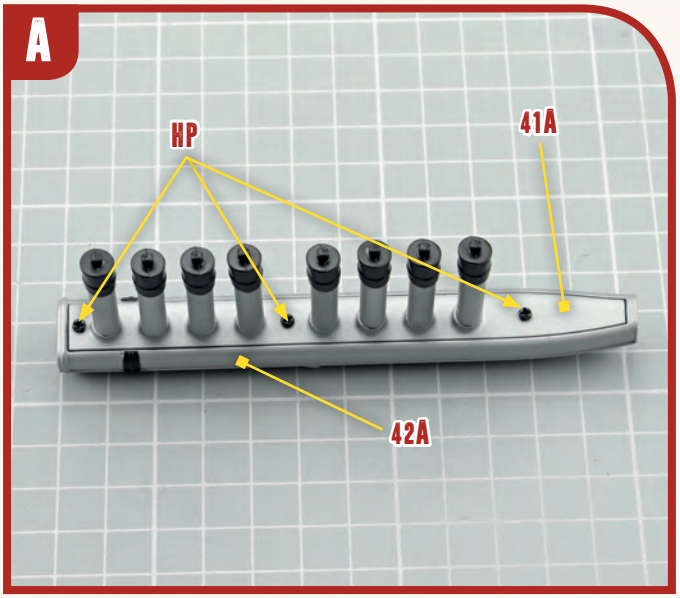

B

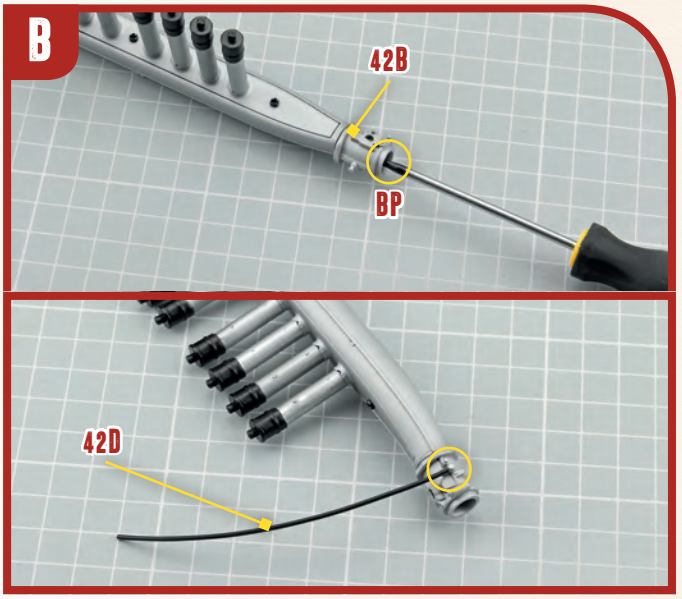

C

Couple inlet manifold to engine

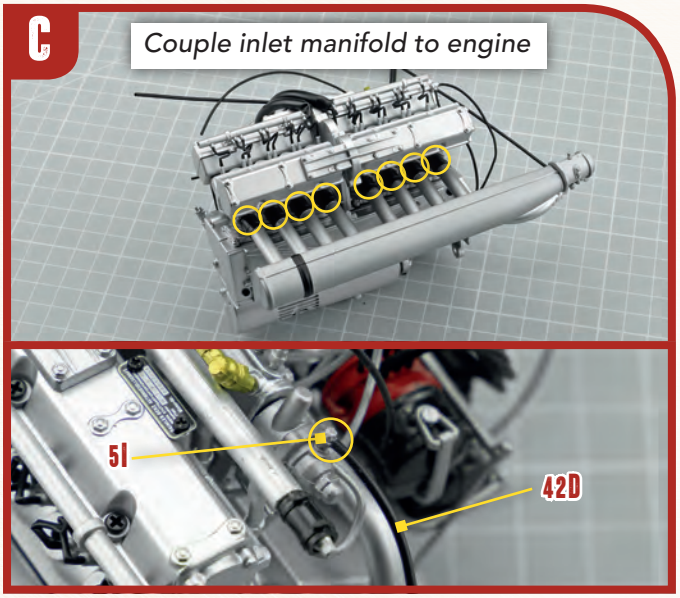

D

Chassis – front right section

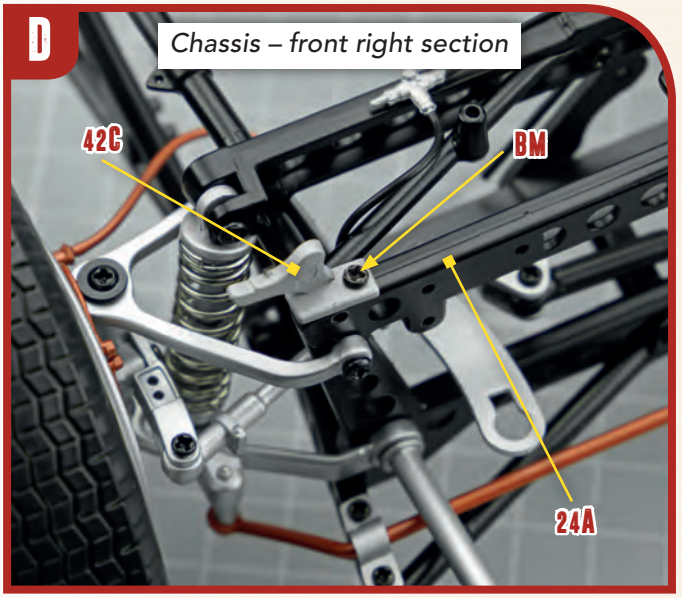

43 PARTS LIST

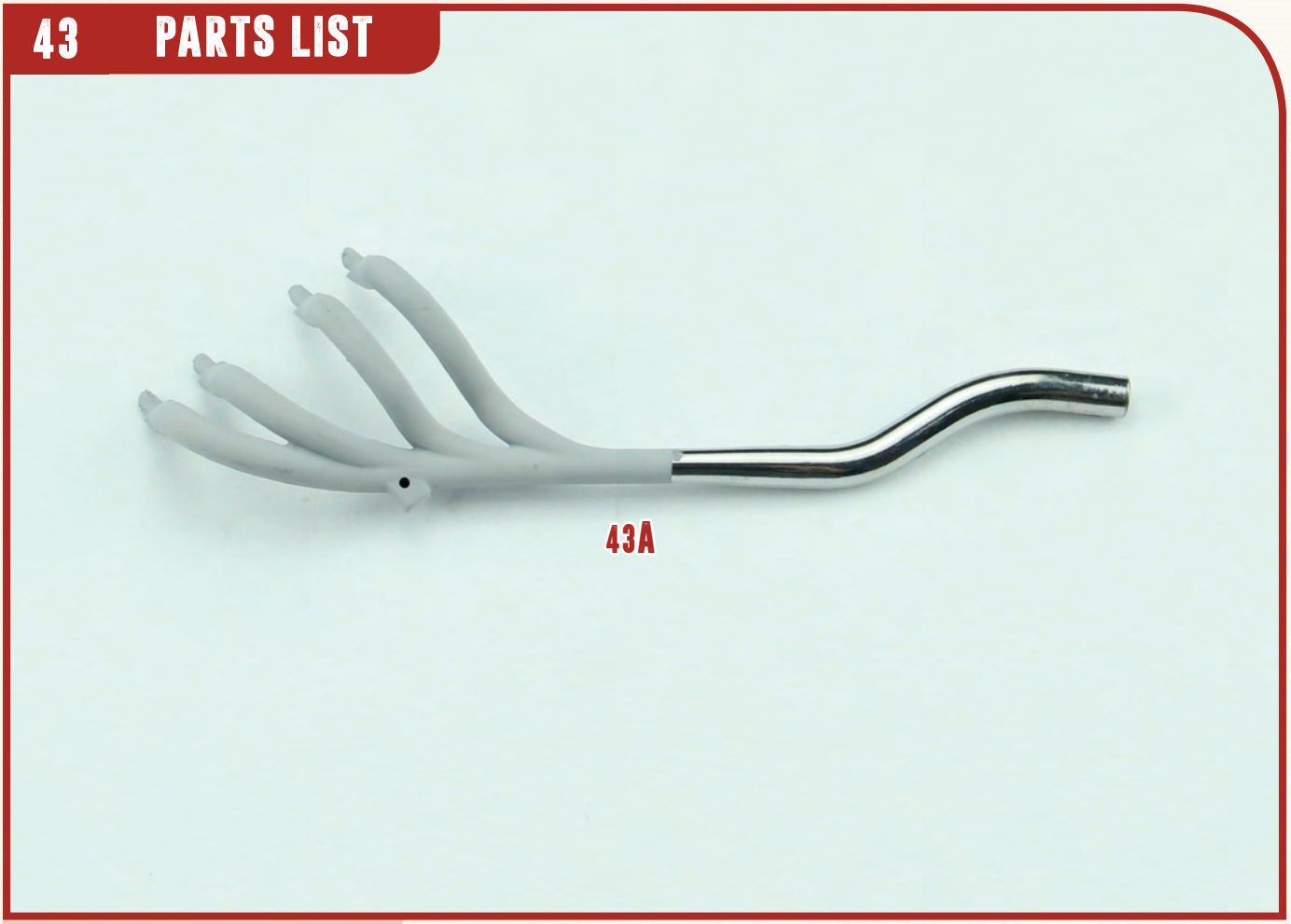

43A Exhaust manifold

A

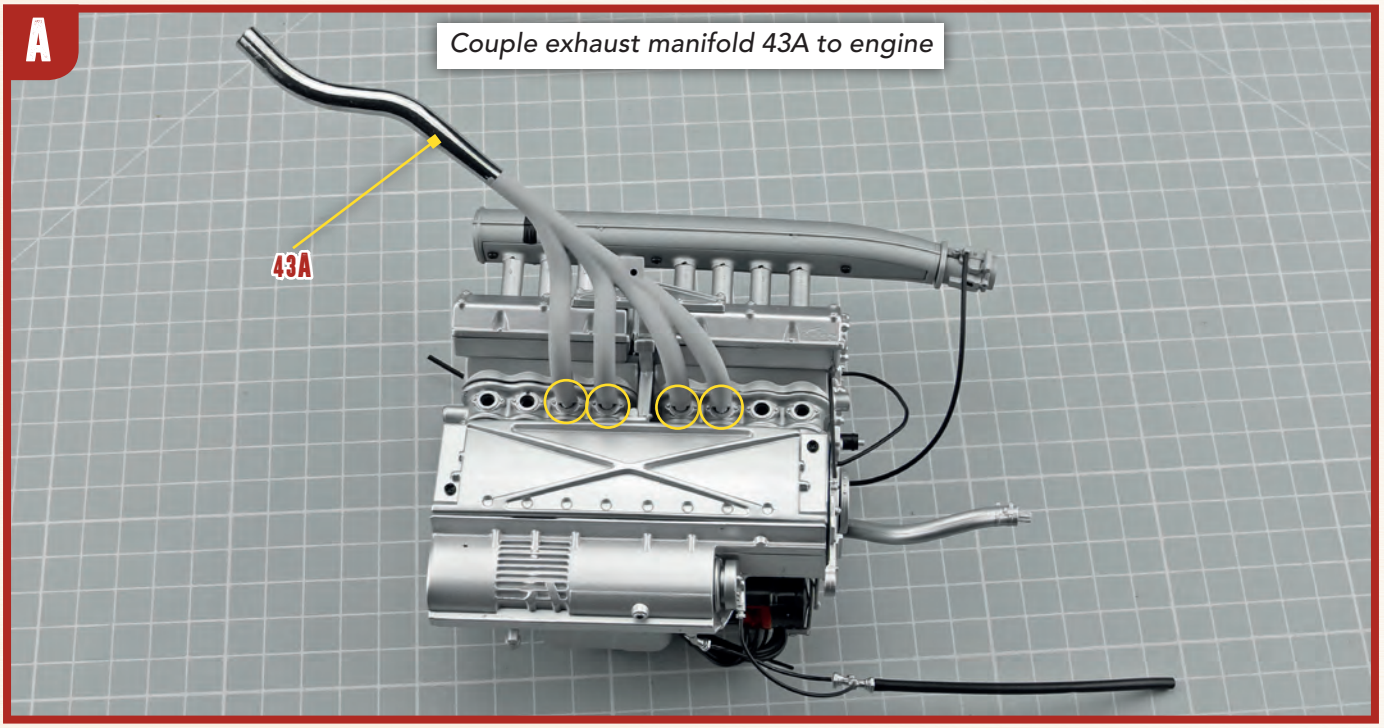

44 PARTS LIST

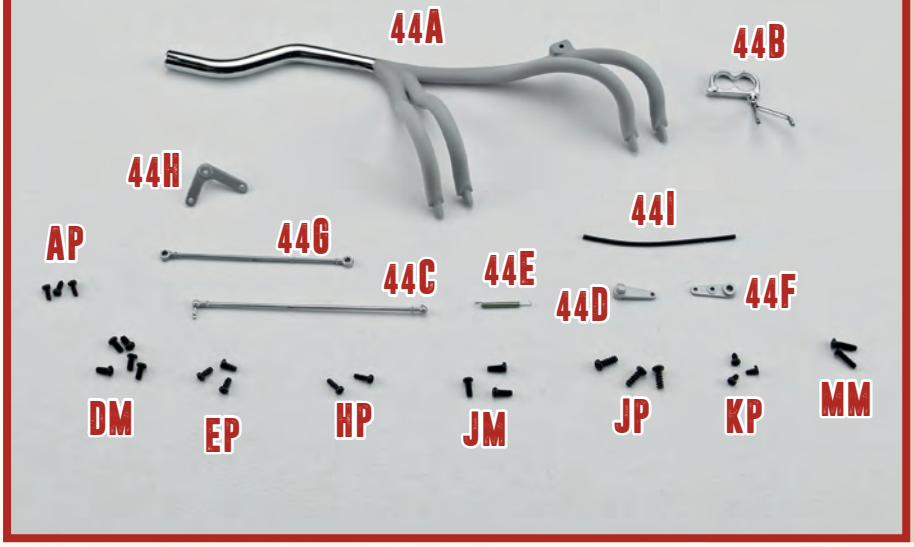

44A	Exhaust manifold
44B	Flange
44C	Accelerator rod 1
44D	Lever 1
44E	Spring
44F	Lever 2
44G	Accelerator rod 2
44H	Lever 3
44I	Fuel line 4 (replacement)

AP	3 screws (1.7x4mm)
EP	3 screws (2x4mm)
HP	2 screws (1.7x5mm)
JP	3 screws (2.3x6mm)
KP	3 screws (1.7x3mm)
DM	5 screws (2x4mm)
JM	3 screws (2x5mm)
MM	2 screws (2x7mm)

A

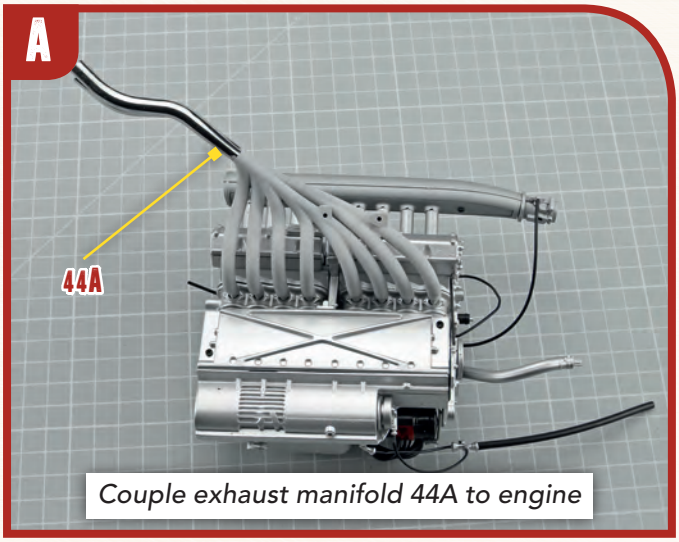

Couple exhaust manifold 44A to engine

B

Couple firewall 18A to engine

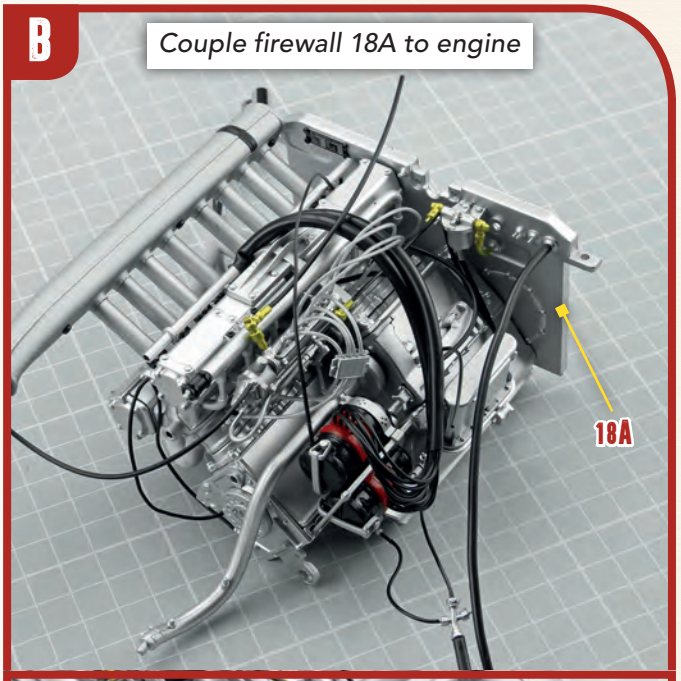

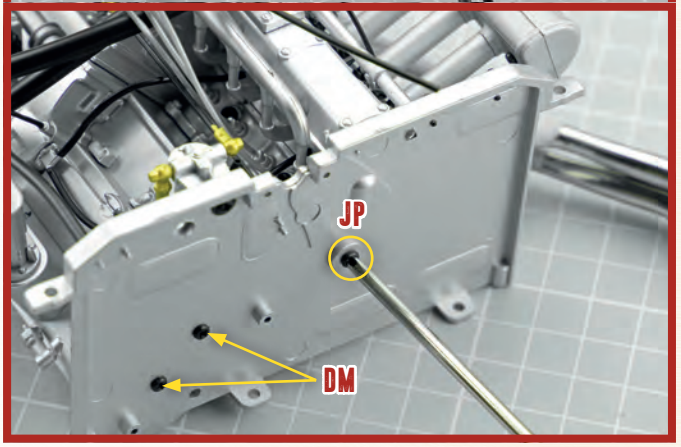

C

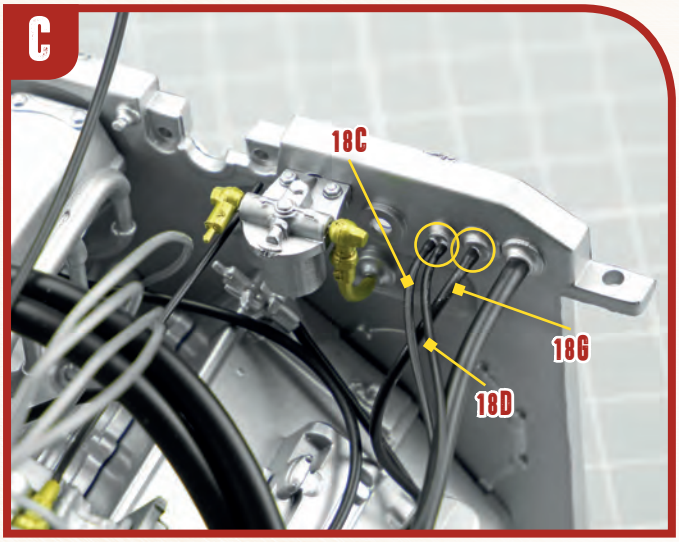

D

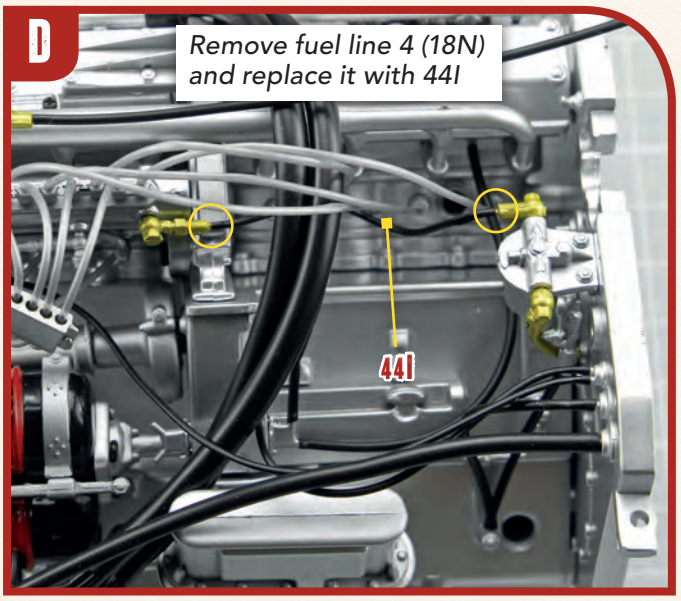
Remove fuel line 4 (18N)
and replace it with 44I
44I

E

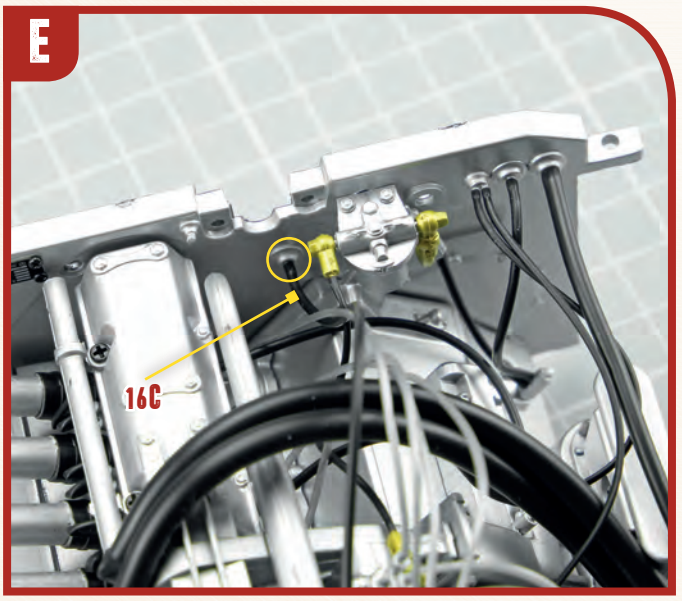
16C

F

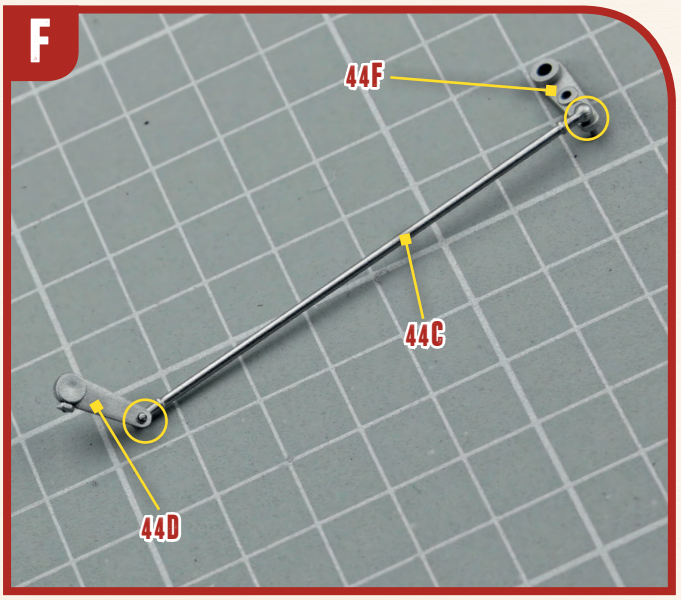
44F
44C
44D

G

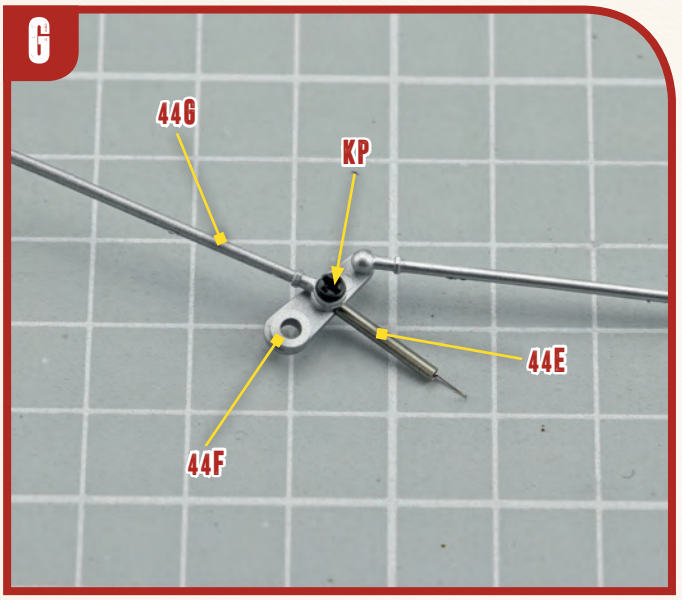
44G
KP
44E
44F

H

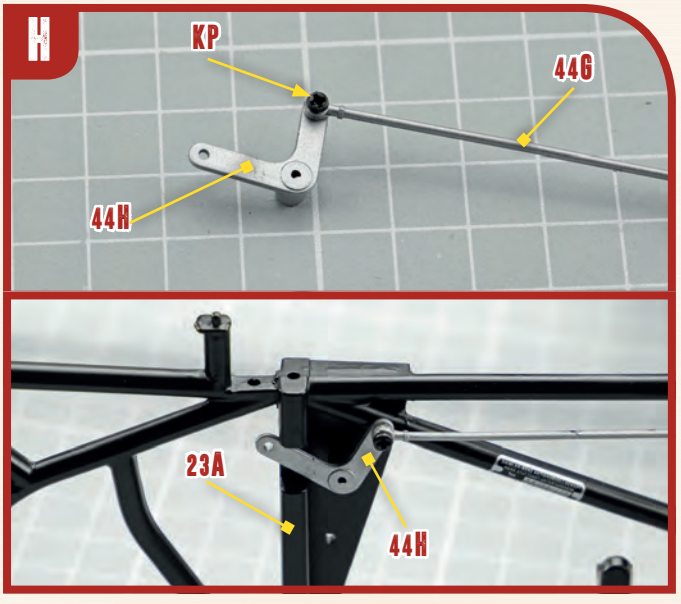
KP
44G
44H
23A
44H

I

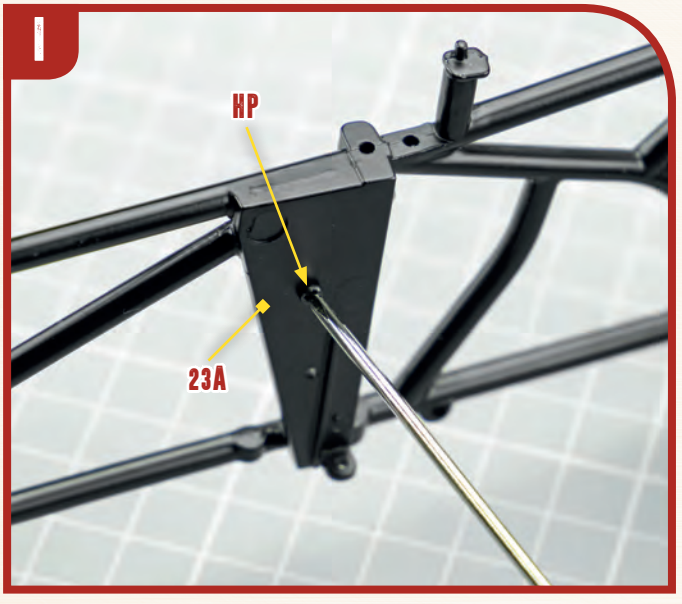
HP
23A

J

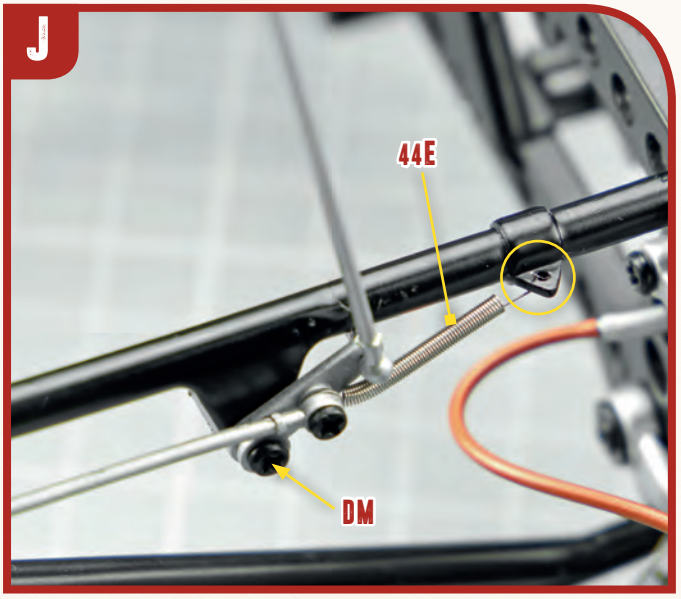
44E
DM

K

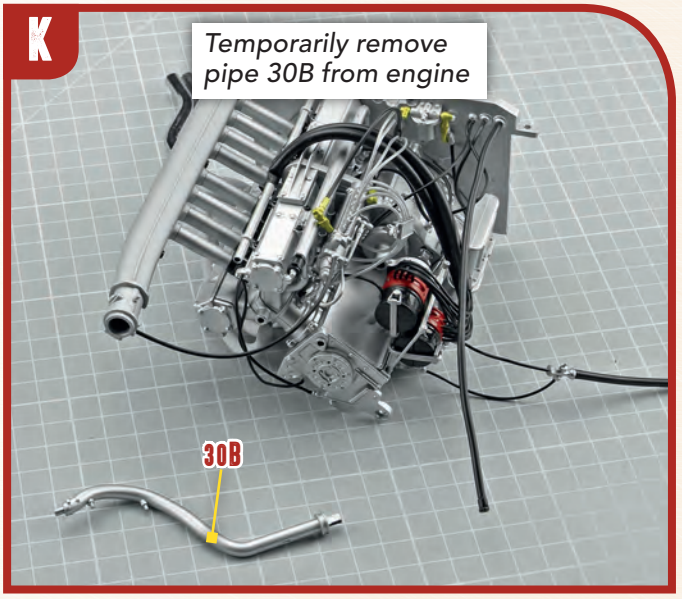
Temporarily remove pipe 30B from engine
30B

L

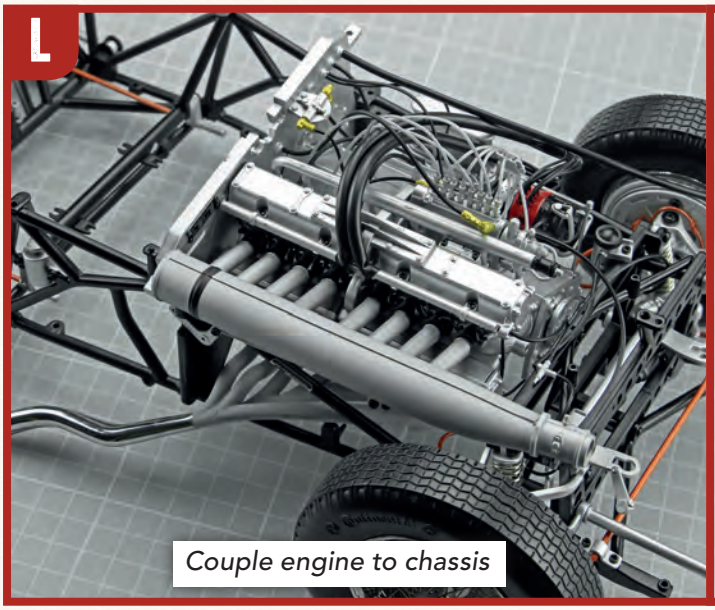
Couple engine to chassis

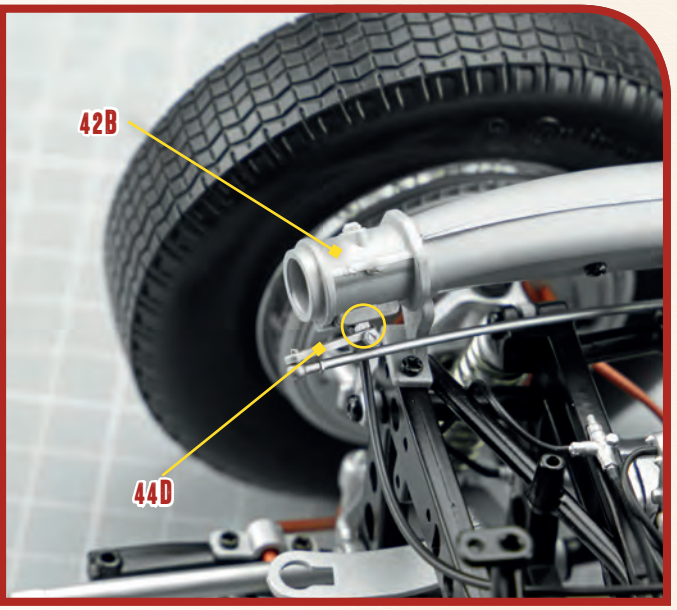
42B
44D

M

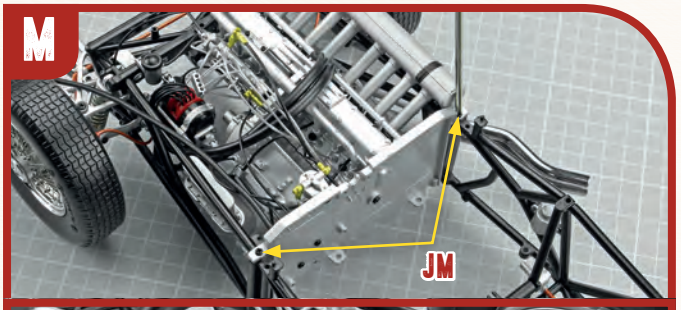
JM

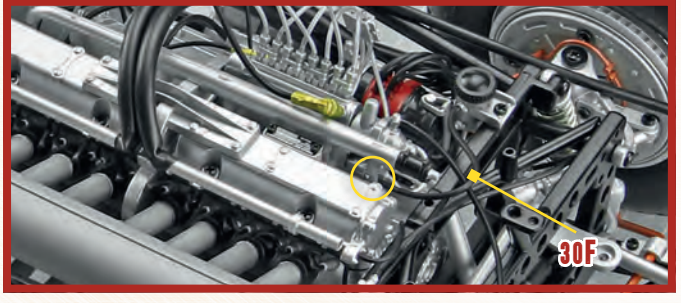
30F

N

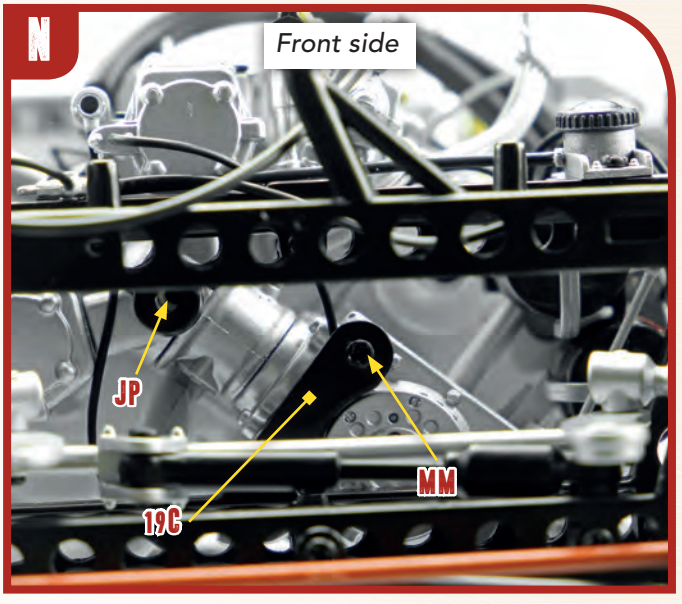
Front side
JP
MM
19C

O

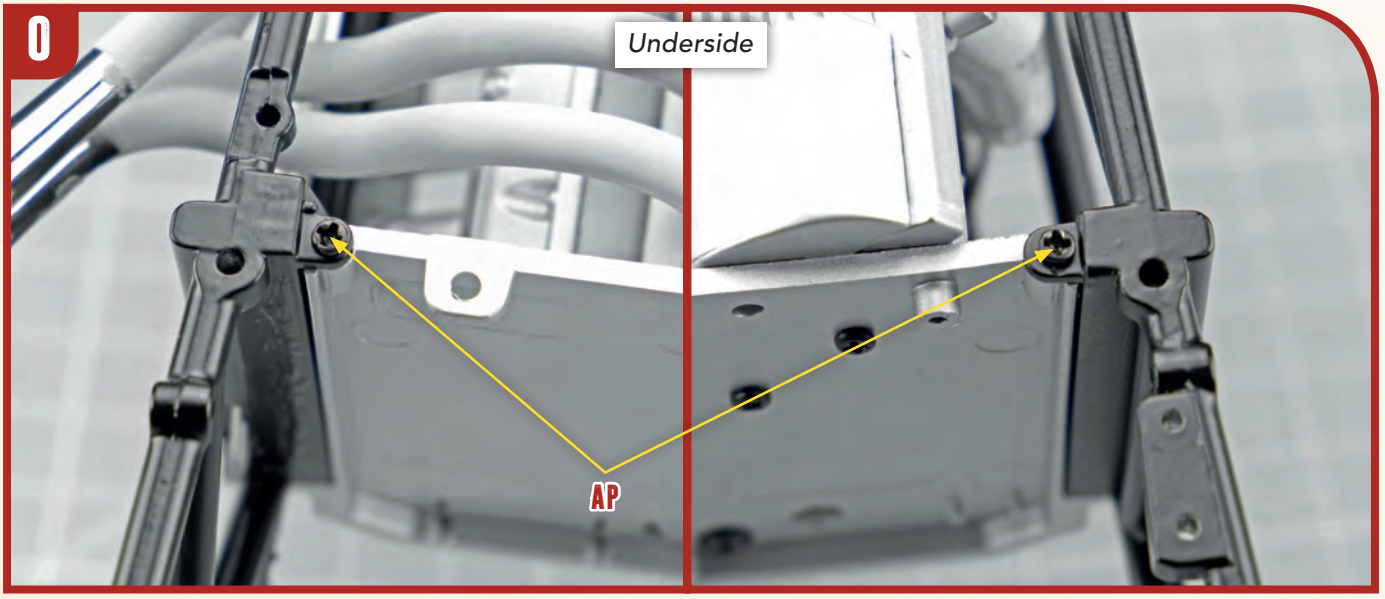

P

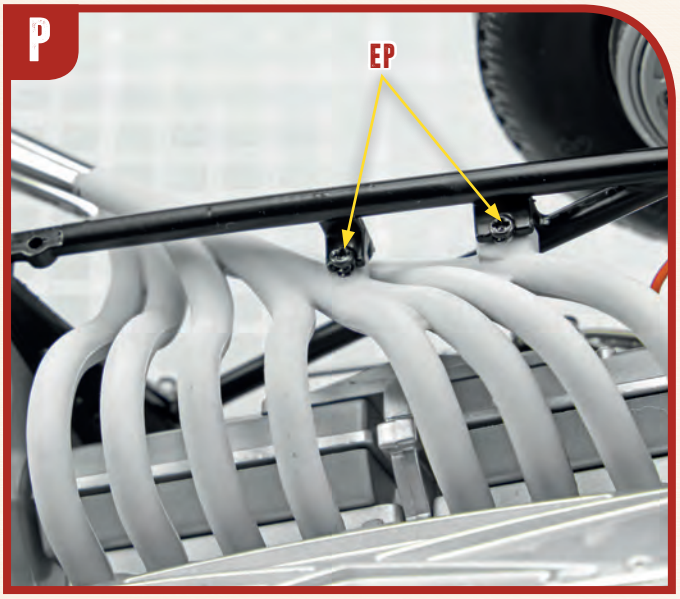

Q

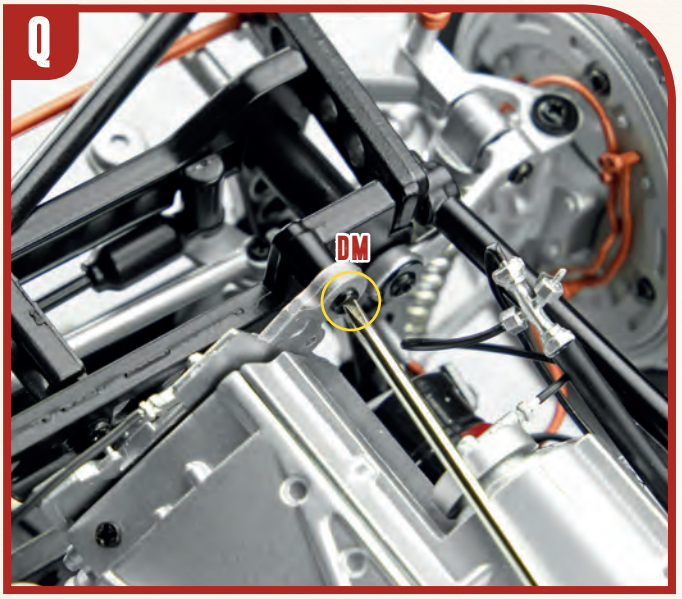

R

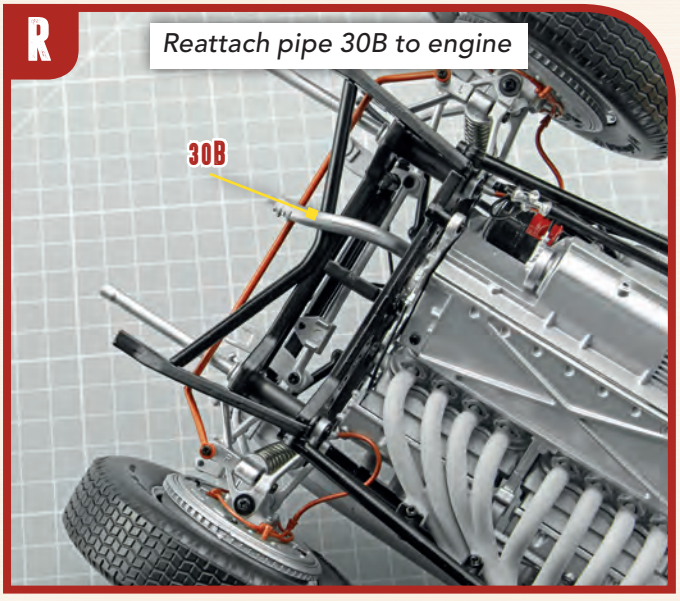

S

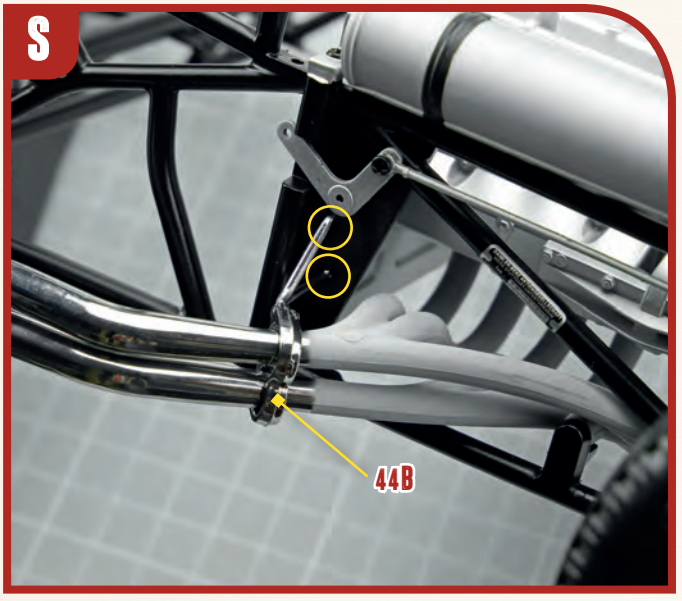

45 PARTS LIST



45A	Expansion tank part A
45B	Tube 1
45C	Cap
45D	Tube 2
45E	Tube 3
45F	Expansion tank part B
45G	Pipe 1
45H	Pipe 2
45I	Pipe 3
45J	Pipe 4
45K	Adhesive tape
AP	4 screws (1.7x4mm)
BM	3 screws (1.7x3mm)

A

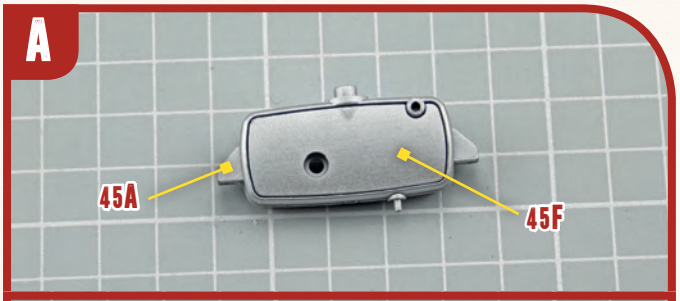

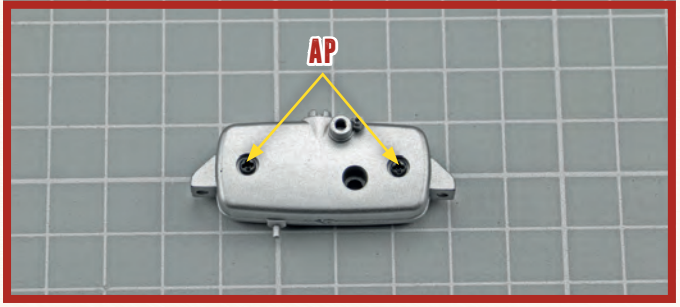

B

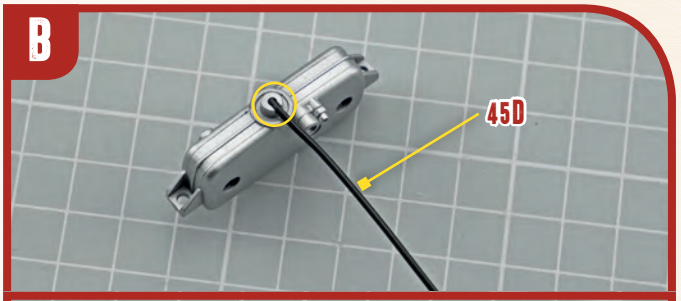

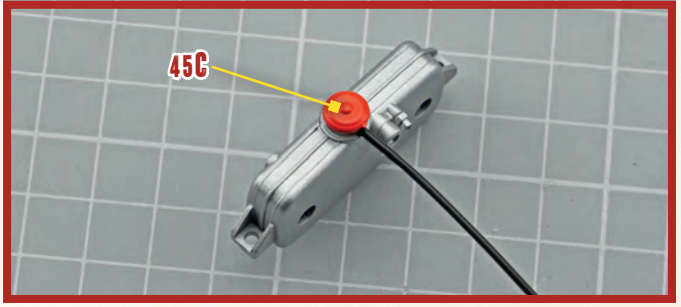

C

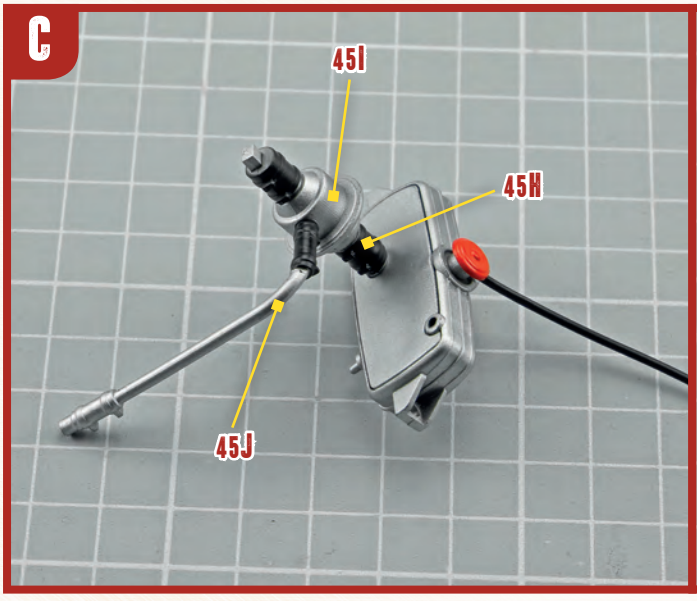

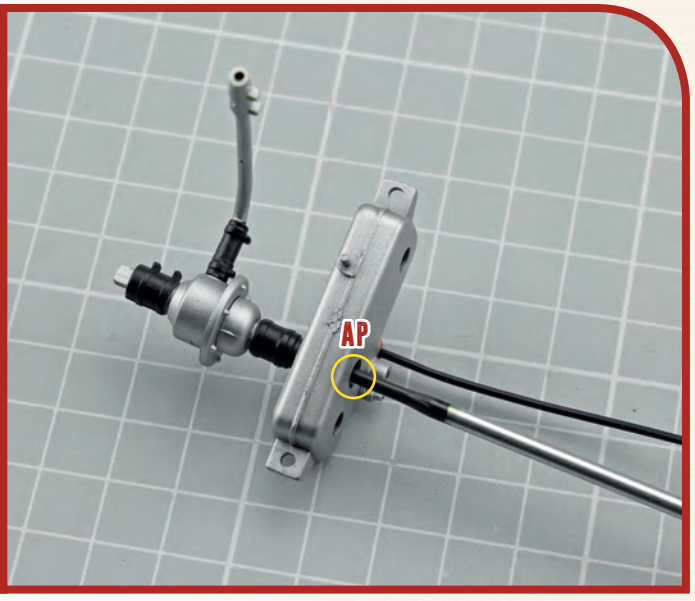

D

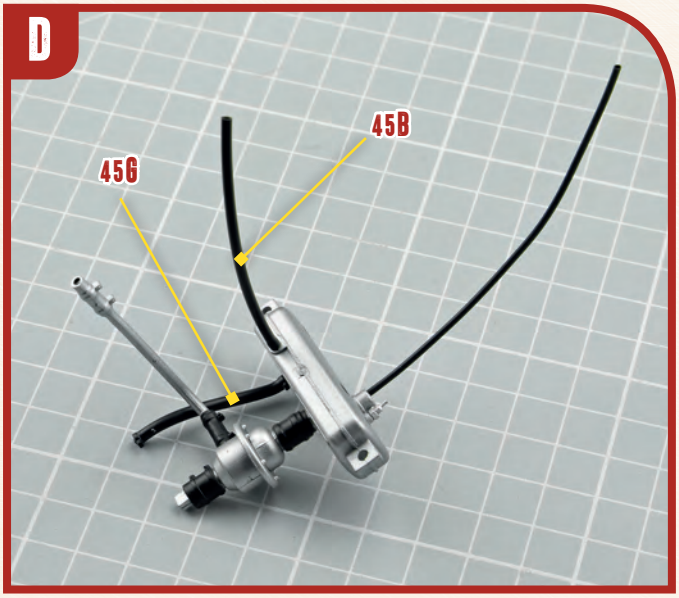
45G
45B

E

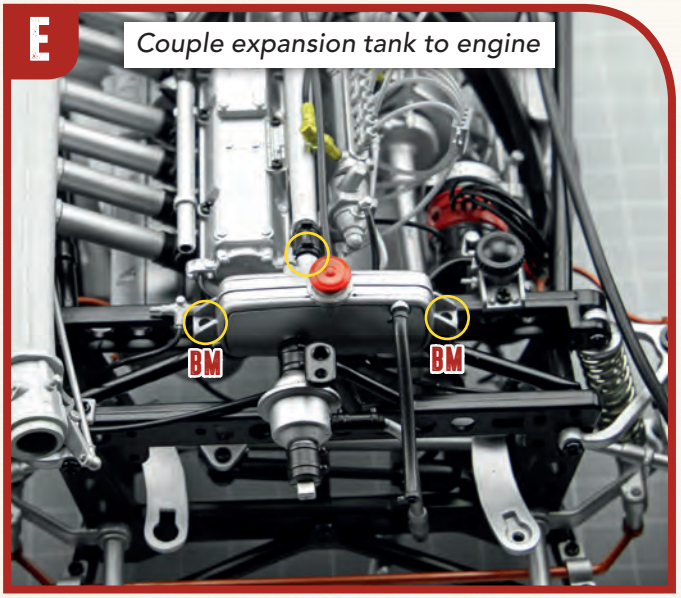
Couple expansion tank to engine
BM
BM

F

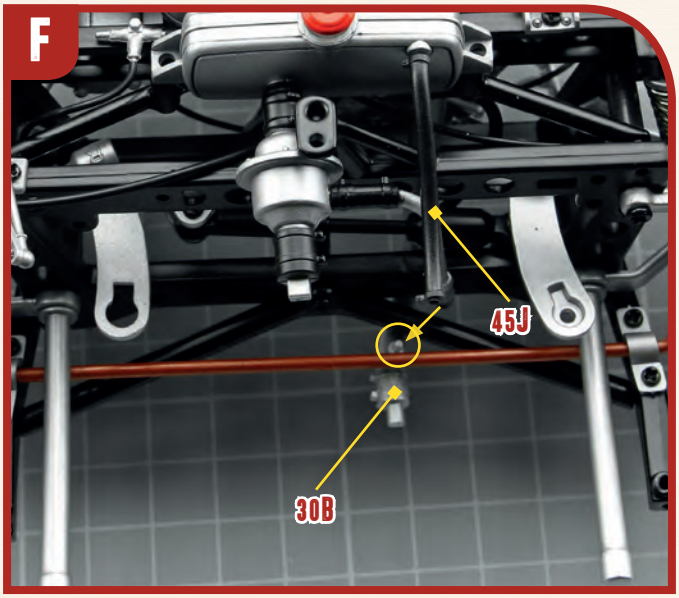
45J
30B

G

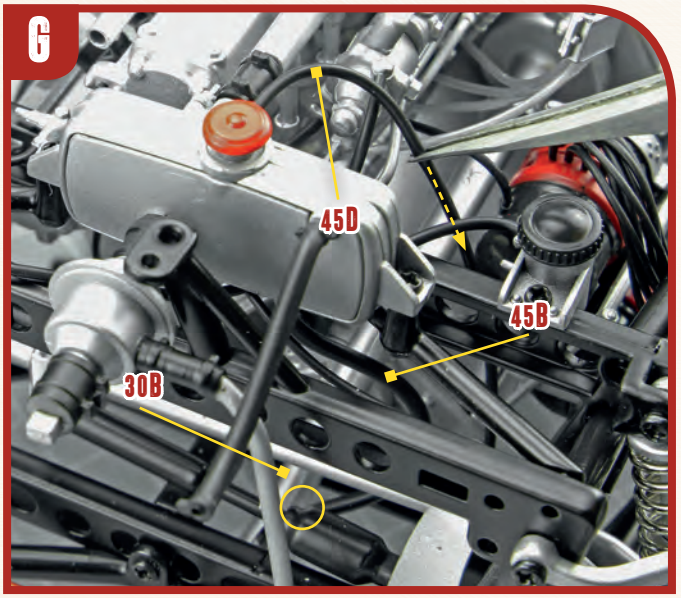
45D
45B
30B

H

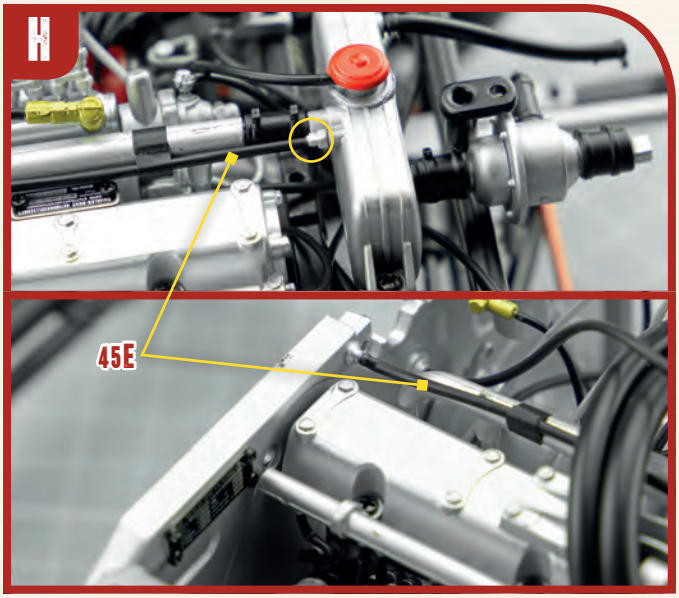
45E

I

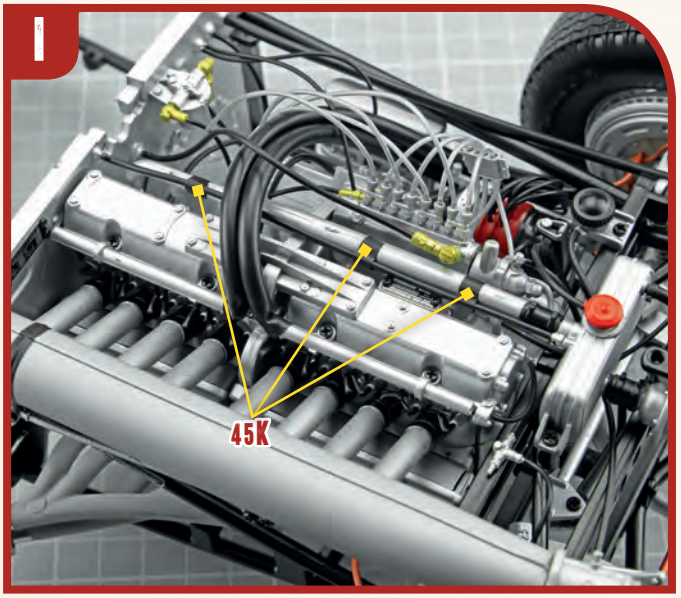
45K

46 PARTS LIST

REGULAR ASSEMBLY



46A Outer rim
46B Central ring 1
46C Inflation valve
46D Hub 1
46E Spokes 1
46F Spokes 2
46G Central ring 2
46H Double-sided tape
AP 5 screws (1.7x4mm)
CM 4 screws (1.7x4mm)

A

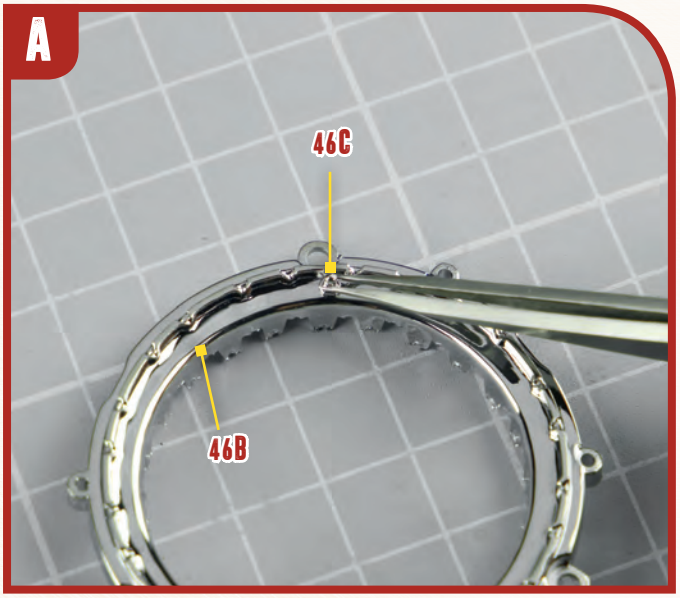

B

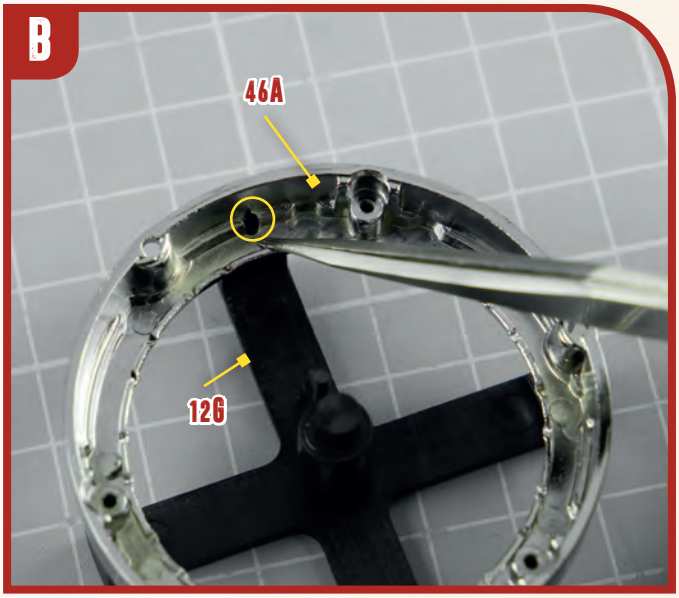

C

Apply 24 pieces of double-sided tape 46H to 46A's inner profile and tear off their top sheets.



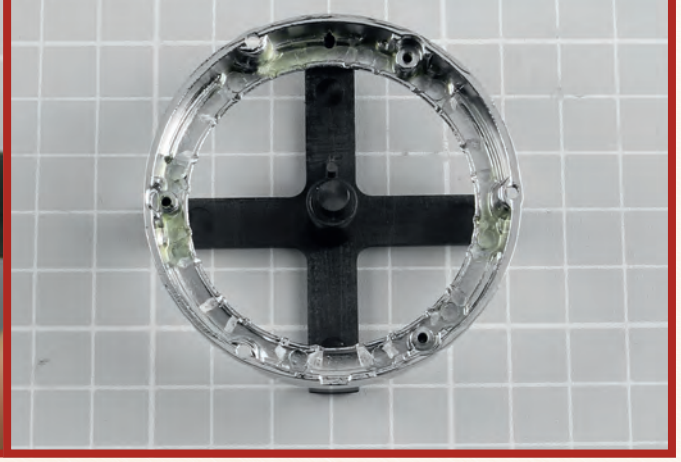

D

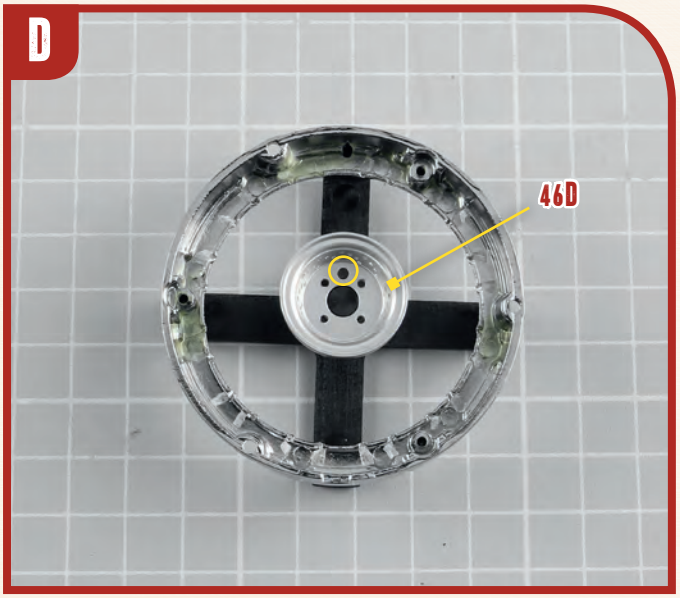

E

Insert 1 spoke 46F through a hole in 46D's first level (counting from the bottom).

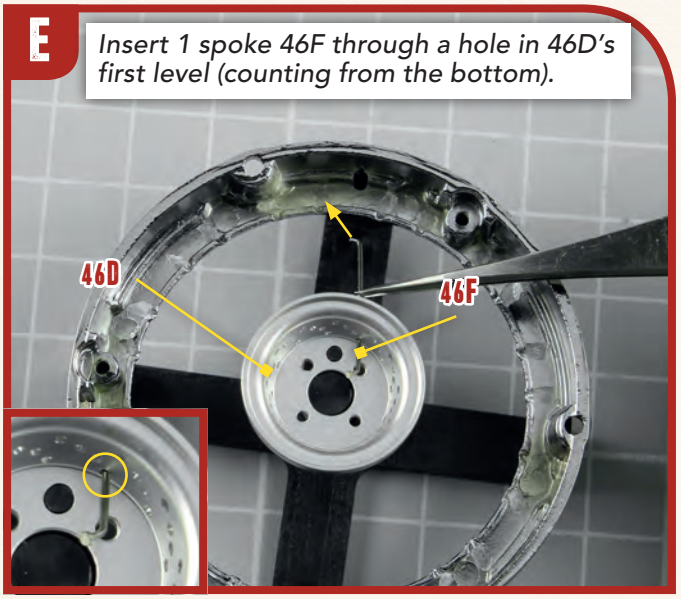

F

Repeat the process with other 11 spokes 46F.

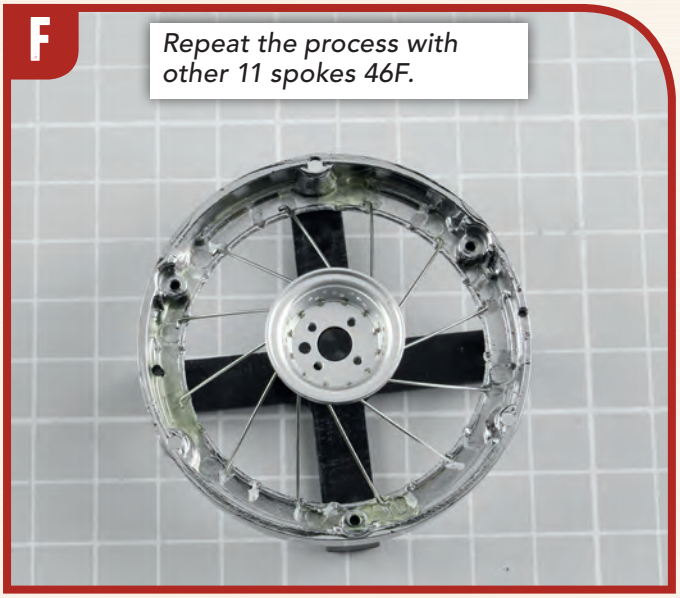

G

Insert 12 spokes 46F through 46D's third level of holes.

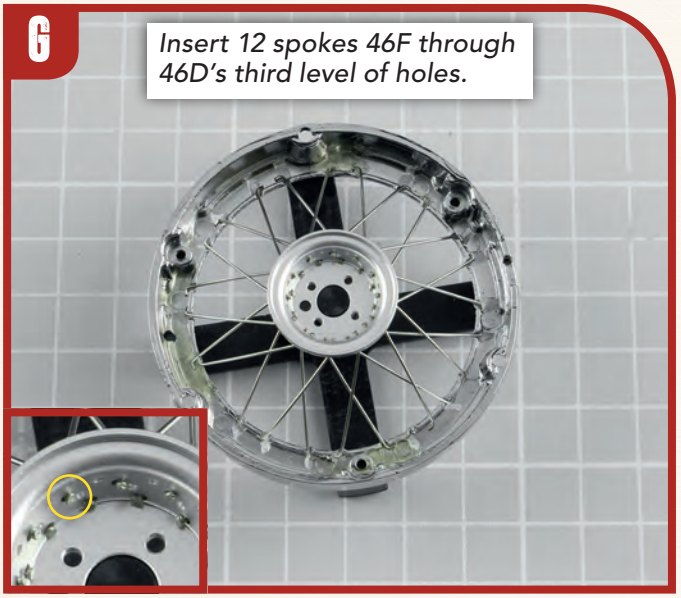

H

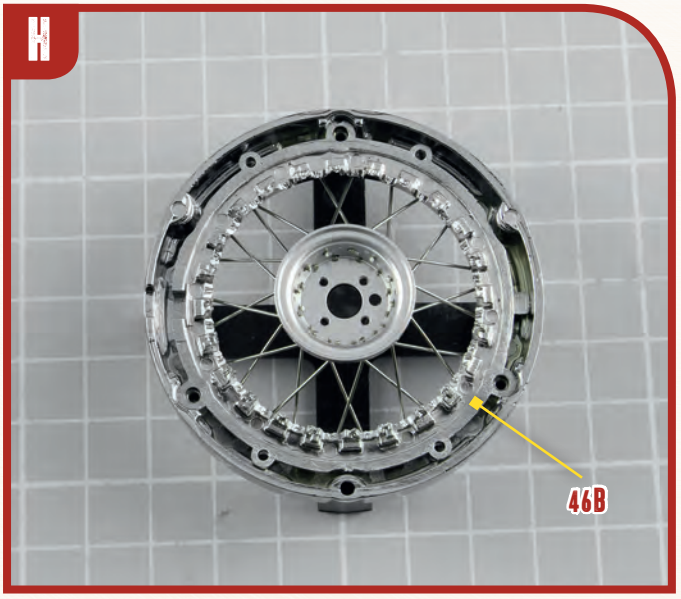

I

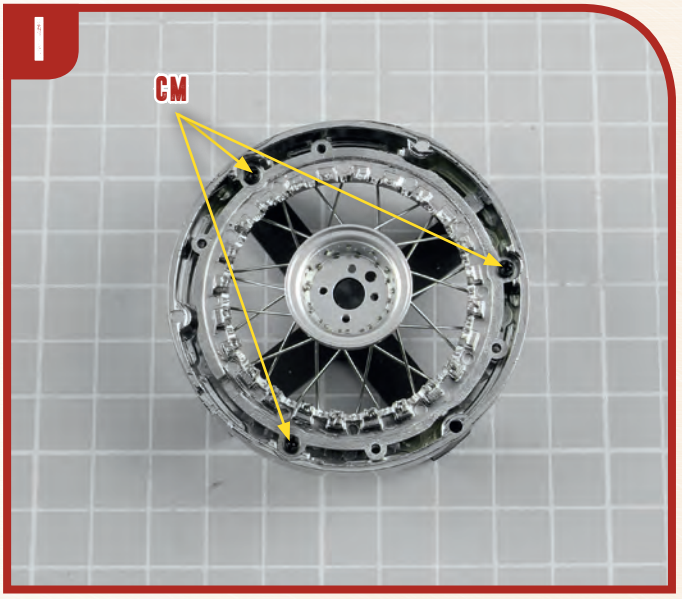

J

Insert 12 spokes 46E through 46D's second level of holes.



K

Insert 12 spokes 46E through 46D's fourth level of holes.

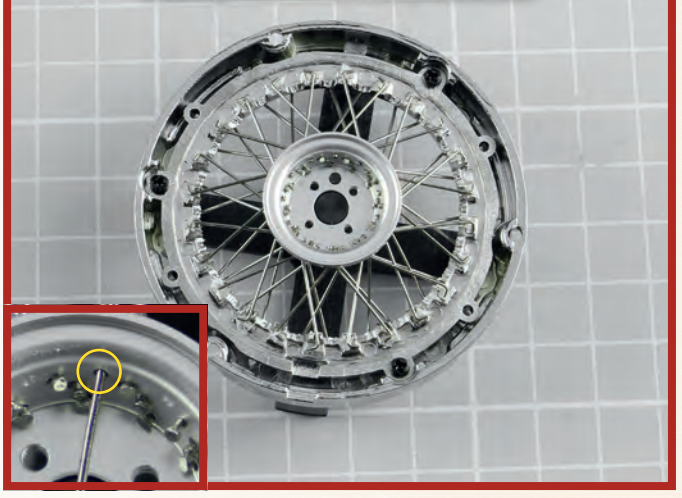

L

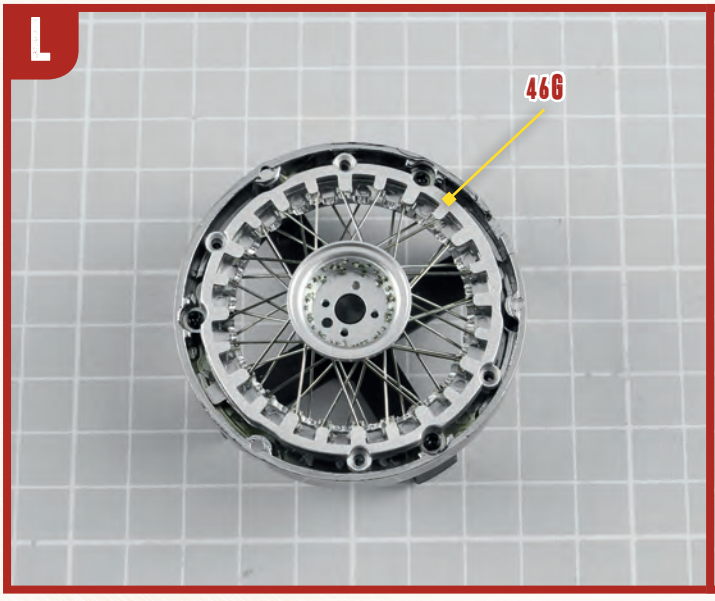

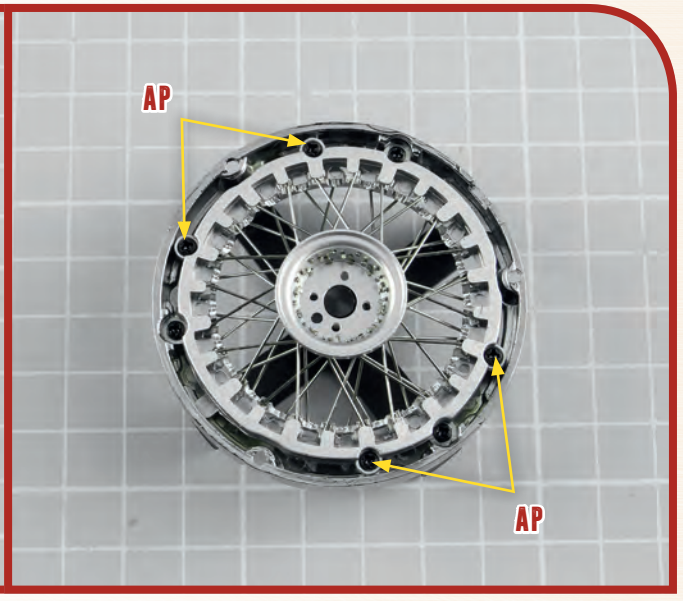

46B PARTS LIST

EASY ASSEMBLY



46AA	Central ring 1	**46GG**	Spokes 2
46BB	Hub 1		
46CC	Hub 2	**LP**	5 screws (1.5x3mm)
46DD	Hub 3	**TP**	4 screws (1.5x5mm)
46EE	Hub 4	**UP**	4 screws (1.7x4mm)
46FF	Spokes 1		

A

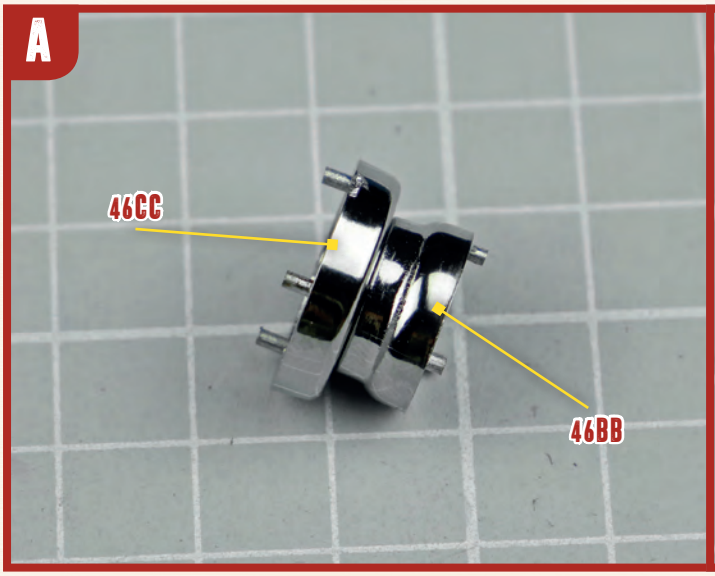

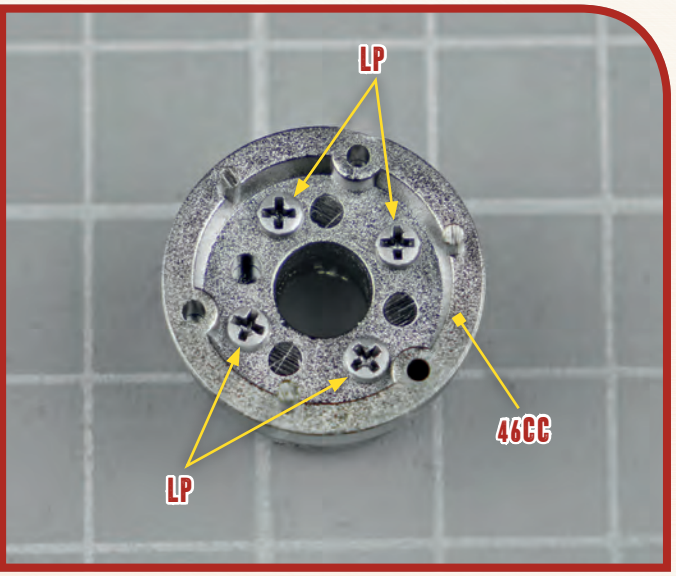

B

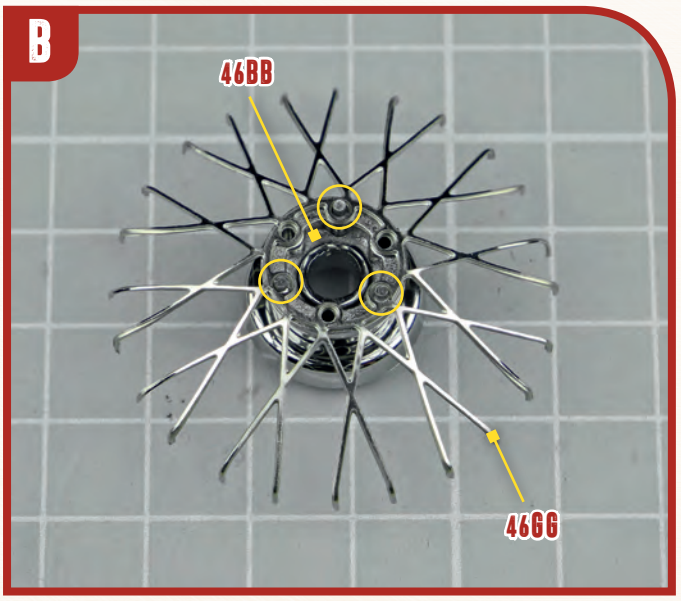

C

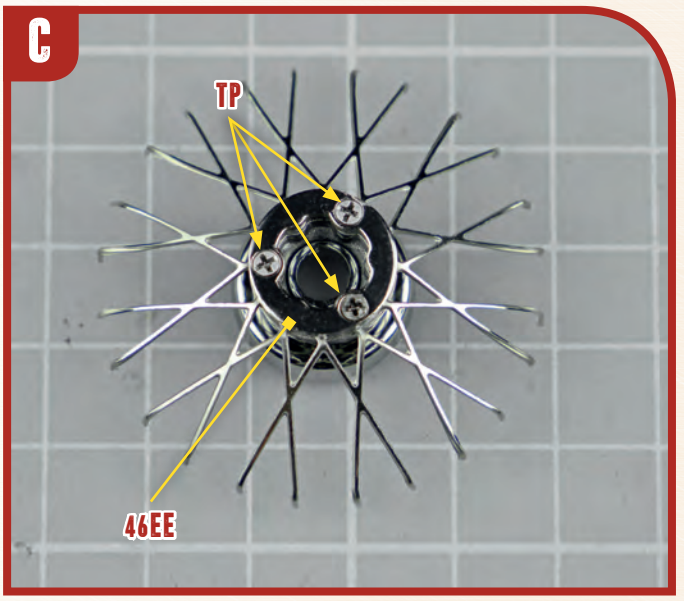

D

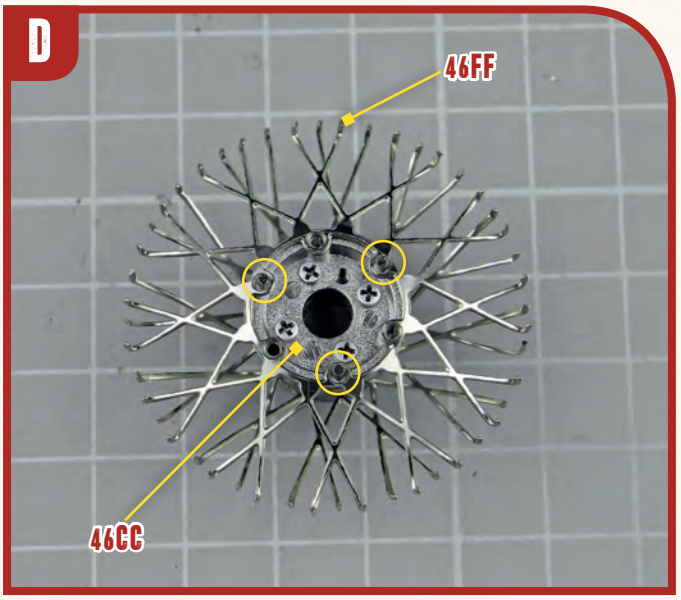

E

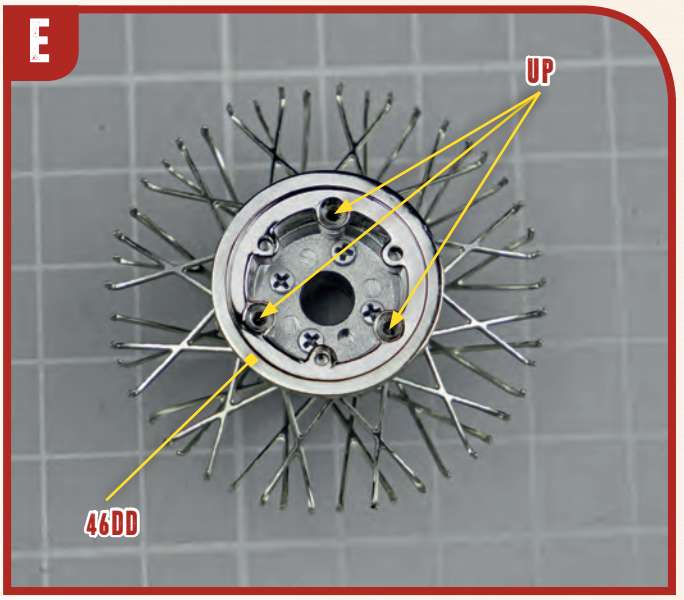

F

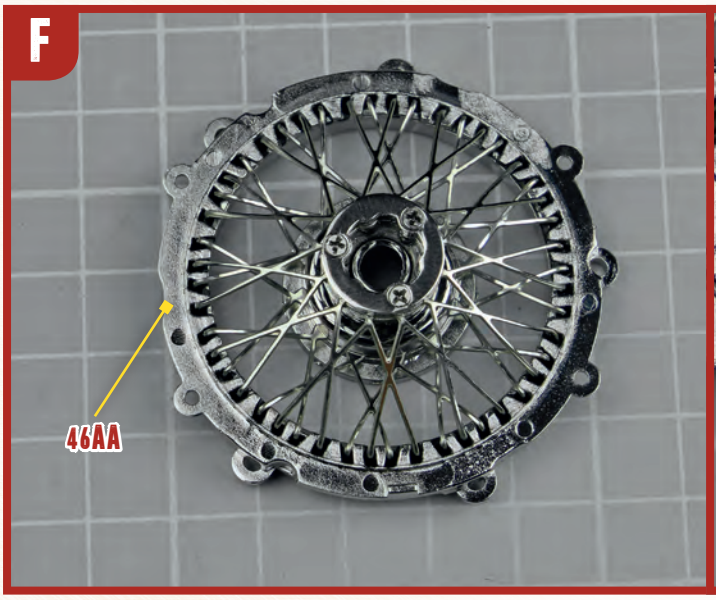

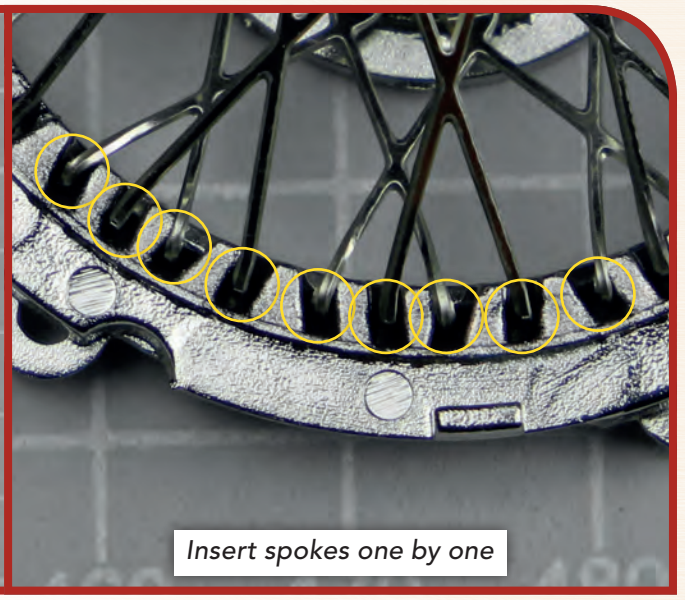

Insert spokes one by one

47 PARTS LIST

REGULAR ASSEMBLY



47A	Inner rim
47B	Central ring 3
47C	Hub 2
47D	Spokes 3
47E	Double-sided tape
CM	4 screws (1.7x4mm)
KM	5 screws (1.5x5mm)

A

Apply 24 pieces of double-sided tape 47E to 46B's inner profile and tear off their top sheets.

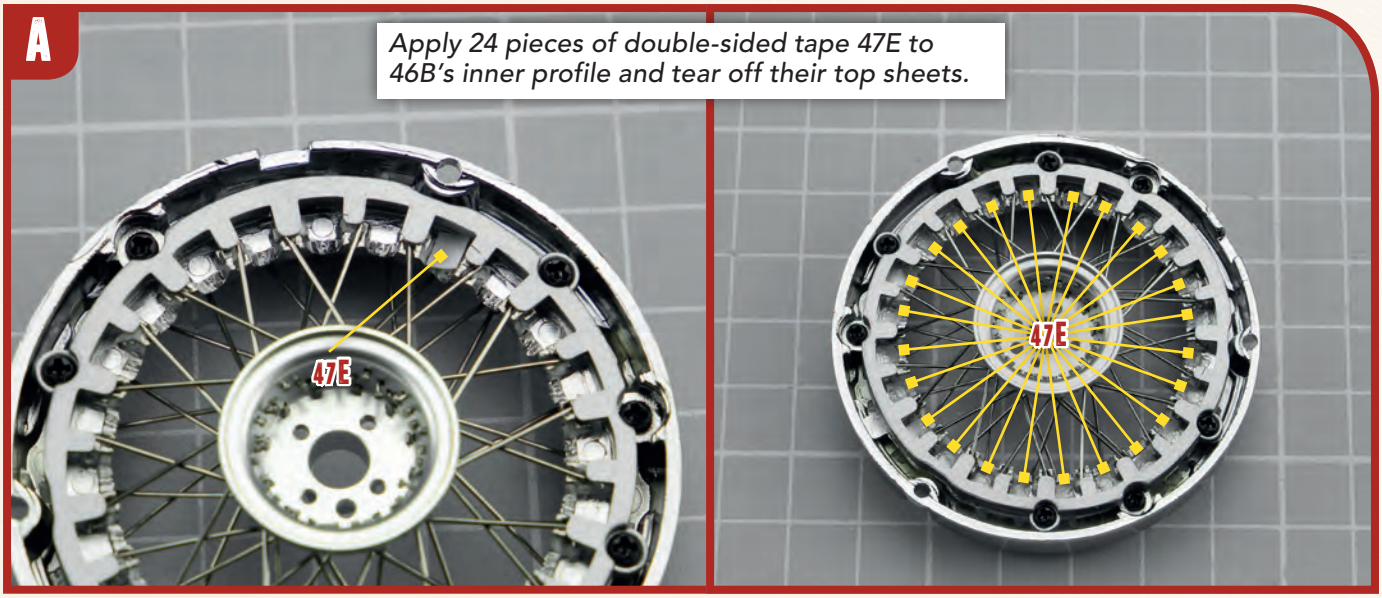

B

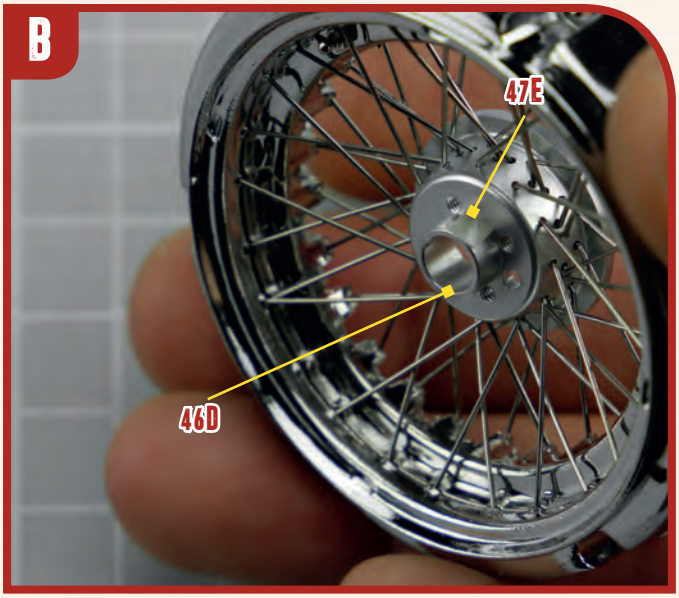

C



D

Insert 1 spoke 47D through a hole in 47C's first level (counting from the bottom). Place its thinner end as shown, on tape 47E.

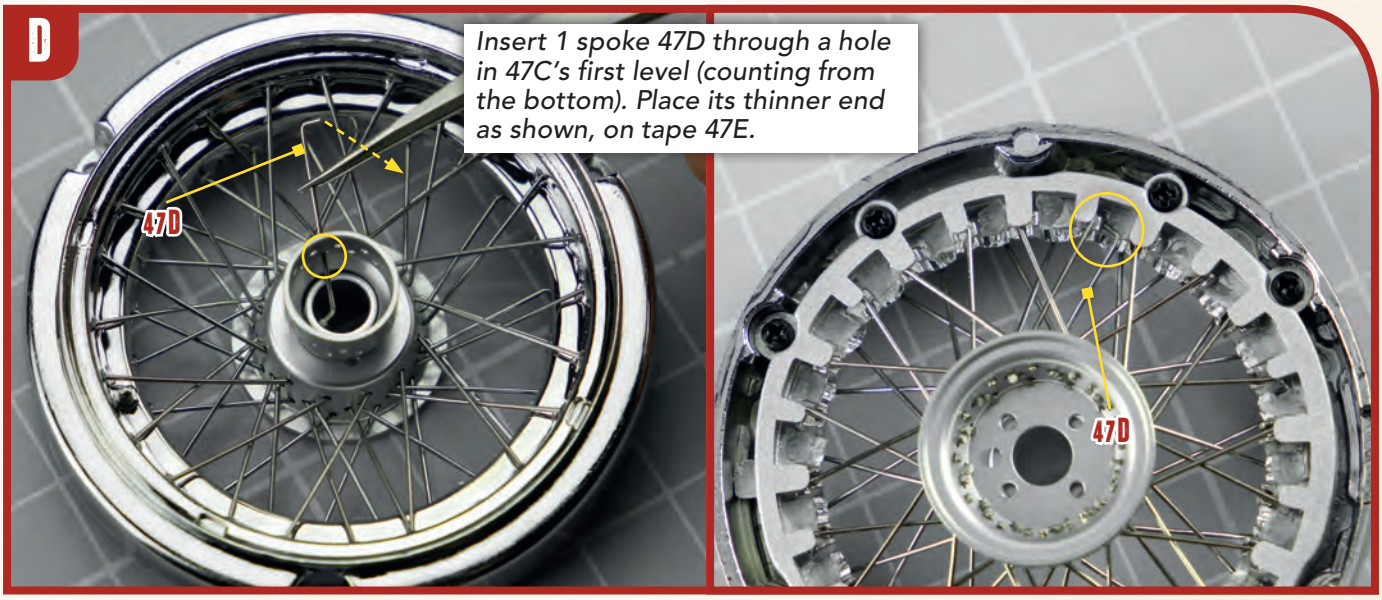

E

Repeat the process with other 11 spokes 47D. Leave one empty spot between the thinner ends of spokes 47D.



F

Insert 12 spokes 47D through 47C's second level of holes. Place their thinner ends on the empty spots from Step E, on tapes 47E.

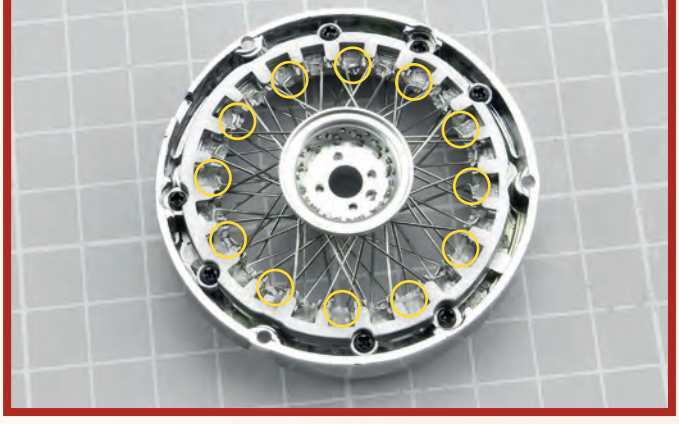

G

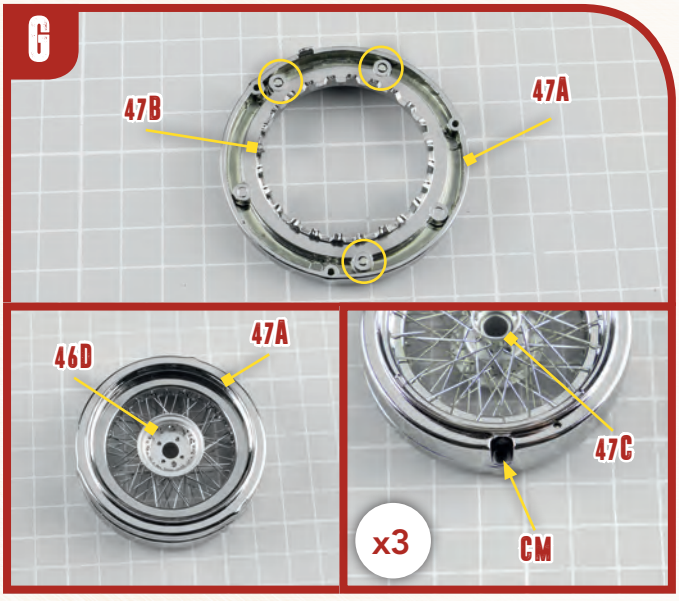

H

Tighten or loosen the four KM screws to adjust the position of the spokes.

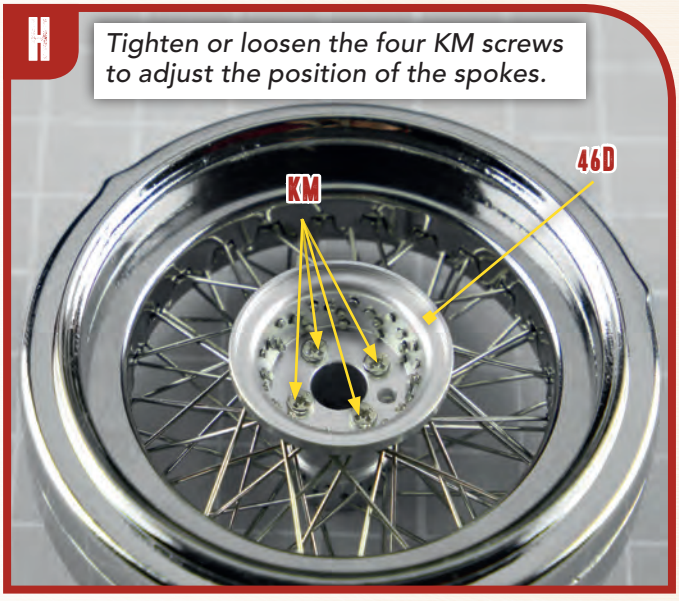

47B PARTS LIST



EASY ASSEMBLY

47AA Outer rim
47BB Inner rim
47CC Central ring 2
47DD Inflation valve

AP 5 screws (1.7x4mm)
CM 8 screws (1.7x4mm)

A

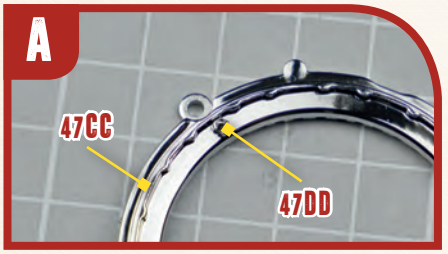

B

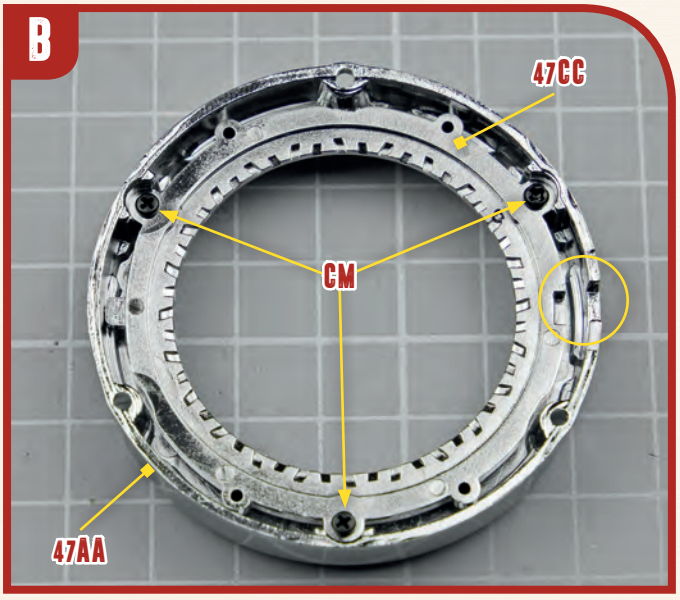

C

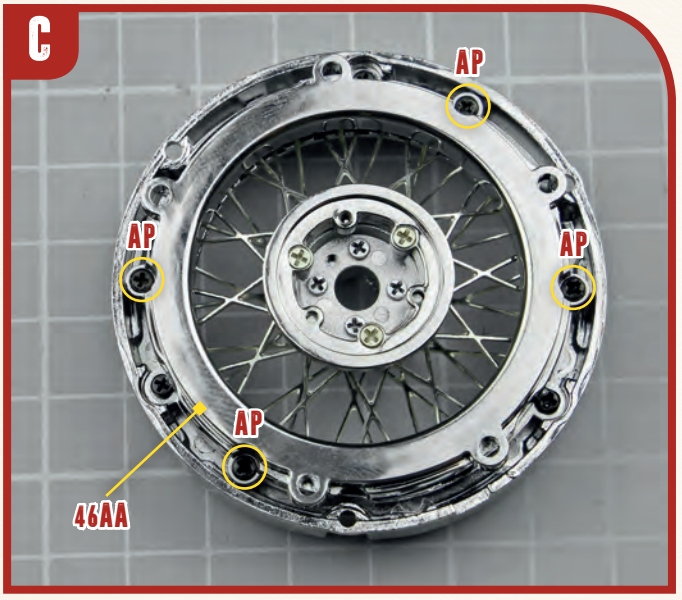

D



E

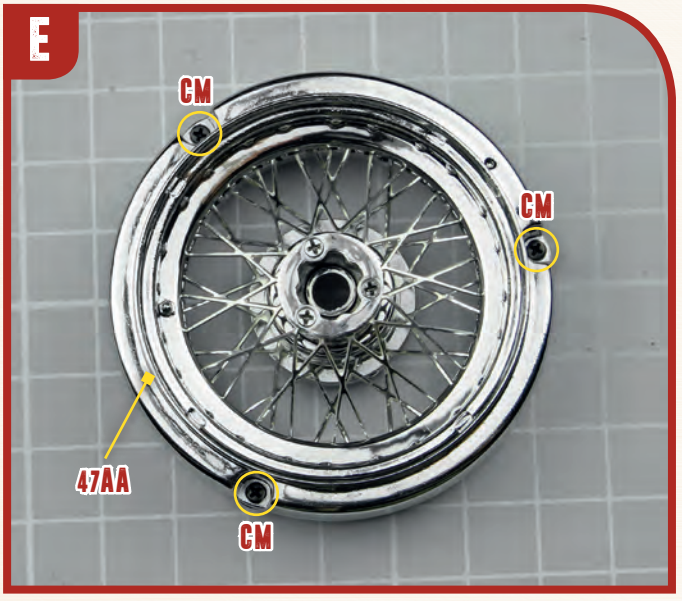

48 PARTS LIST

REGULAR ASSEMBLY



48A	Tyre
48B	Hub 3
48C	Hubcap
48D	Washer ring
JM	2 screws (2x5mm)

A

Soften tyre 48A by placing it in a bowl full of hot water.

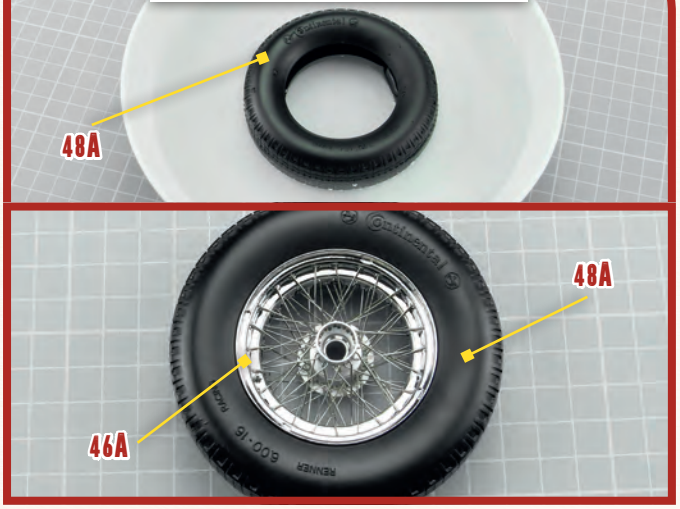

B

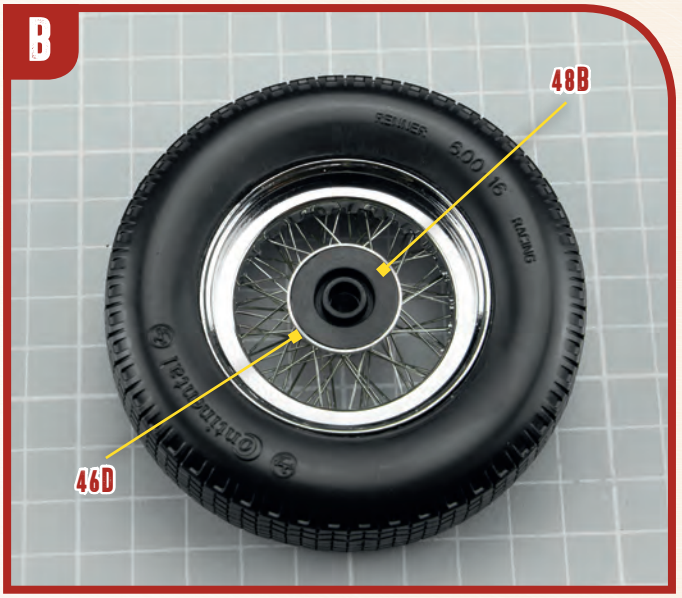

C



Attach wheel to rear suspension left wishbone 27A

D



48B PARTS LIST



48AA Tyre
48BB Hubcap
48CC Hub 5
48DD Washer ring

JM 2 screws (2x5mm)

A



Soften tyre 48AA by placing it in a bowl full of hot water.

B

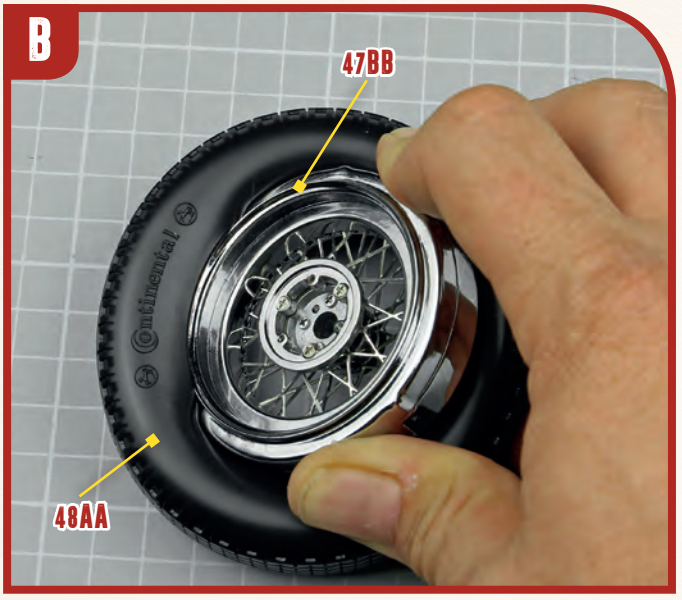

C

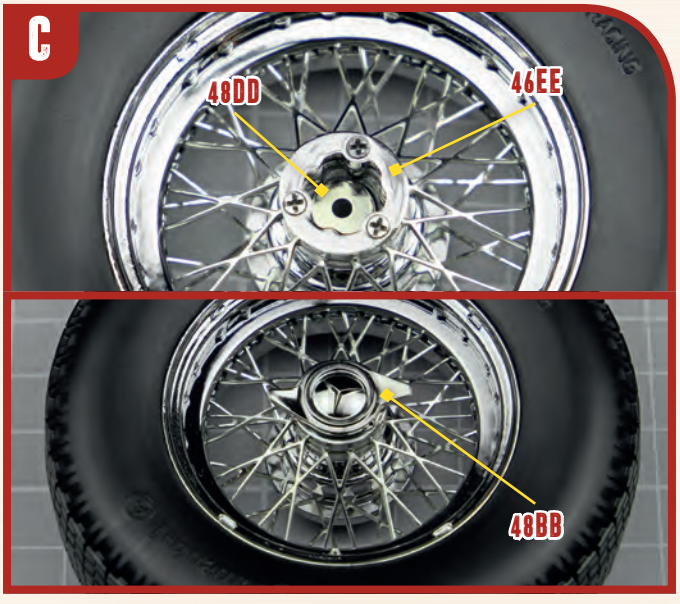

D

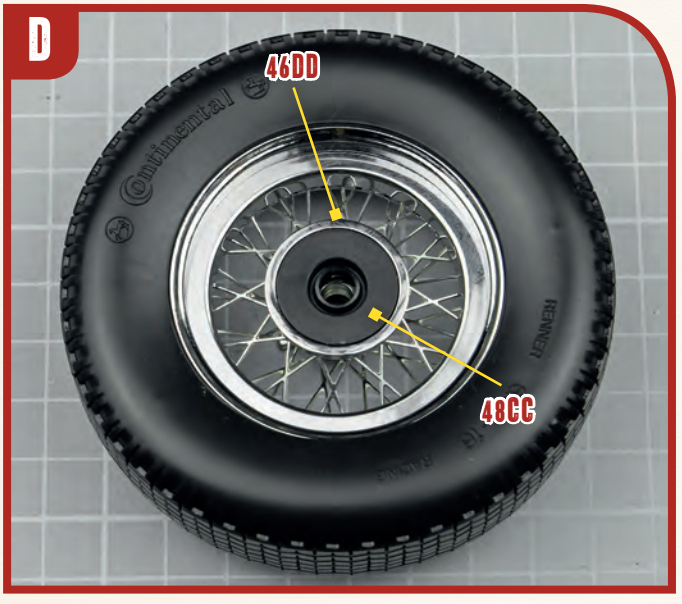

49 PARTS LIST

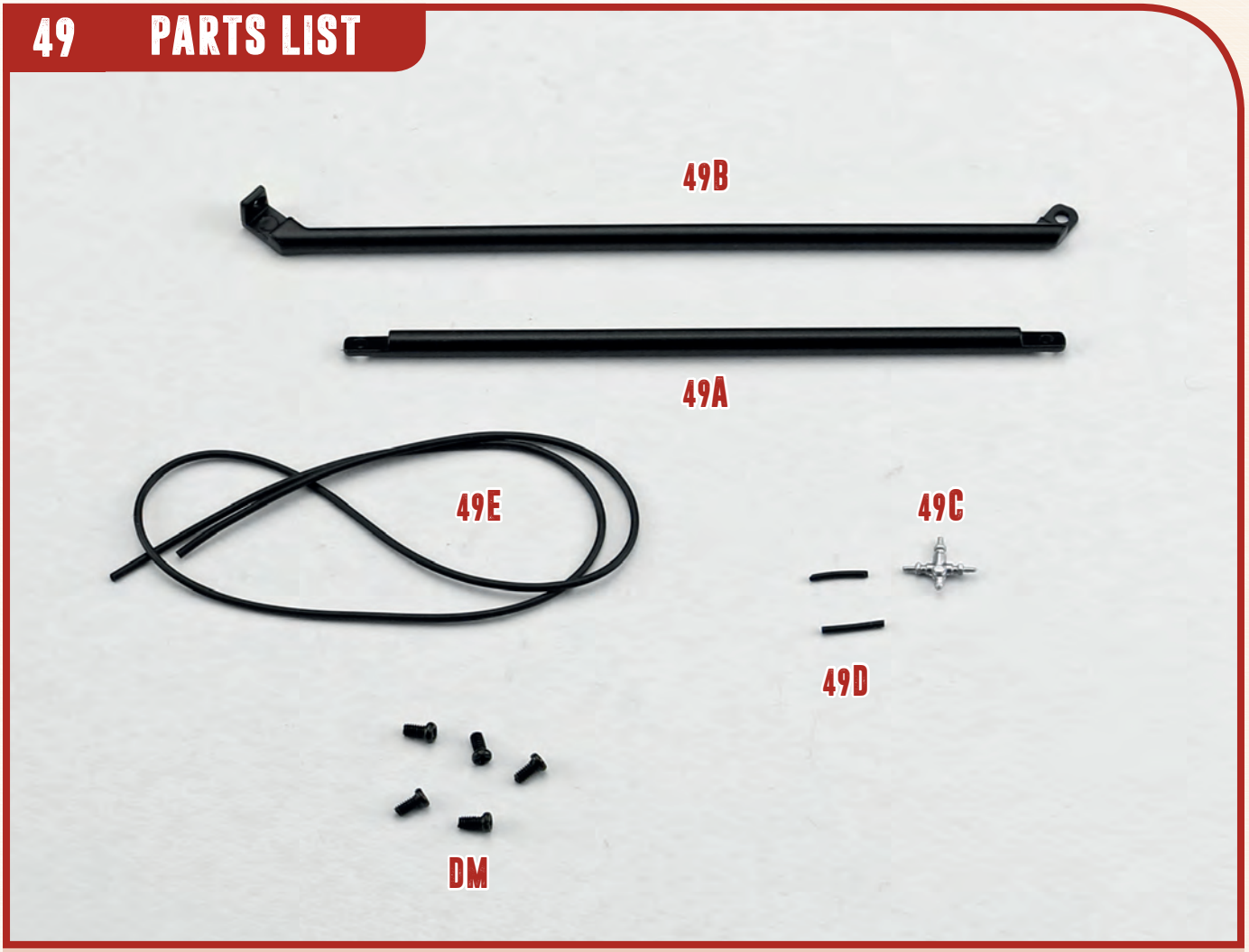

49A Front chassis upper rod
49B Front chassis lower rod
49C Rear brakes distributor
49D Tubes (x2)
49E Rear brakes line
DM 5 screws (2x4mm)

A

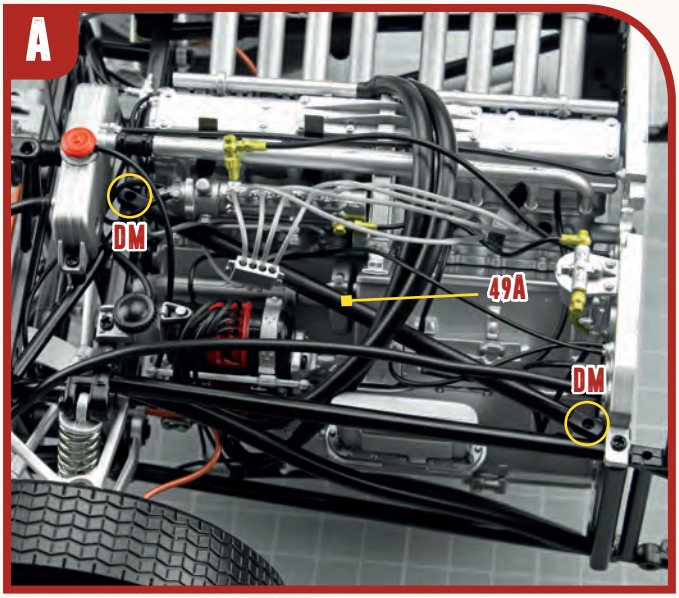

B

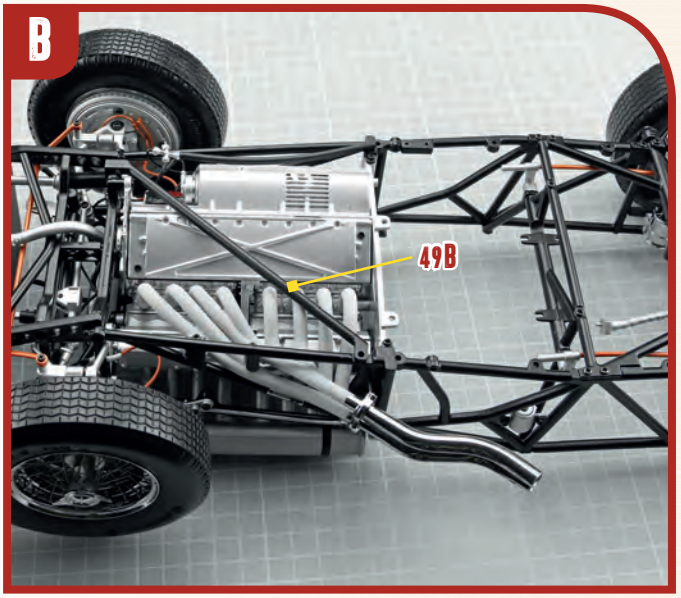

C

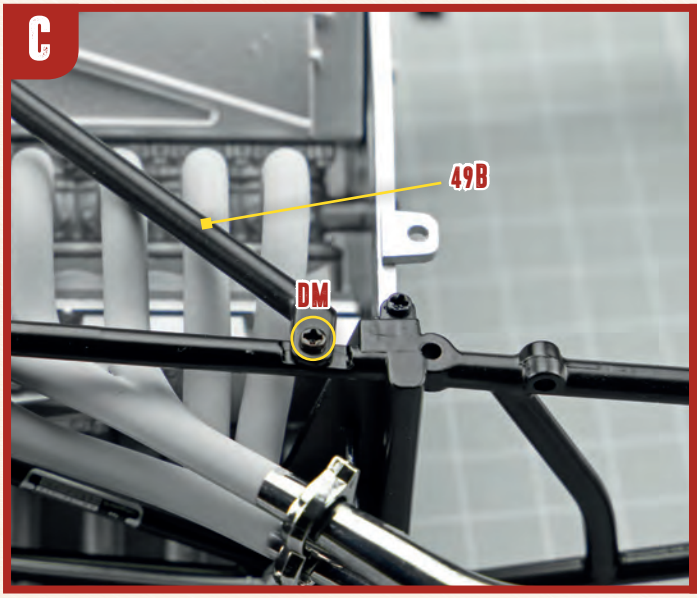

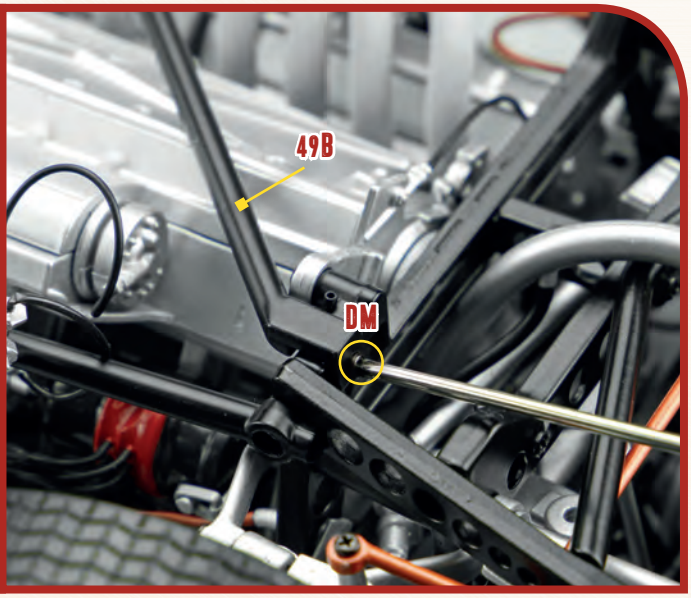

D

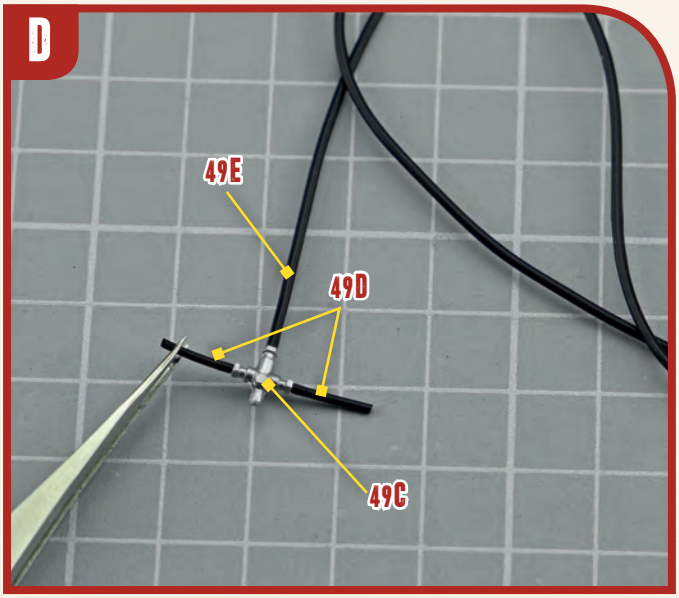

E

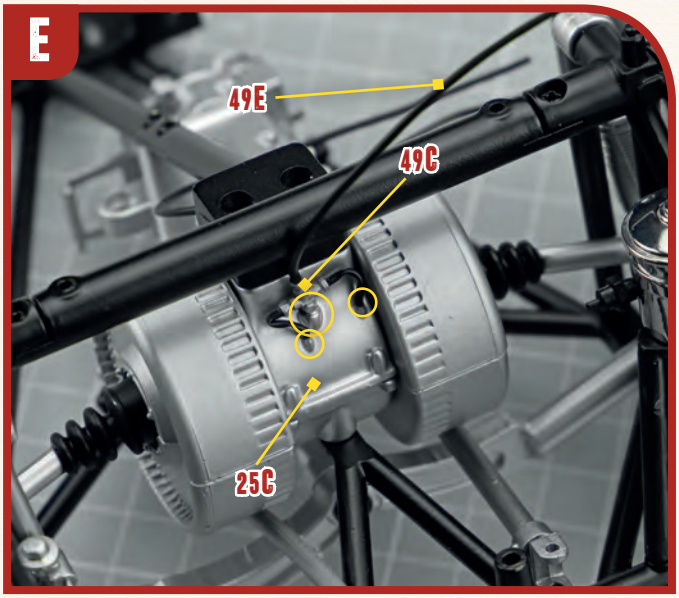

F

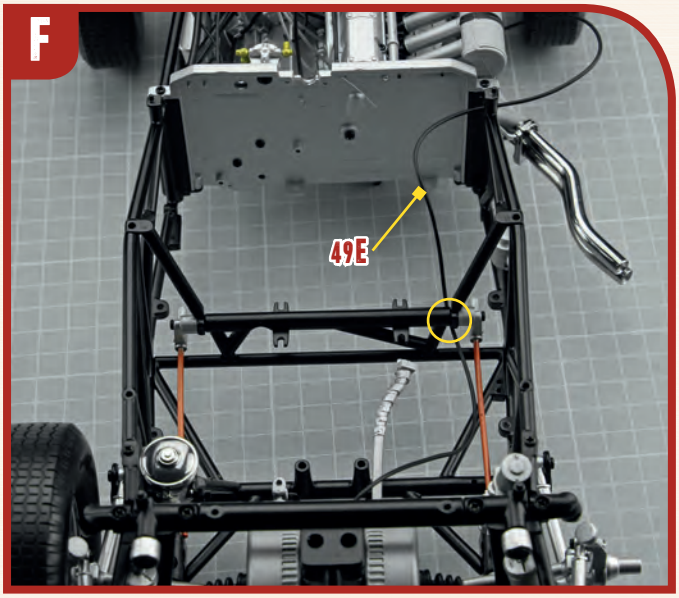

G

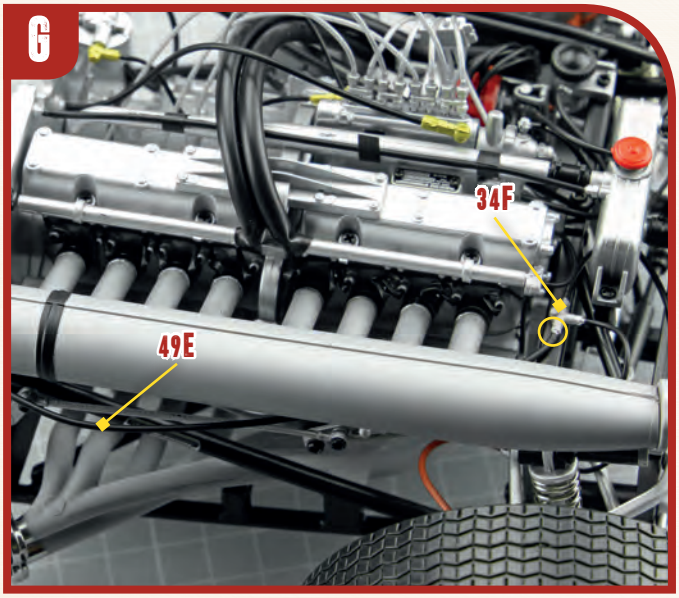

50 PARTS LIST

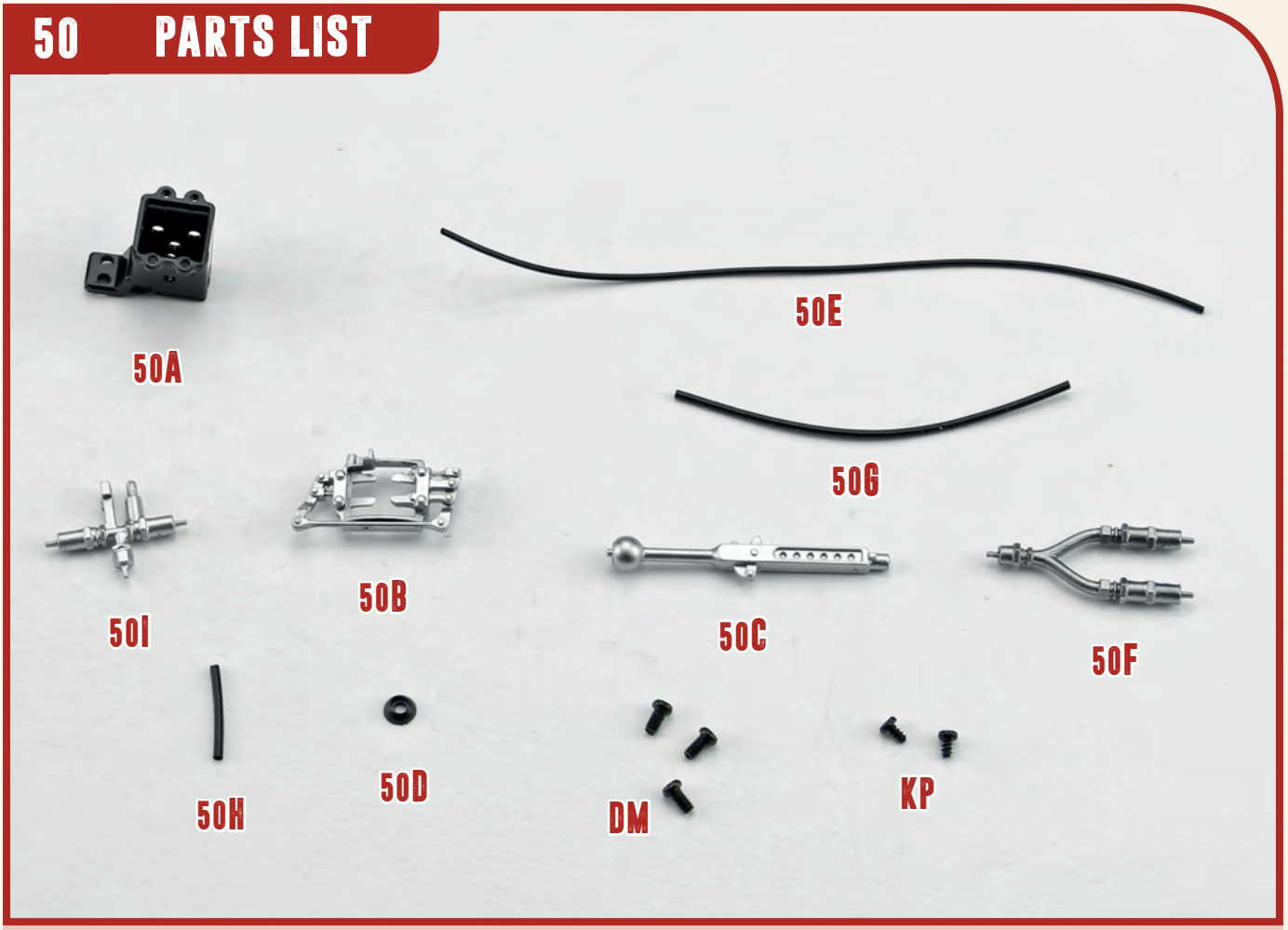

50A Gear lever base
50B Gear lever support
50C Gear lever
50D Washer ring
50E Tube 1
50F Y-shaped pipe
50G Tube 2
50H Tube 3
50I Pipe
KP 2 screws (1.7x3mm)
DM 3 screws (2x4mm)

A

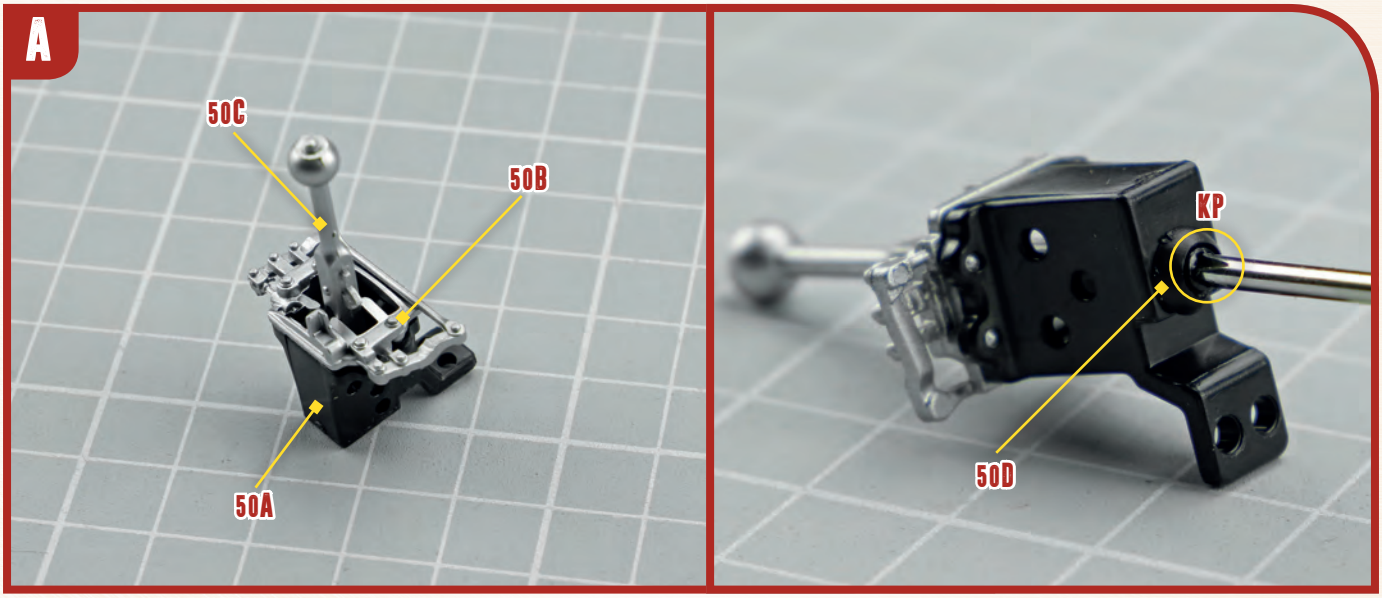

B

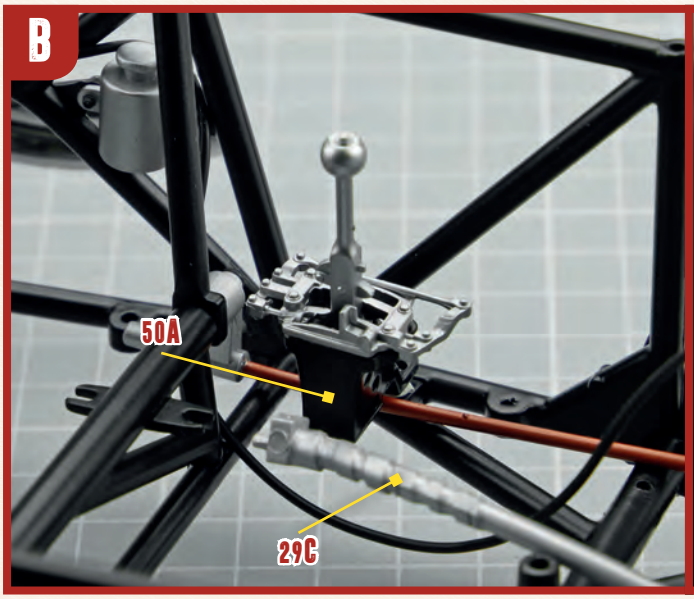

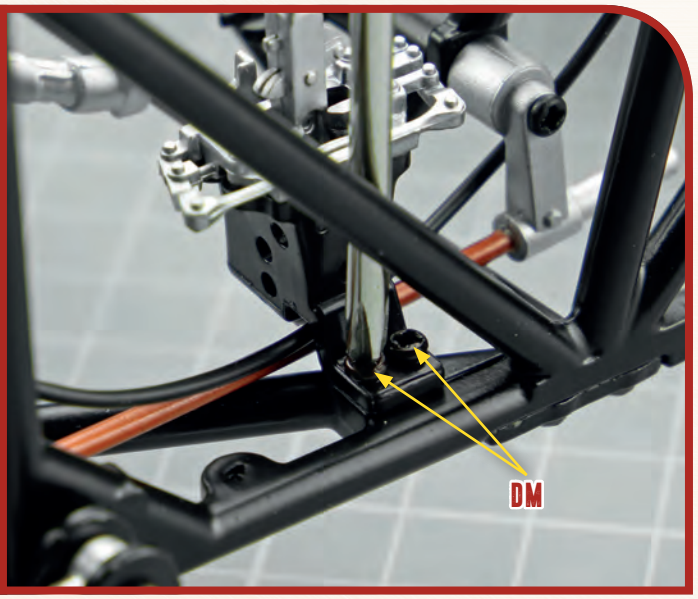

C

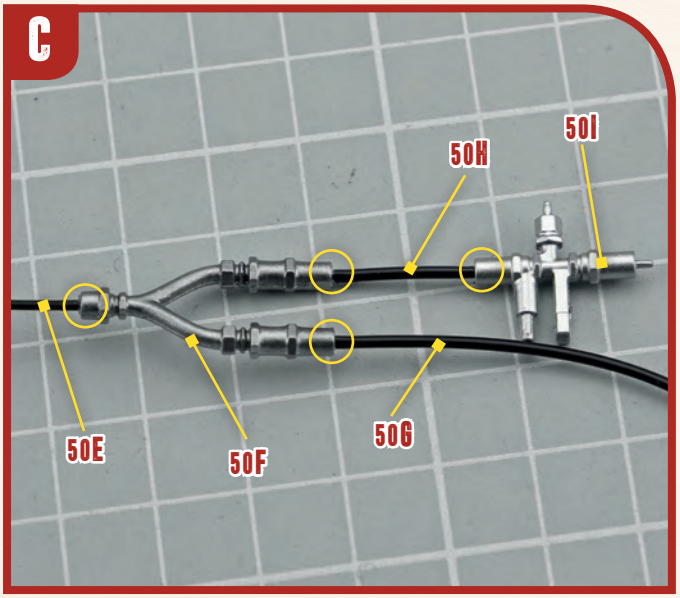

D

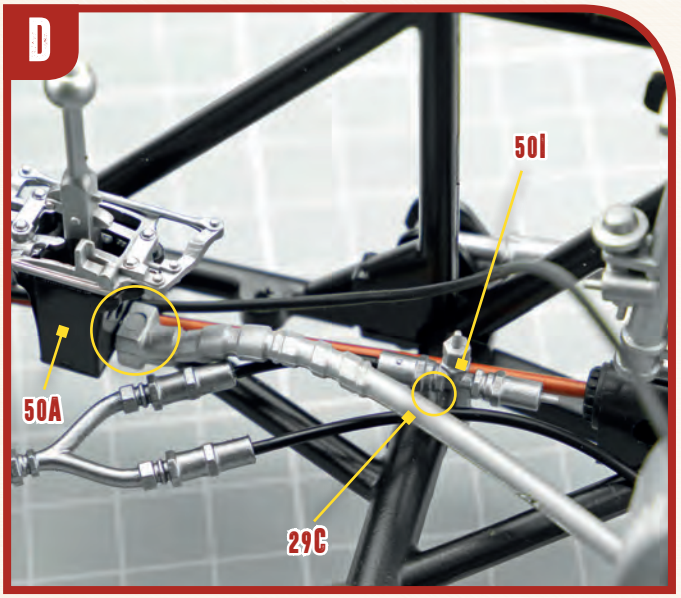

E

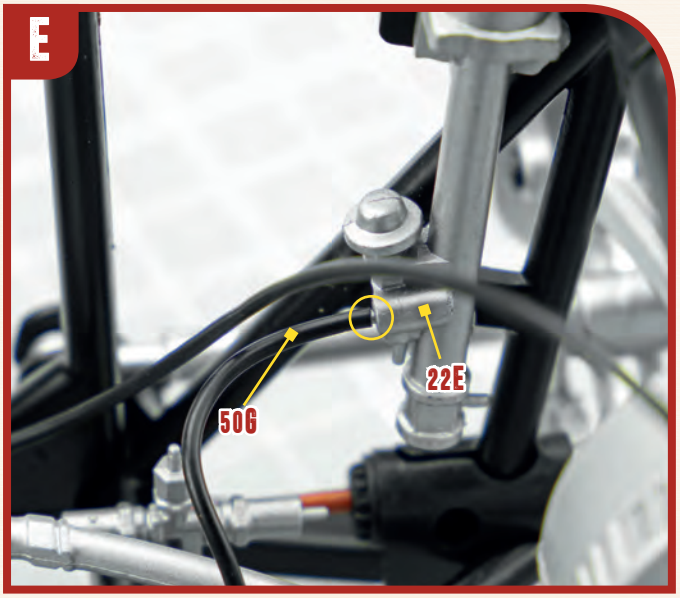

F

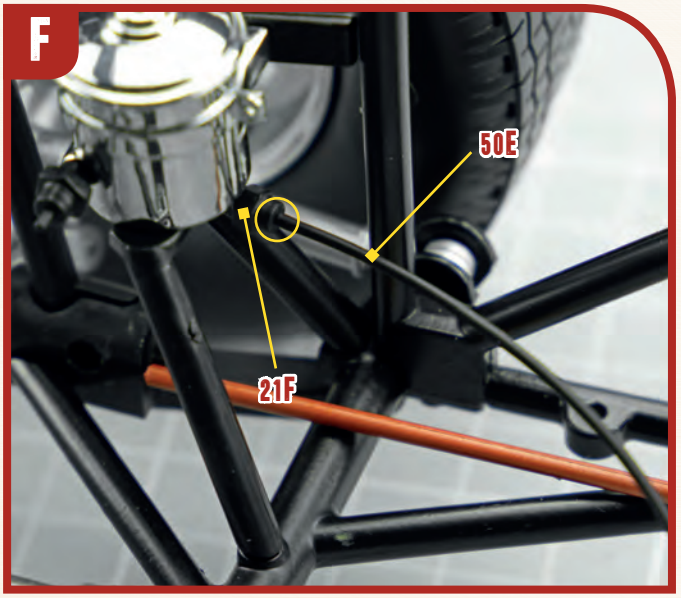

51 PARTS LIST



51A Steering box
51B Steering gear
51C Steering support

DM 2 screws (2x4mm)
HM 3 screws (2.3x5mm)
PM 2 screws (2x3x6mm)

UM 4 screws (1.7x5mm)

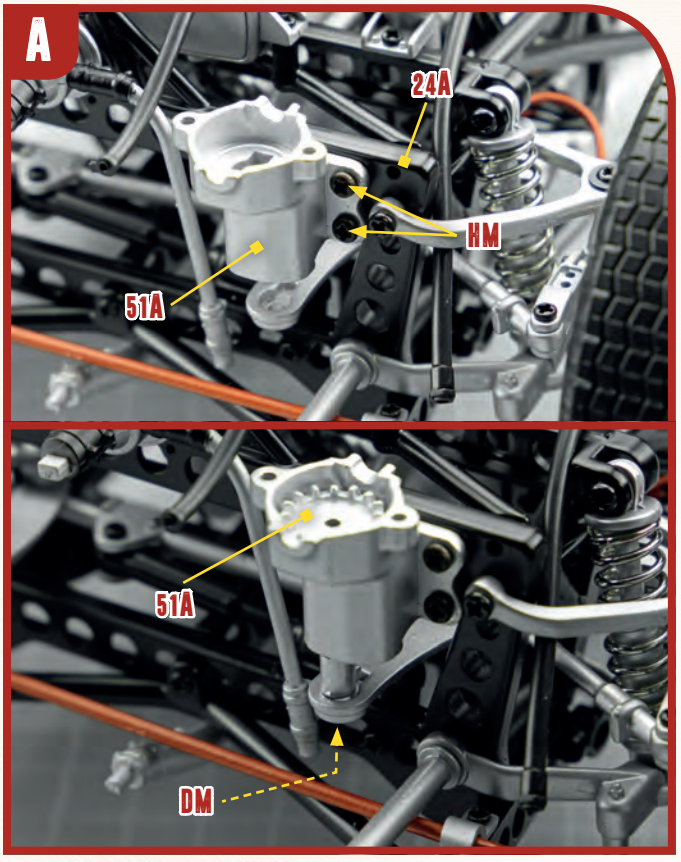

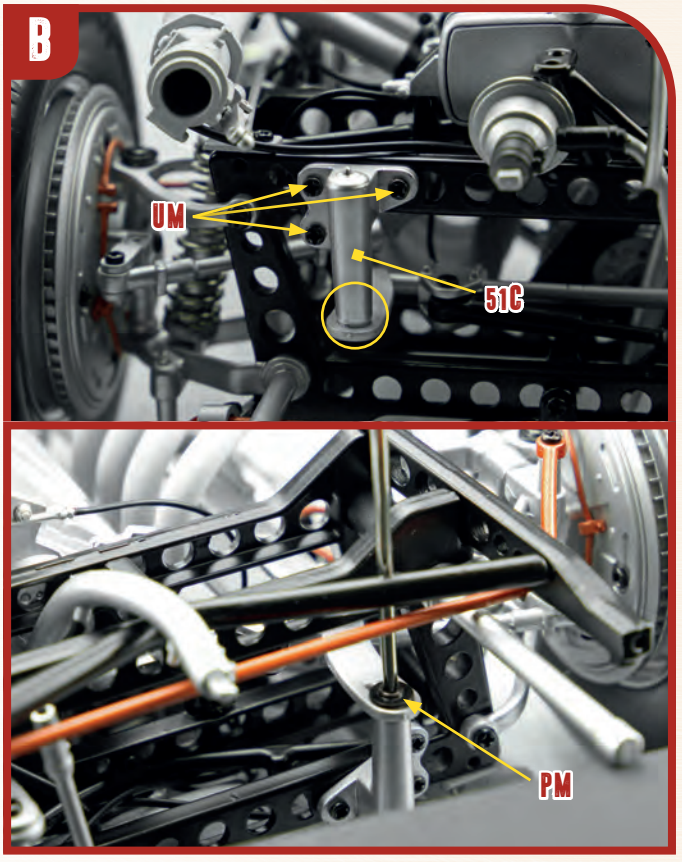

52 PARTS LIST

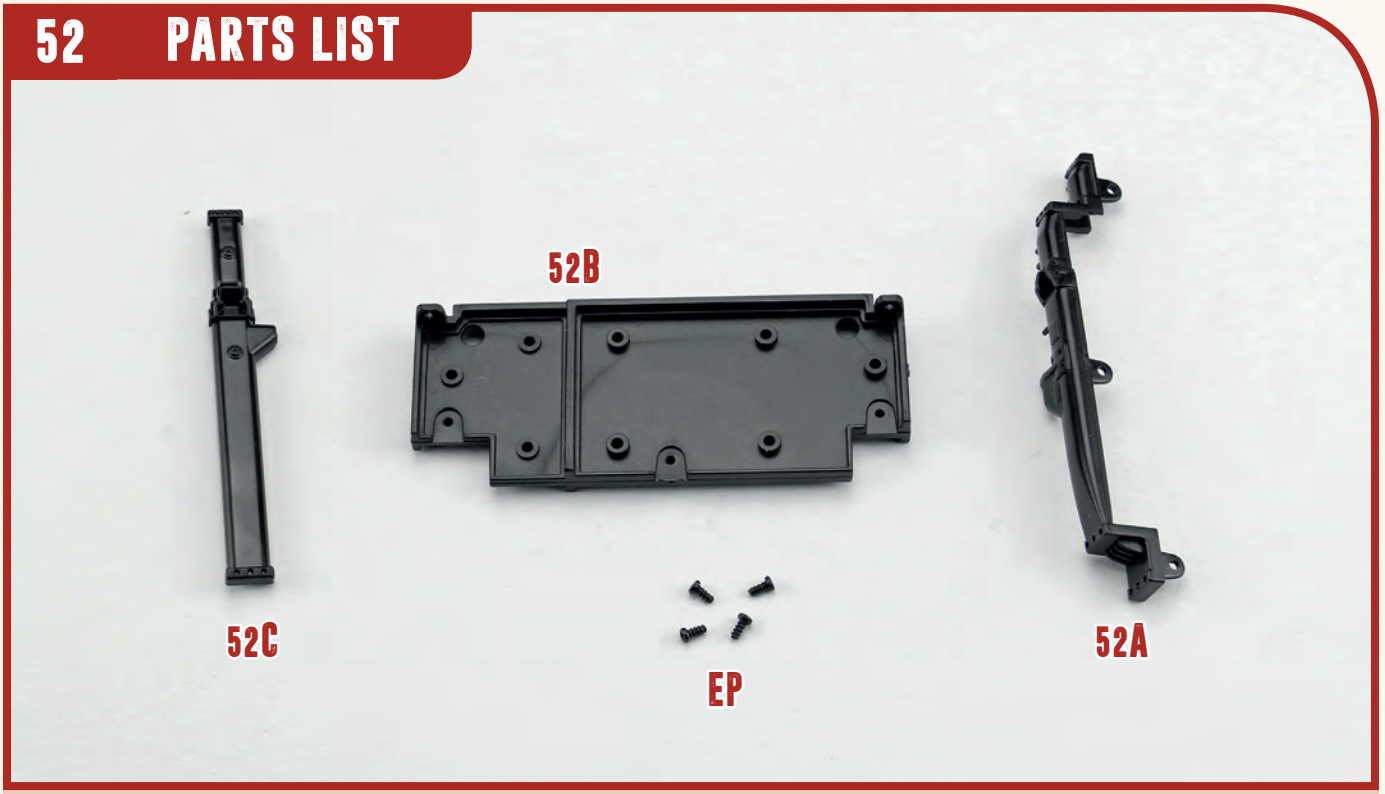

52A Radiator upper cover
52B Radiator frame
52C Radiator lower cover
EP 4 screws (2x4mm)

A

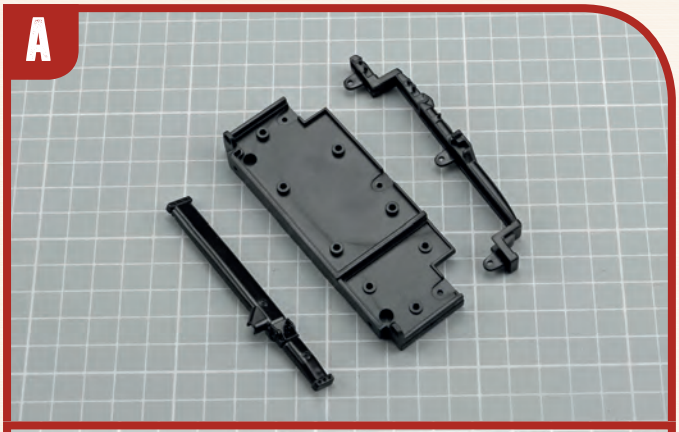

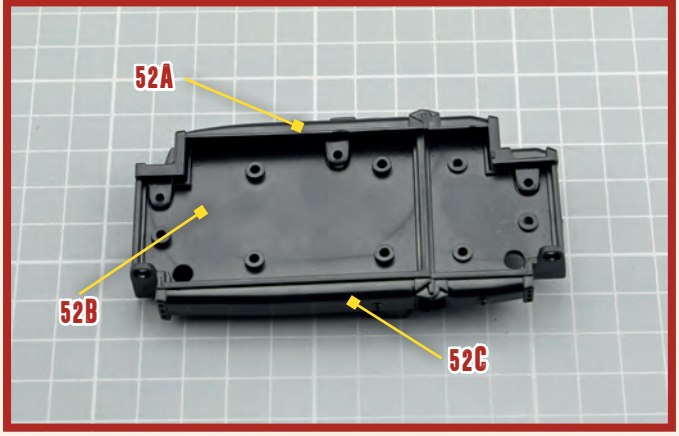

B

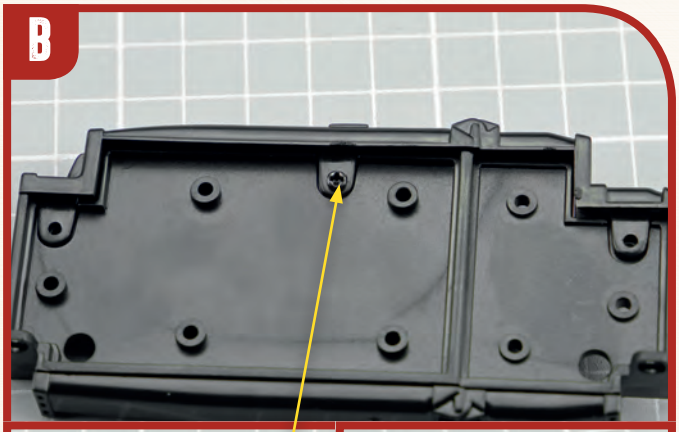

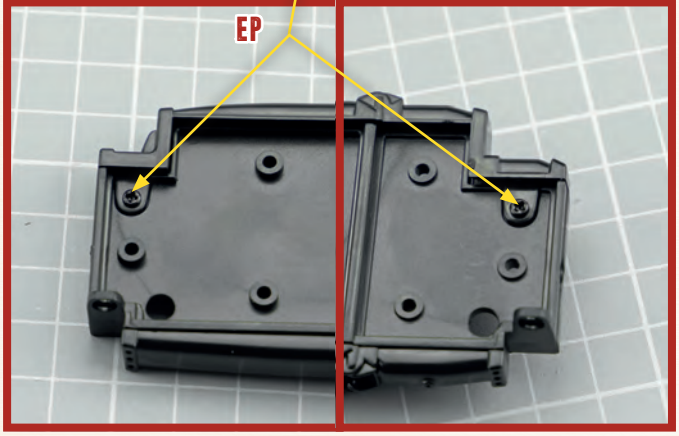

53 PARTS LIST



53A Radiator front panel
53B Radiator rear panel

A

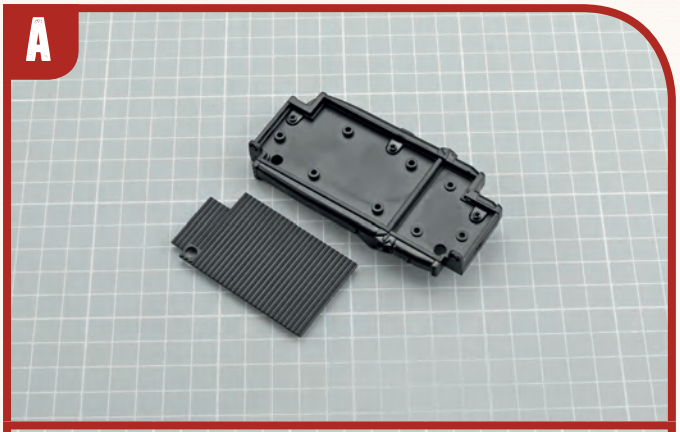

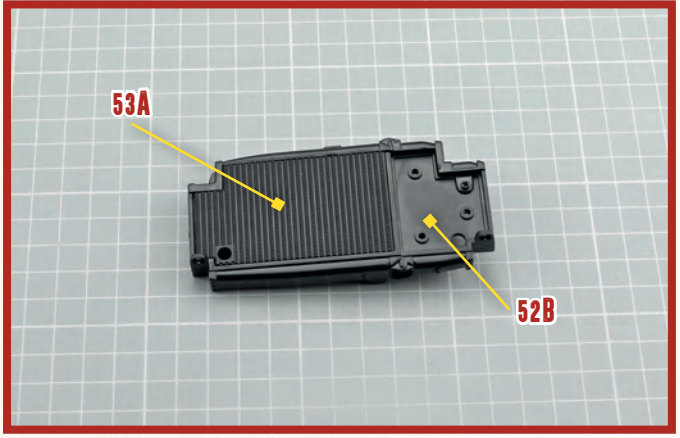

B

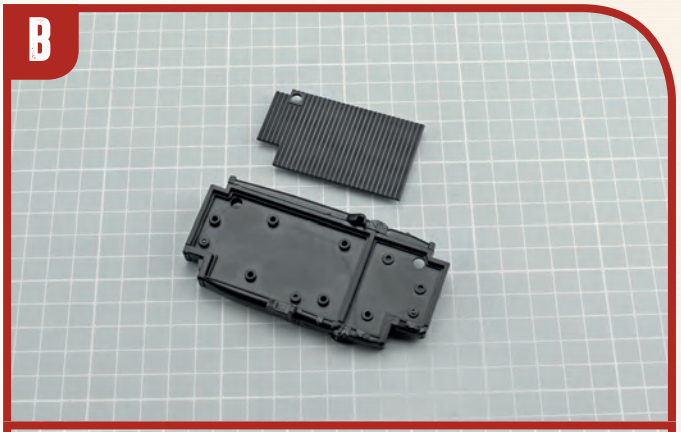

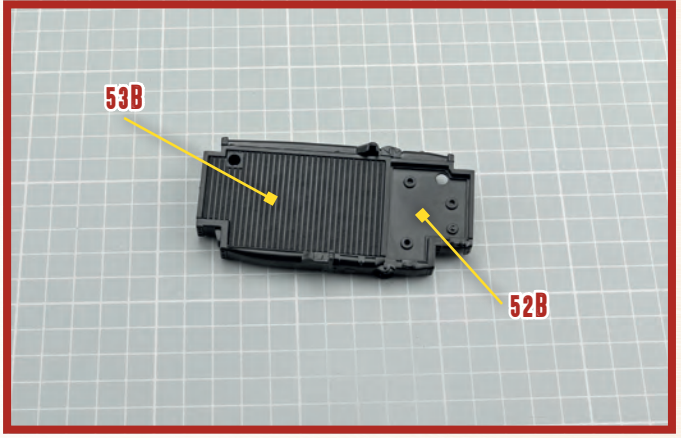

54 PARTS LIST

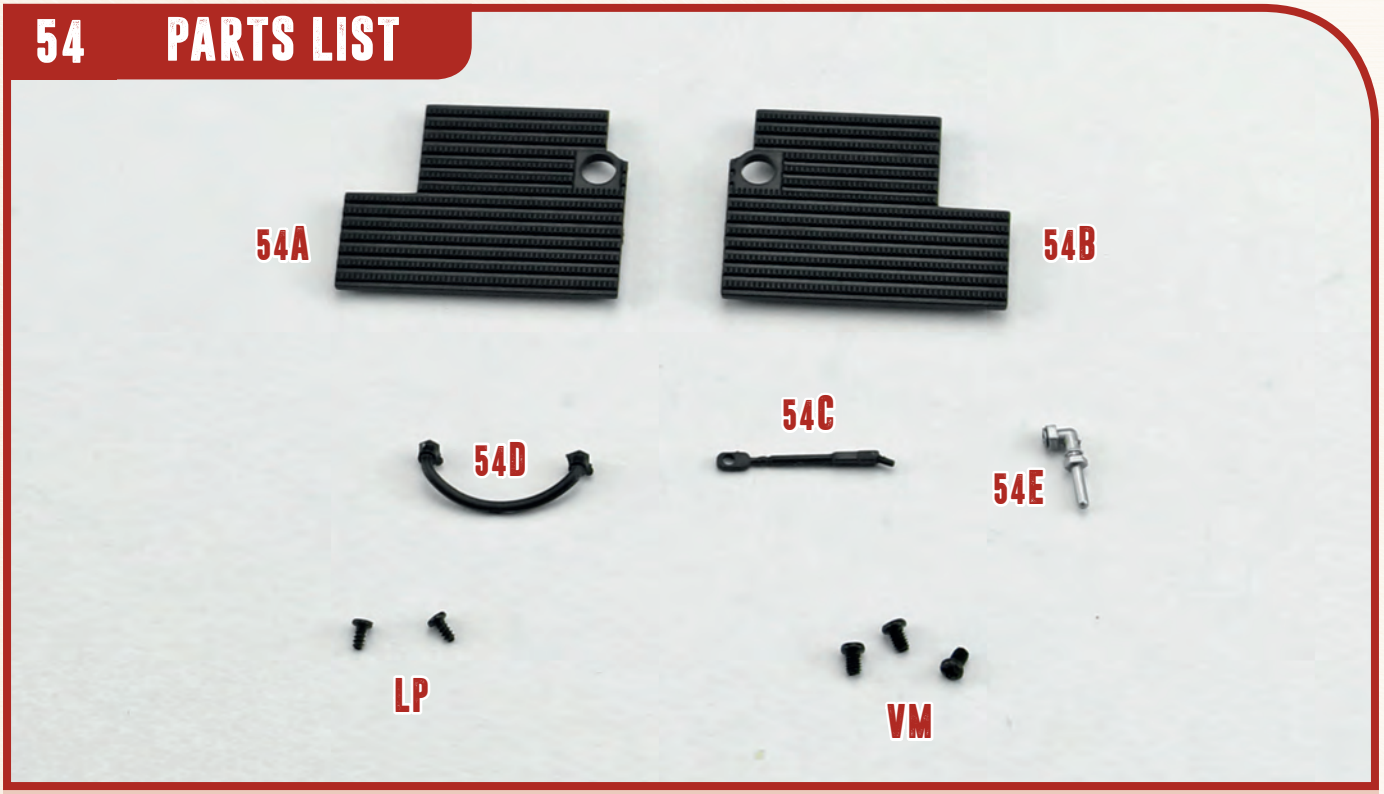

54A Oil radiator front panel
54B Oil radiator rear panel
54C Radiator shock absorber
54D Pipe 1
54E Pipe 2
LP 2 screws (1.5x3mm)
VM 3 screws (2x3mm)

A

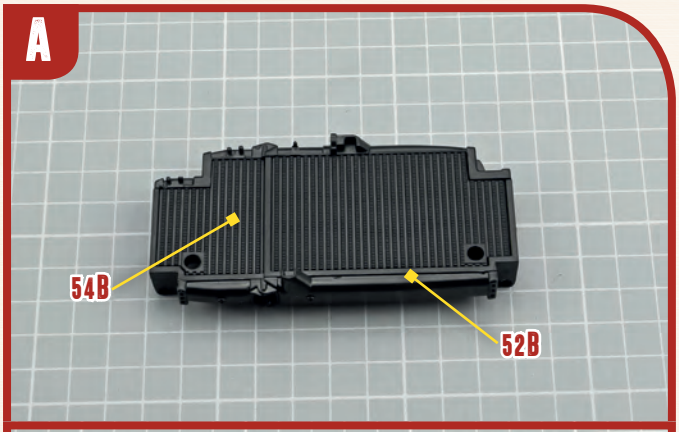

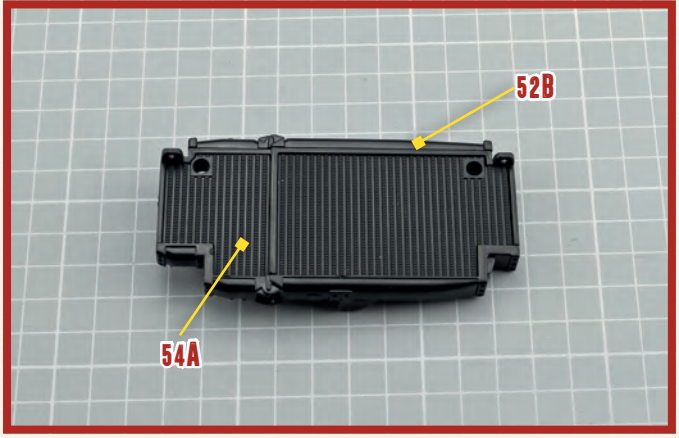

B

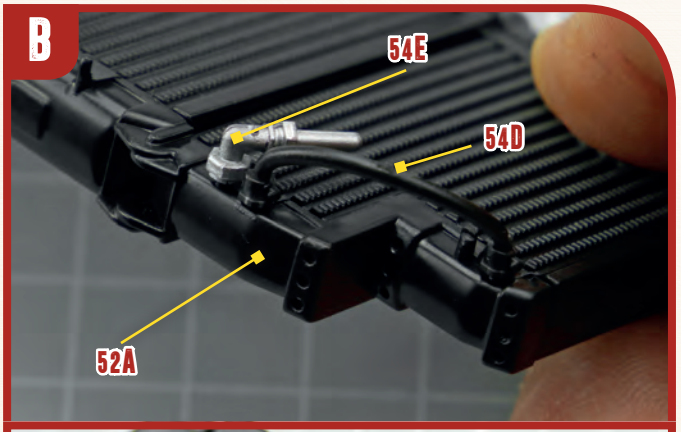

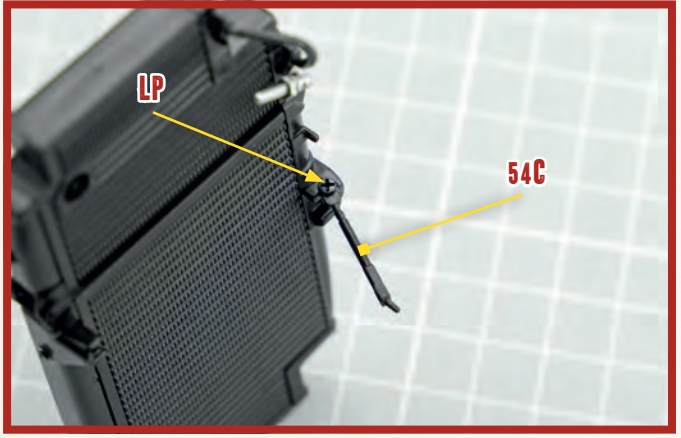

C

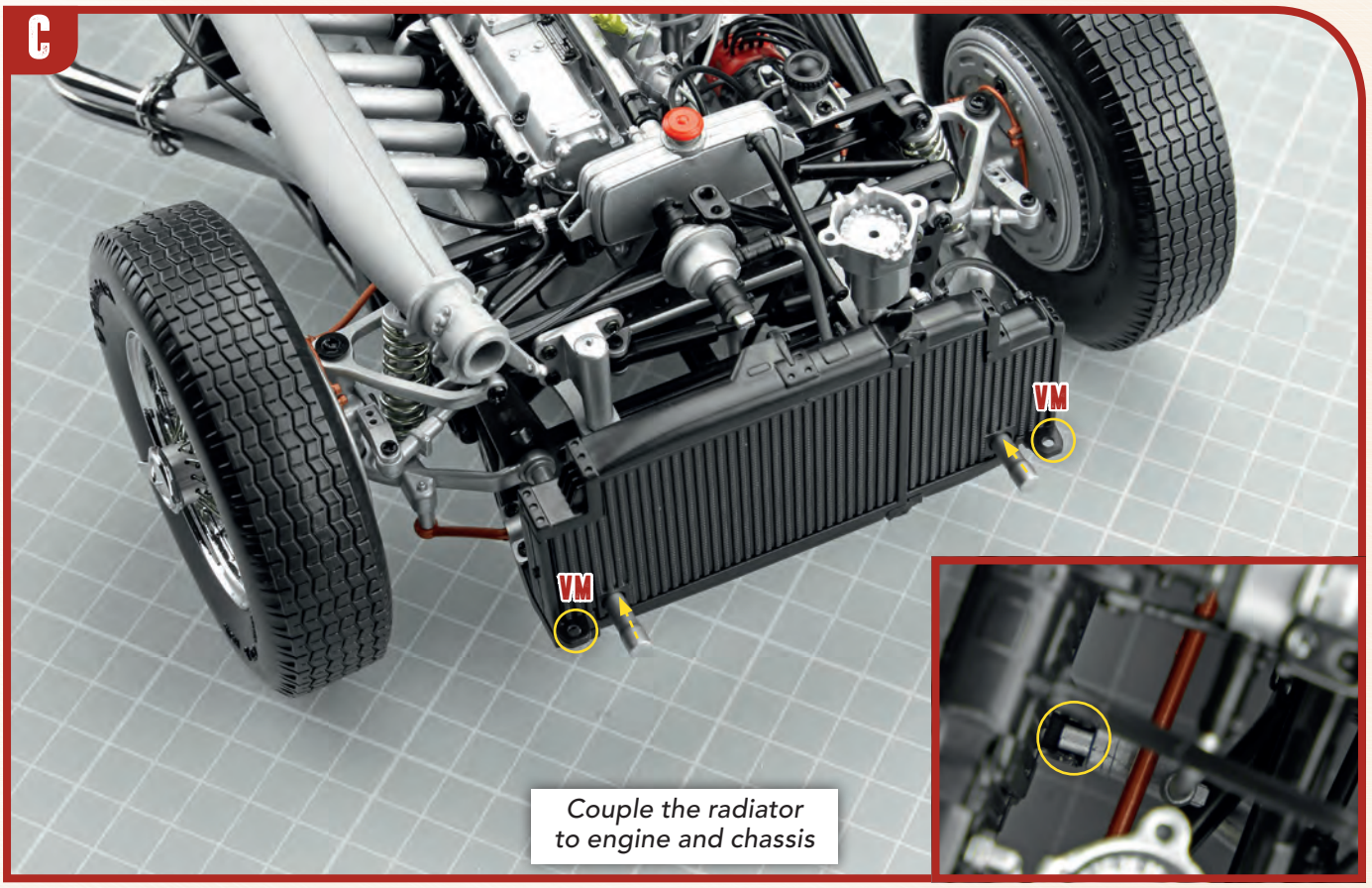

Couple the radiator to engine and chassis

D

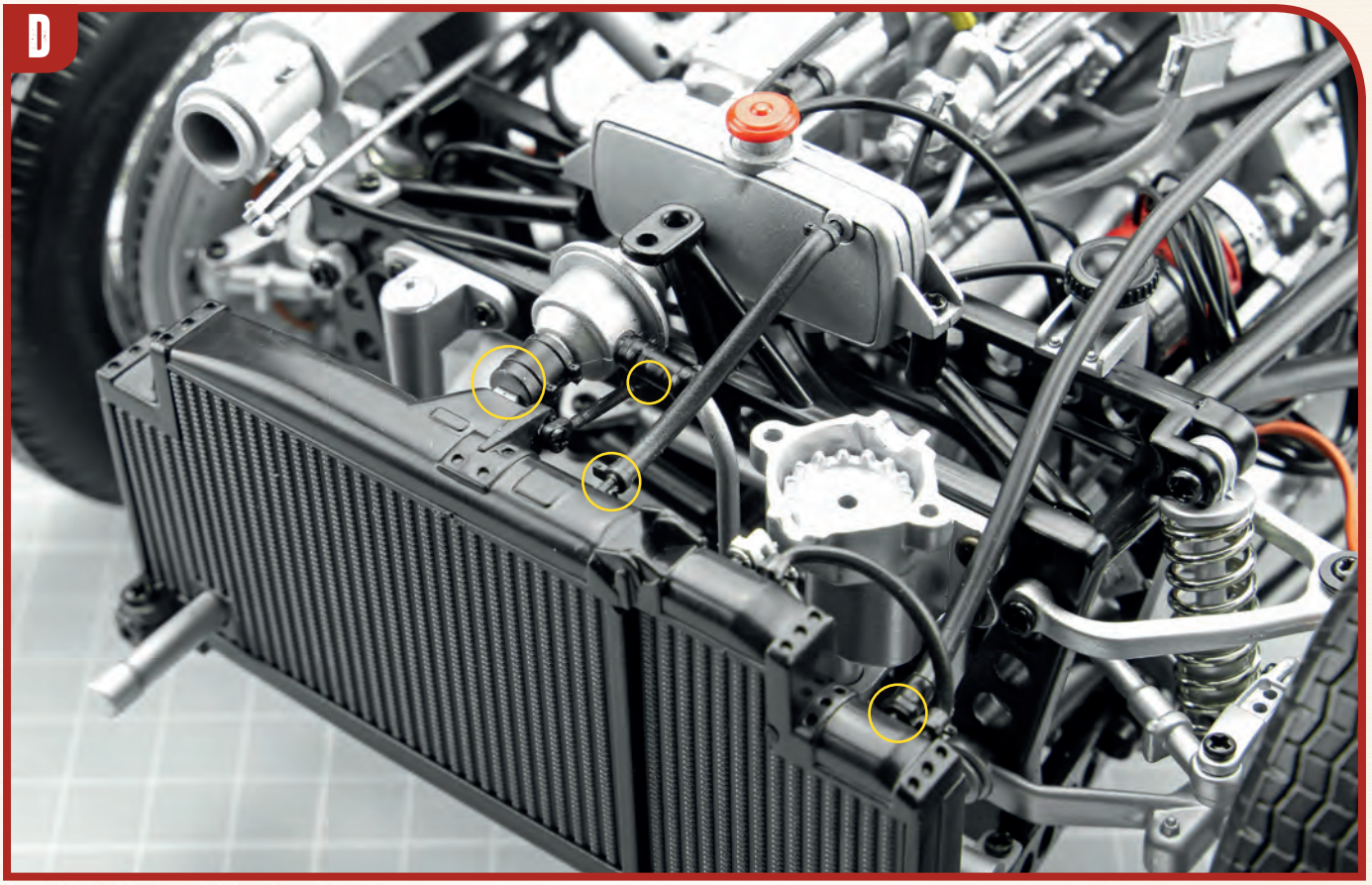

55 PARTS LIST



55A Seat frame
55B Seatback
55C Back padding
BP 3 screws (2x5mm)

A

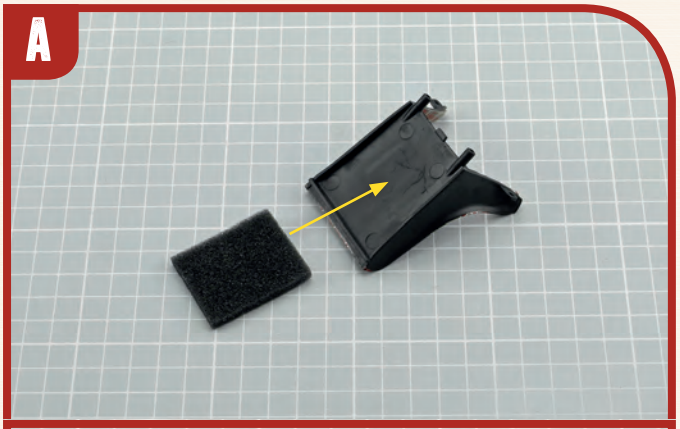

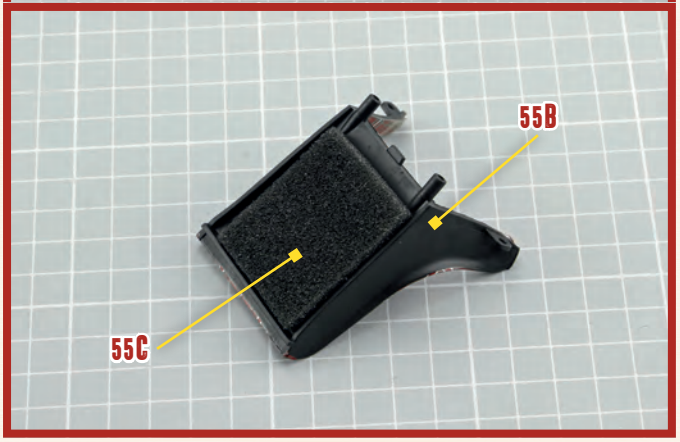

A

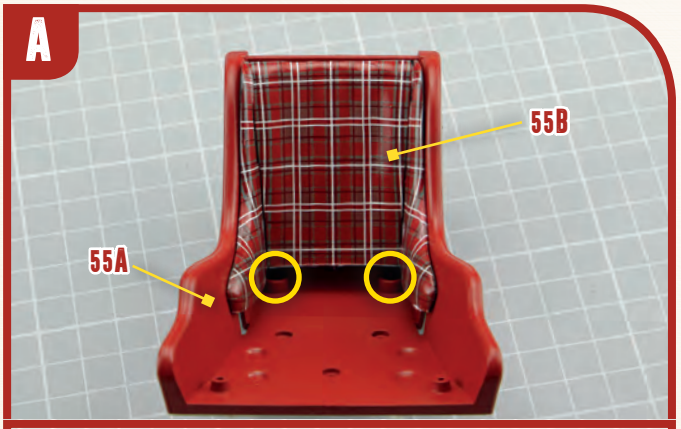

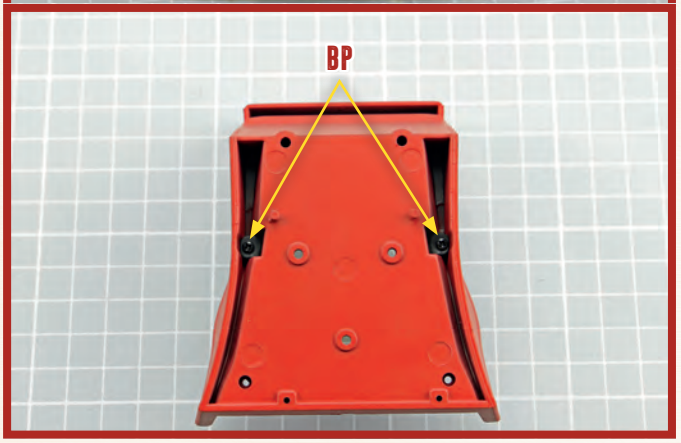

56 PARTS LIST



56A	Seat
56B	Seat padding
56C	Frame part A
56D	Frame part B
56E	Headrest
AP	5 screws (1.7x4mm)
BP	4 screws (2x5mm)
EP	5 screws (2x4mm)
PP	3 screws (2.6x7mm)

A

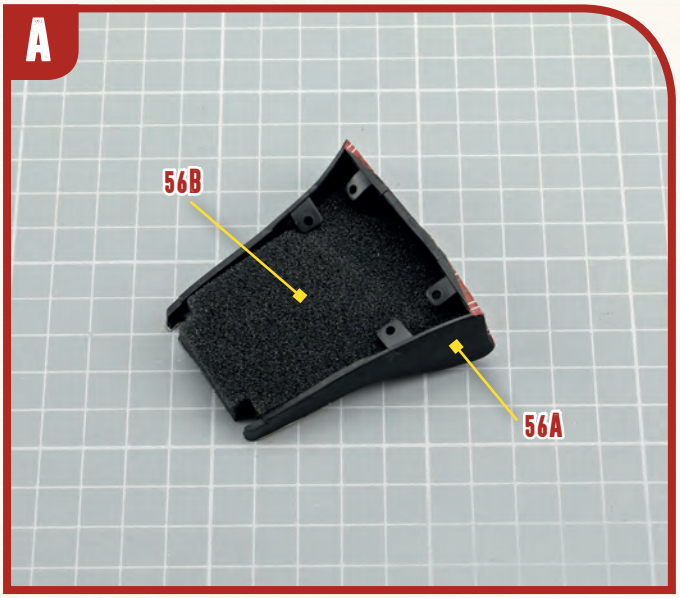

B

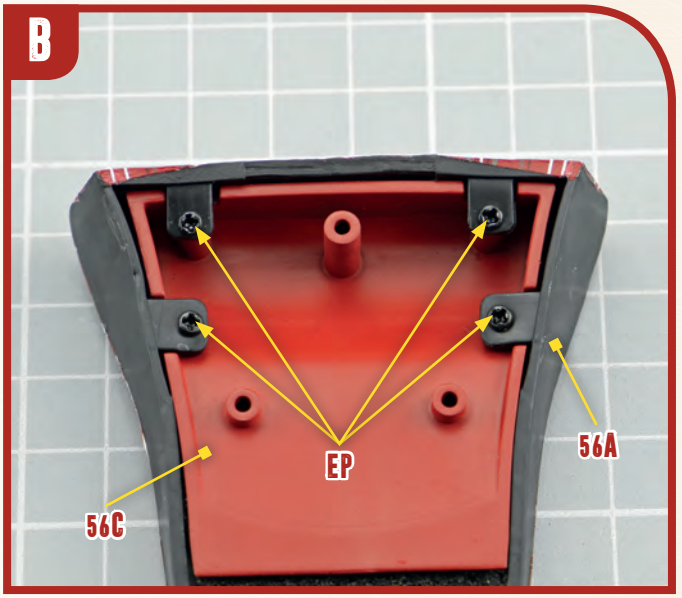

C

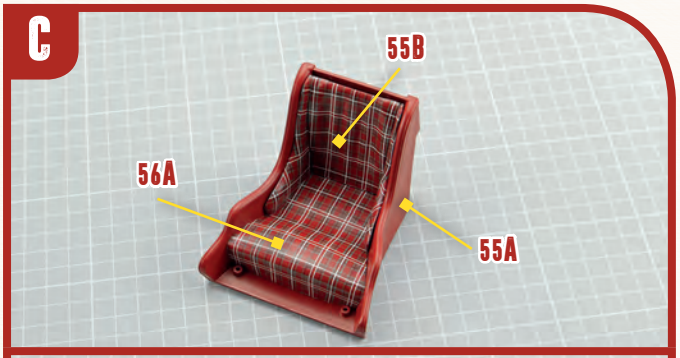



D

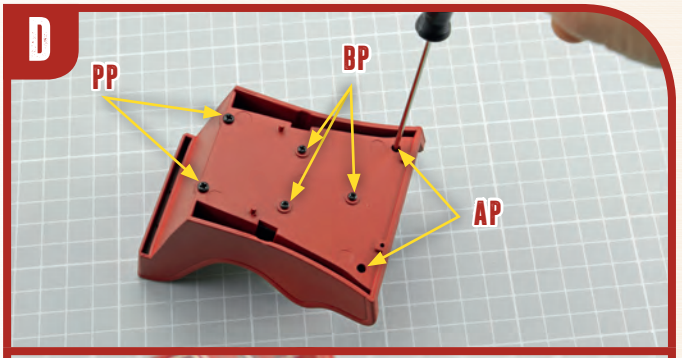

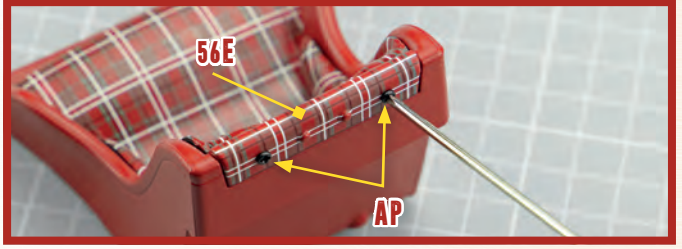

57 PARTS LIST

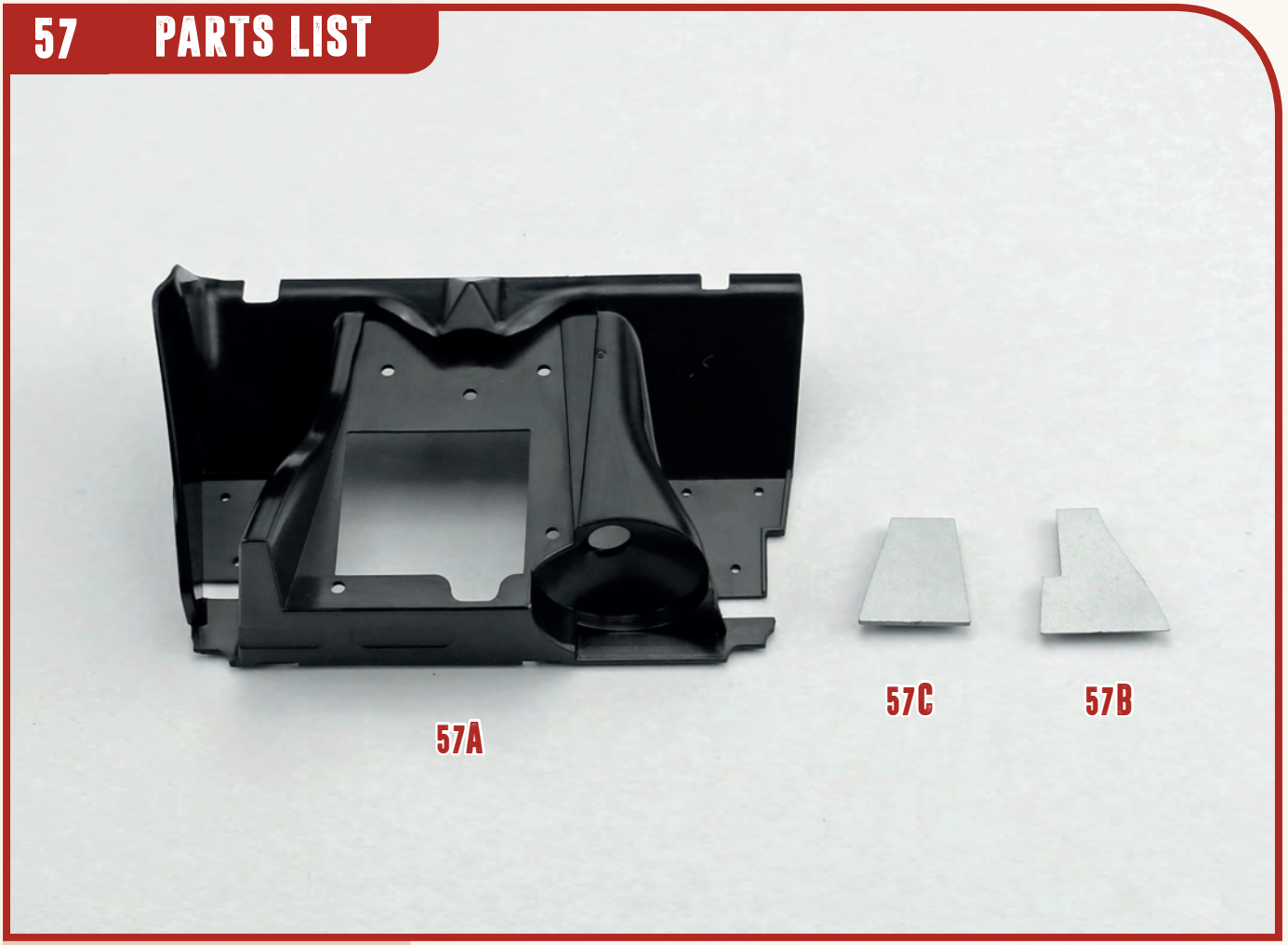

57A Cockpit floor panel
57B Panel 1
57C Panel 2

A

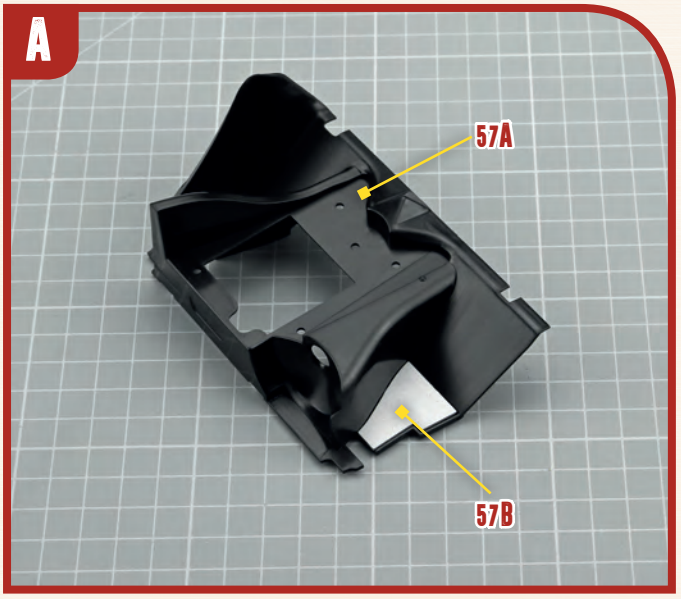

B

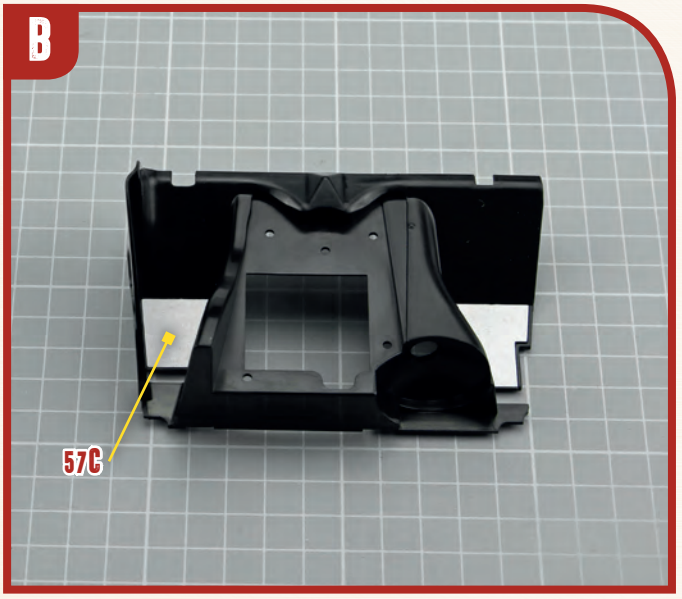

58 PARTS LIST

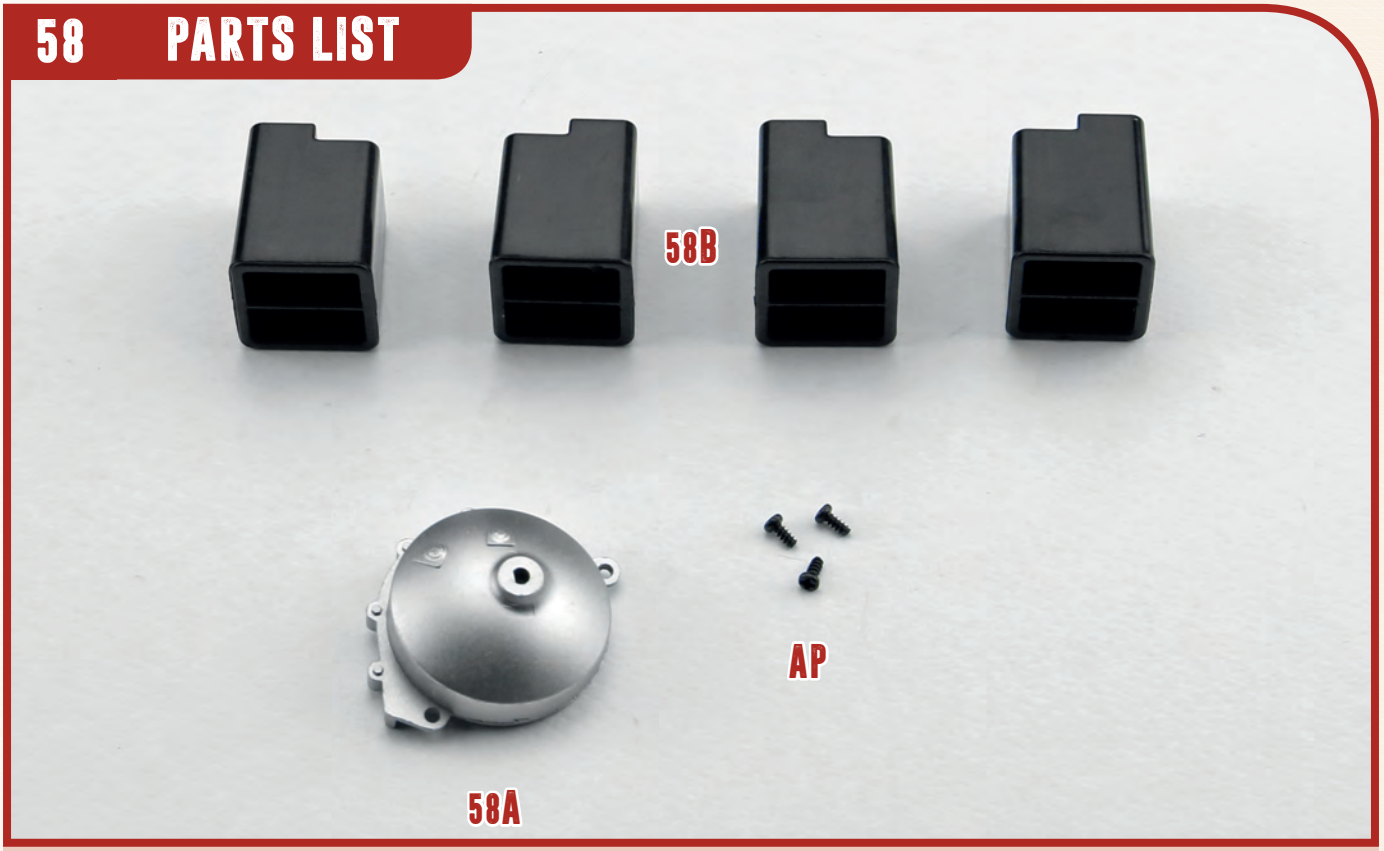

58A Clutch bell housing
58B Model supports (x4)*

AP 3 screws (1.7x4mm)

* You may choose to put supports 58B beneath your model to keep wheels raised.

A

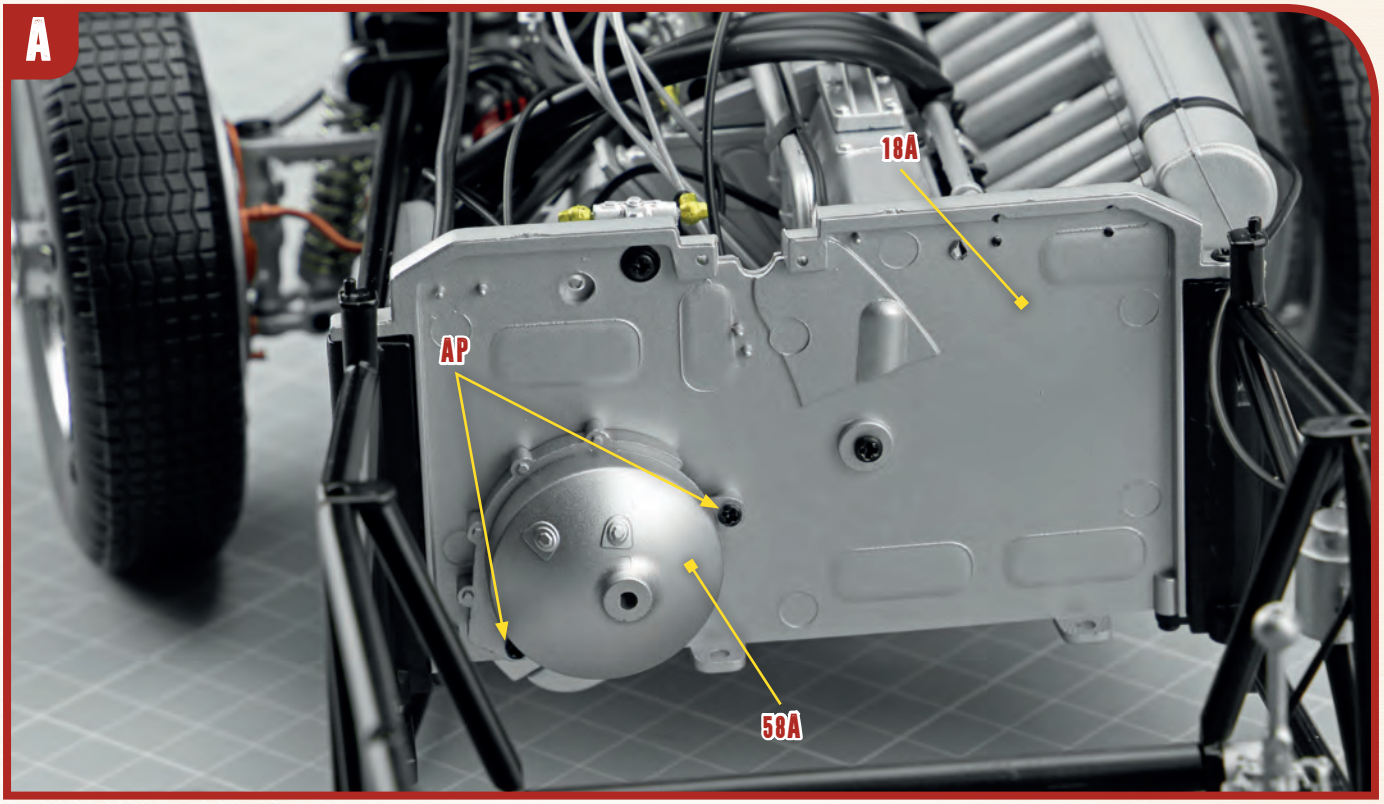

59 PARTS LIST

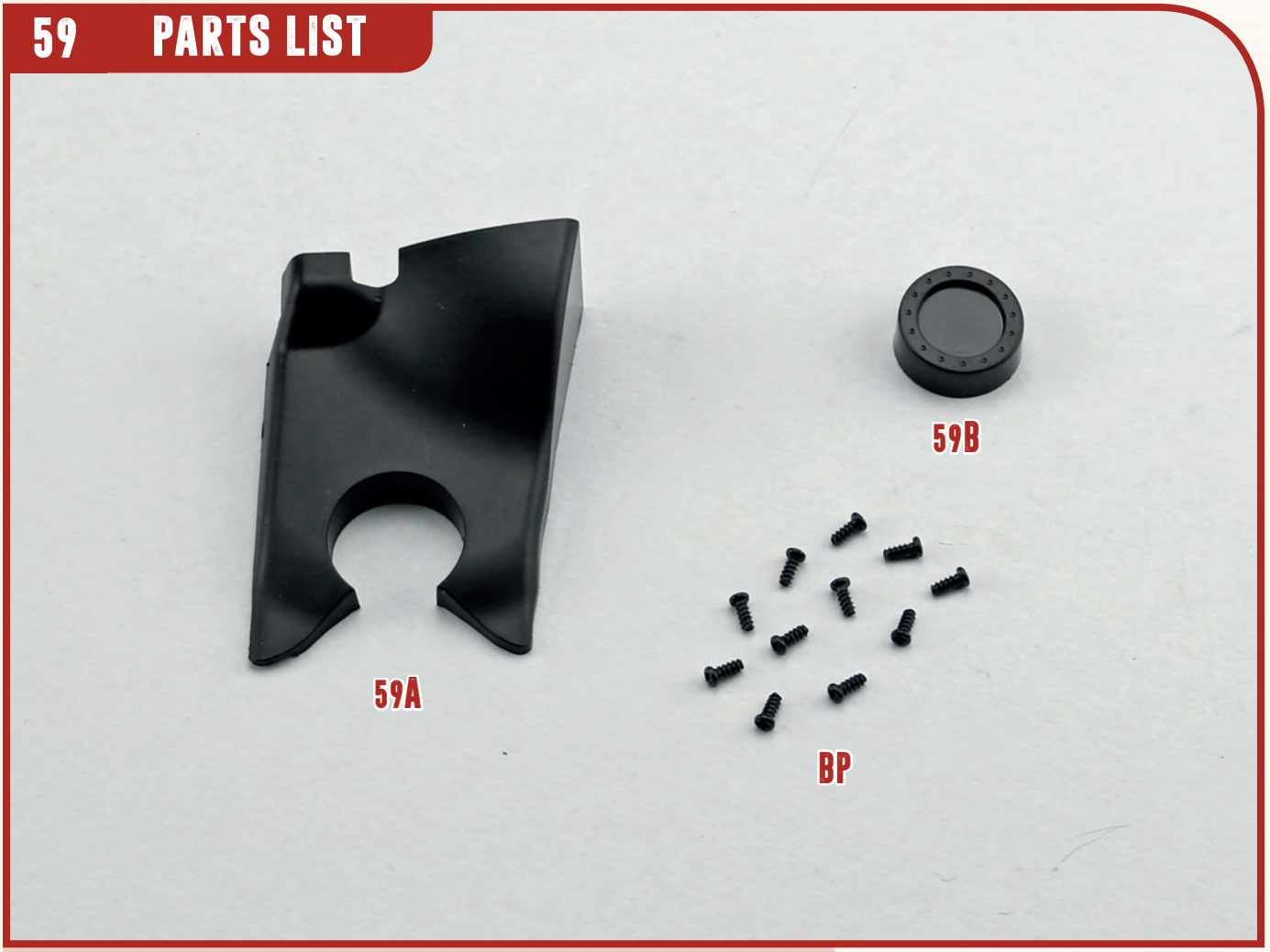

59A Panel 1
59B Panel 2
BP 11 screws (2x5mm)

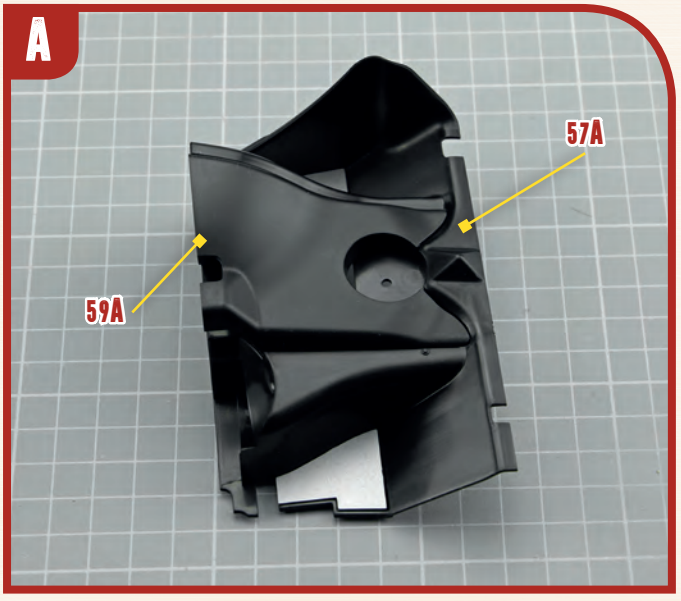

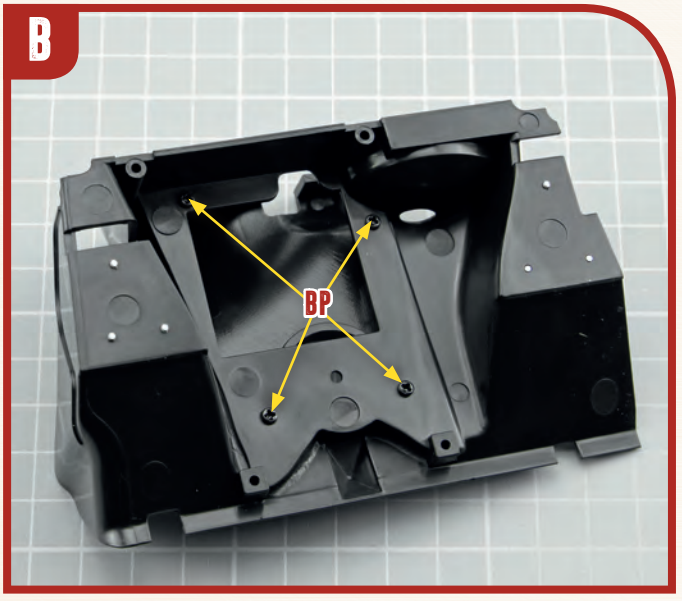

C

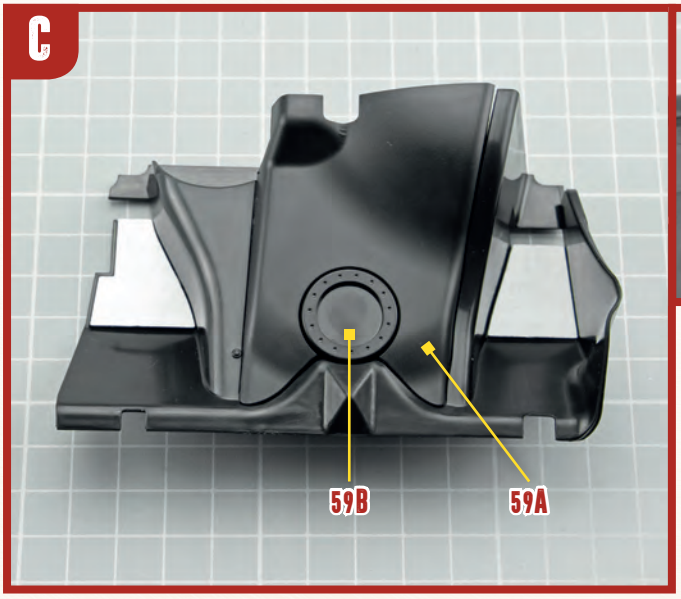

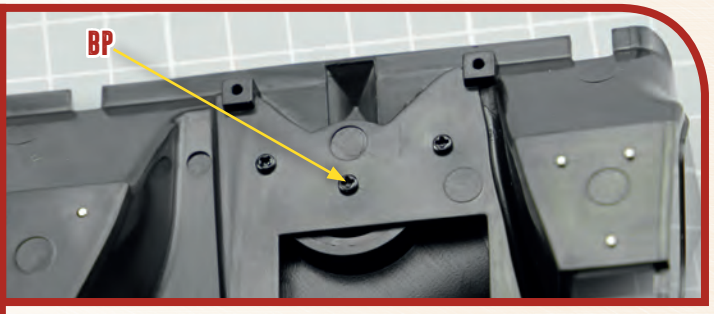

D

Loosen the two highlighted screws by half a turn

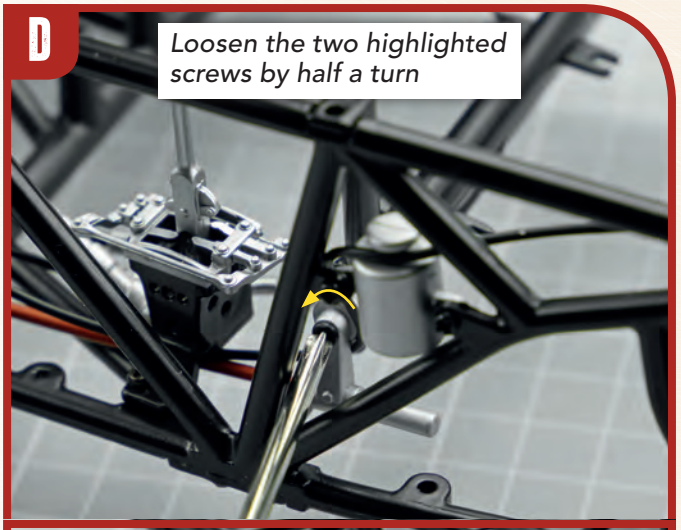

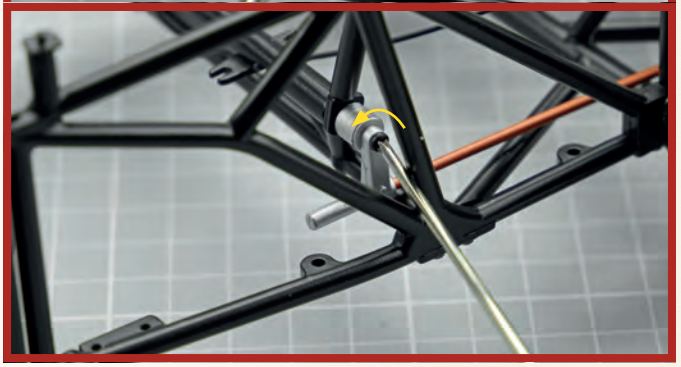

E

Mount the cockpit floor panel on the chassis

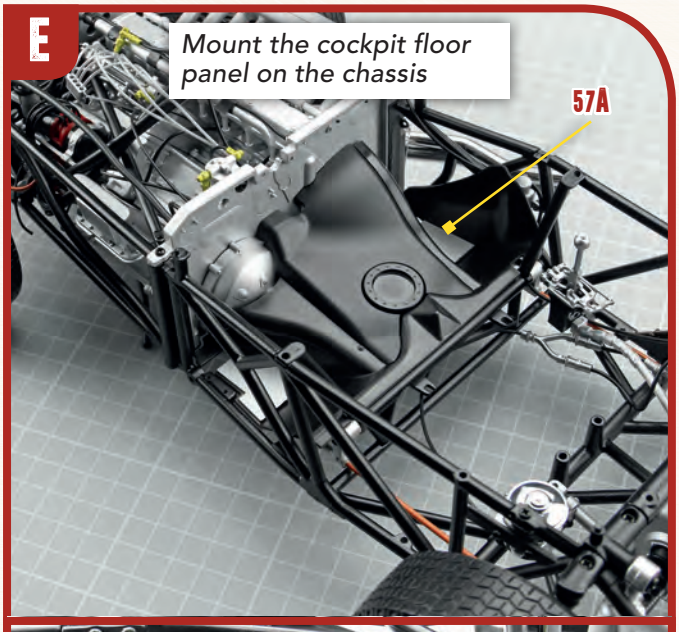

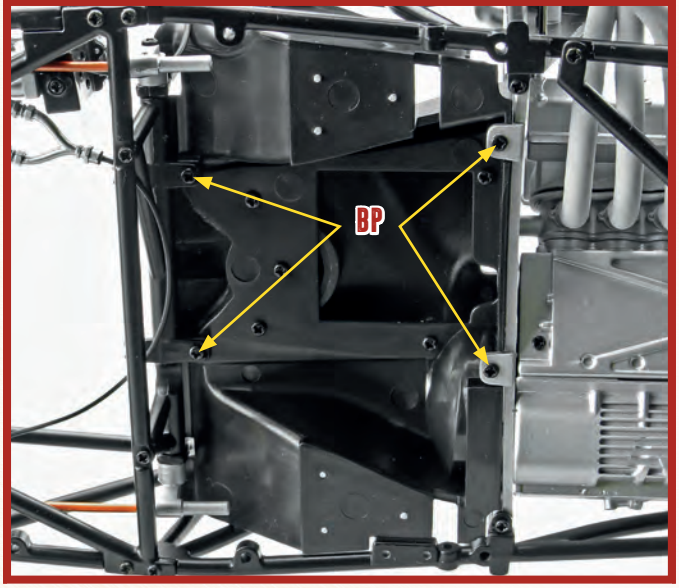

F

Tighten back the two loosened screws

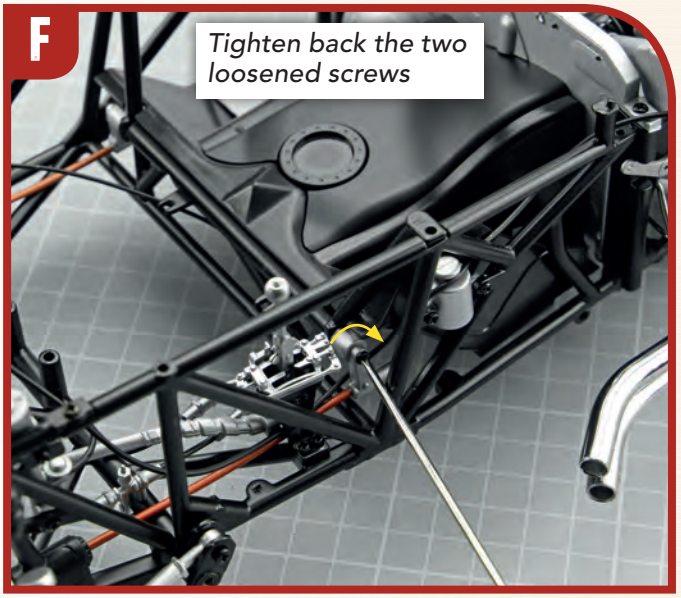

60 PARTS LIST

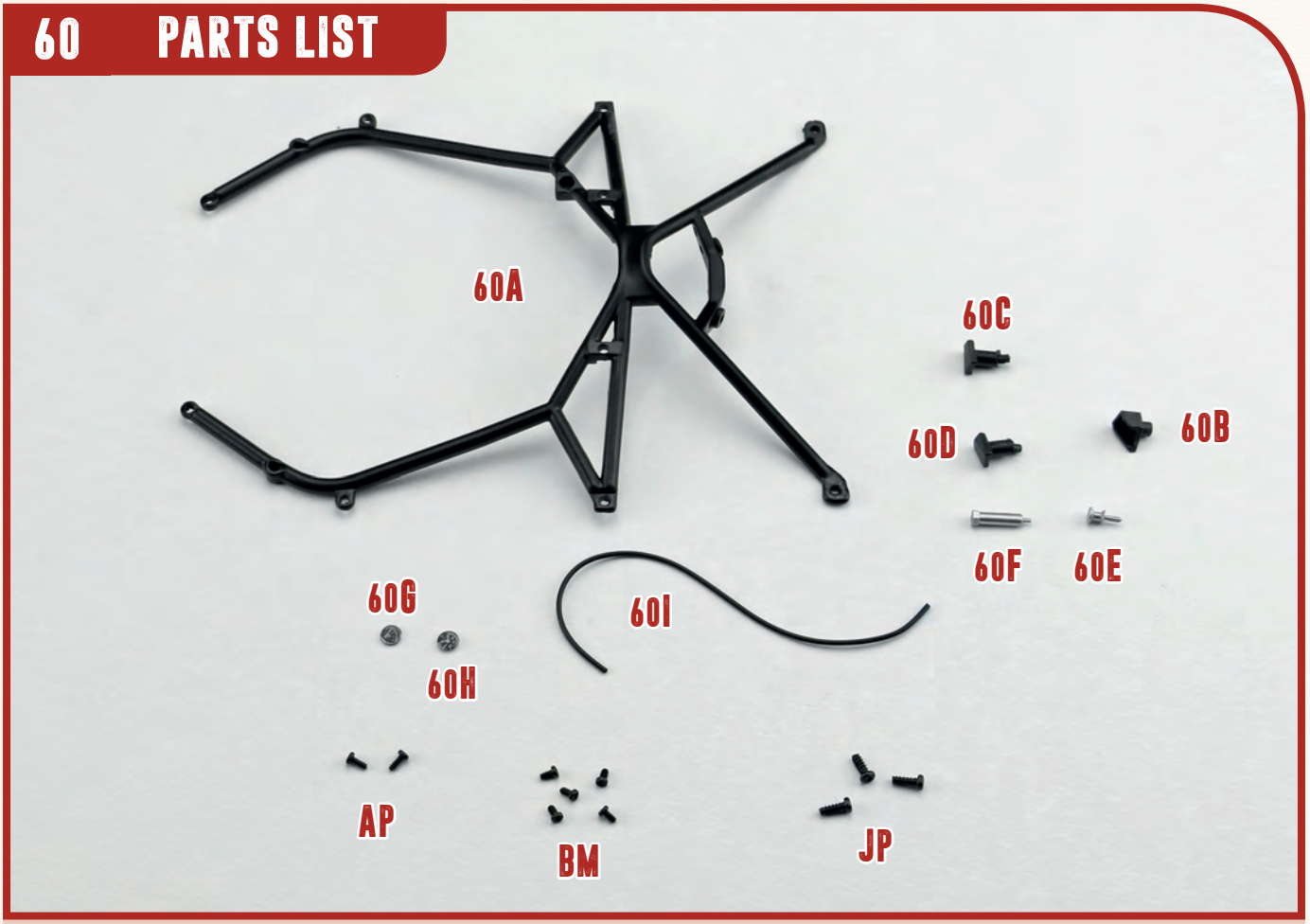

60A Cockpit frame
60B Detail 1
60C Detail 2
60D Detail 3
60E Detail 4
60F Detail 5
60G Oil pressure gauge
60H Water temperature gauge
60I Tube
AP 2 screws (1.7x4mm)
JP 3 screws (2.3x6mm)
BM 5 screws (1.7x3mm)

A

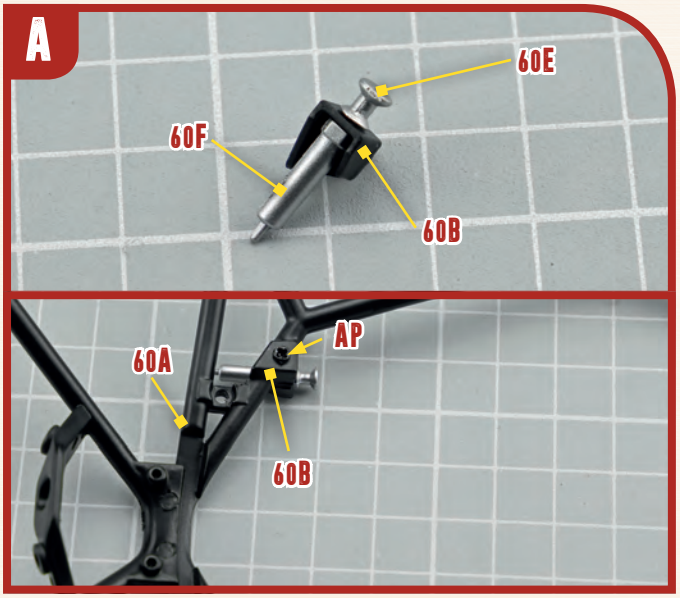

B

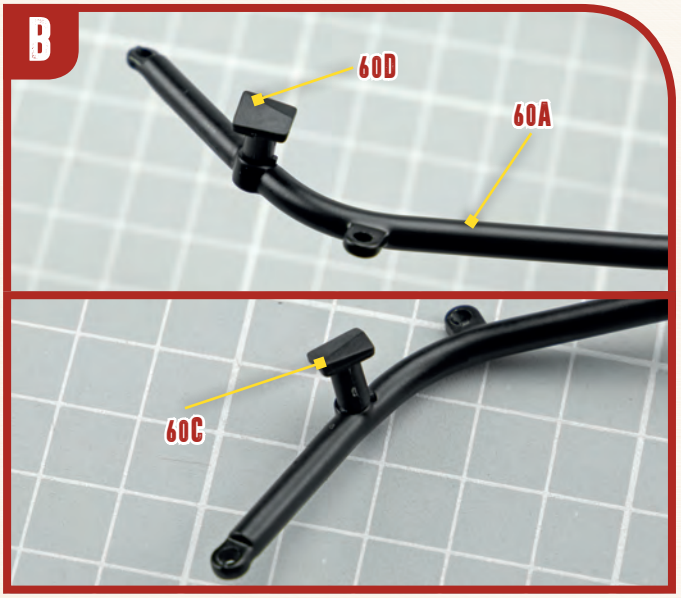

C

Replace 2J and 2K with 60G and 60H

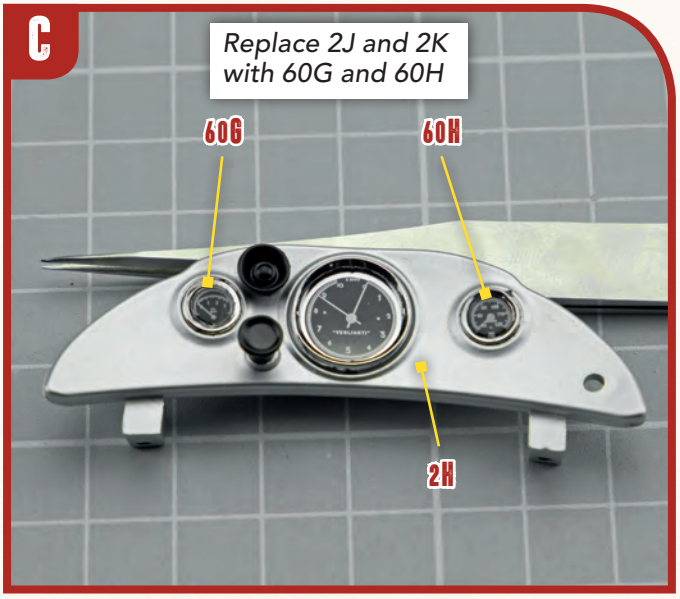

D

Temporarily separate steering wheel and panel 3L from steering column and couple steering column to cockpit frame

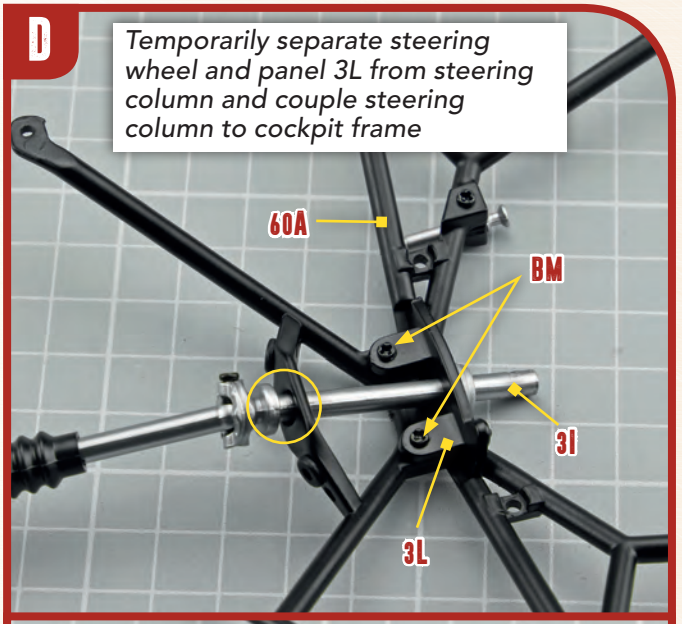

E

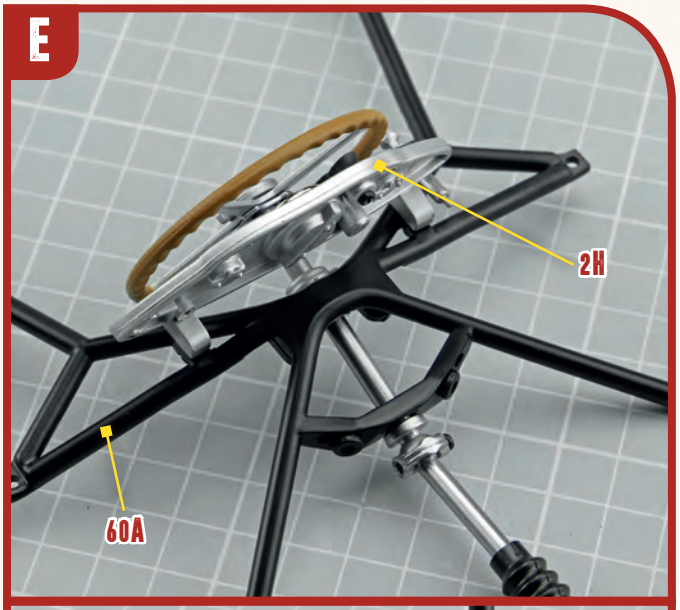

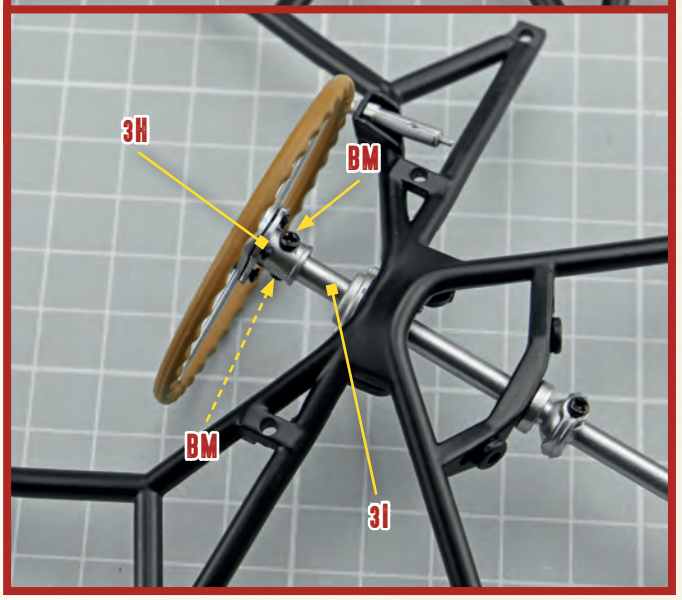

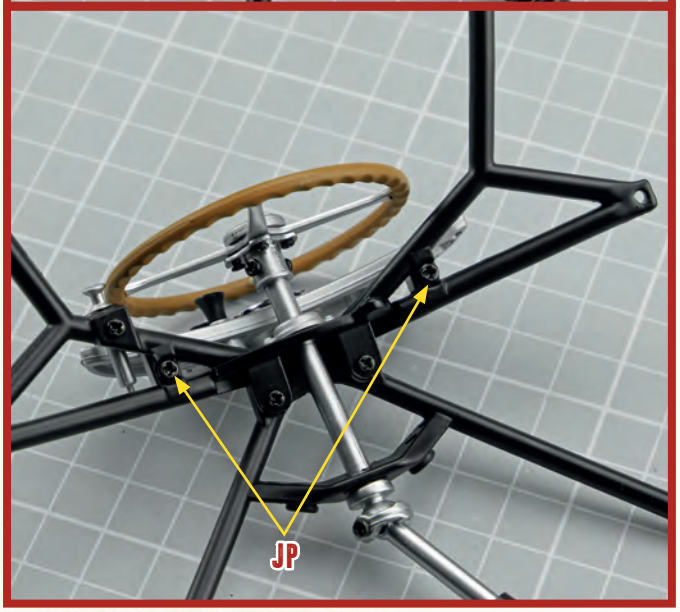

F

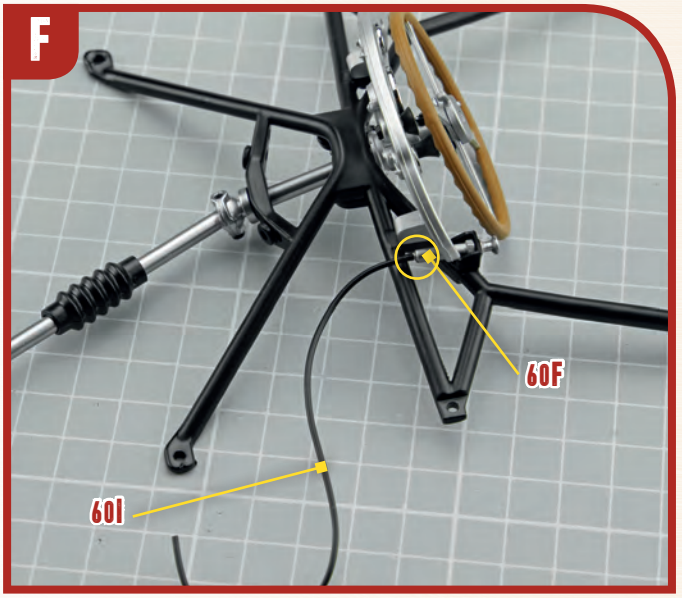

61 PARTS LIST



61A	Firewall bar
61B	Wire
61C	Wire bracket
61D	Steering box cover
61E	Steering column bracket
EP	3 screws (2x4mm)
MP	2 screws (2x3mm)
DM	8 screws (2x4mm)
MM	3 screws (2x7mm)
WM	5 screws (2x6mm)

A

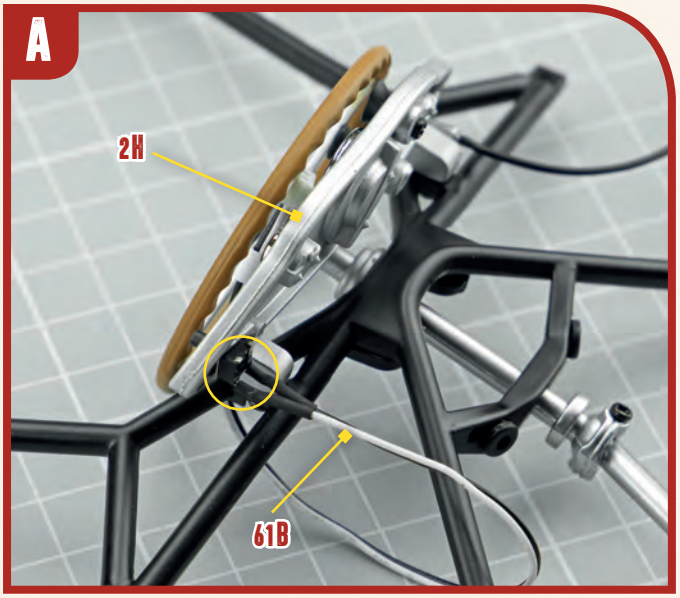

B

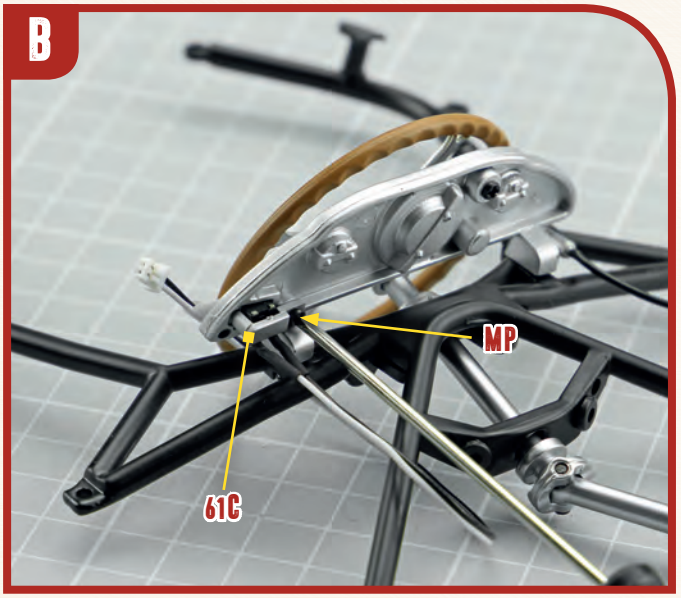

C

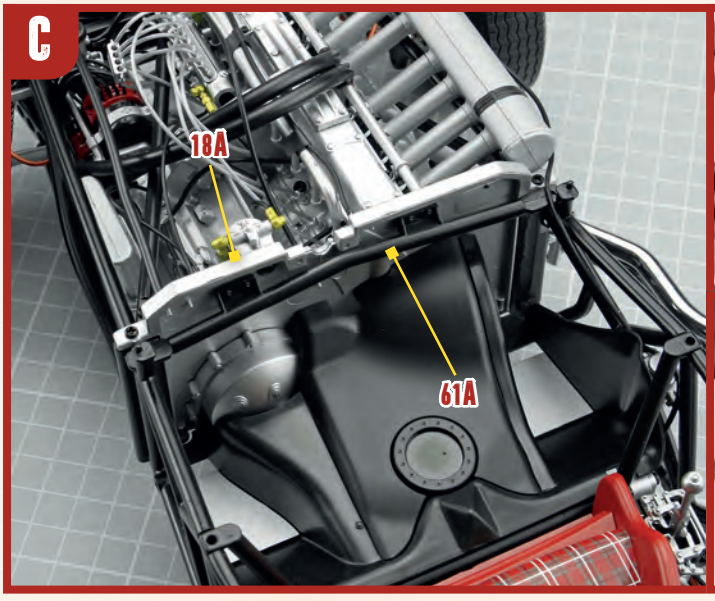

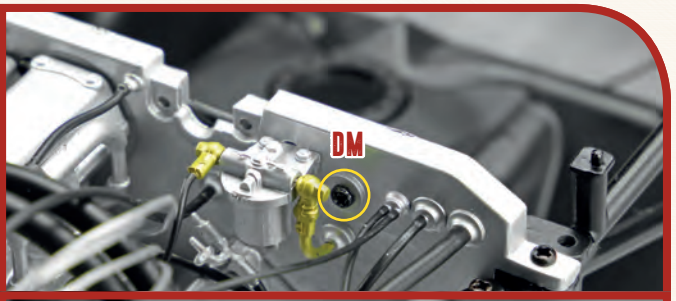



D

Mount cockpit frame and steering column on chassis

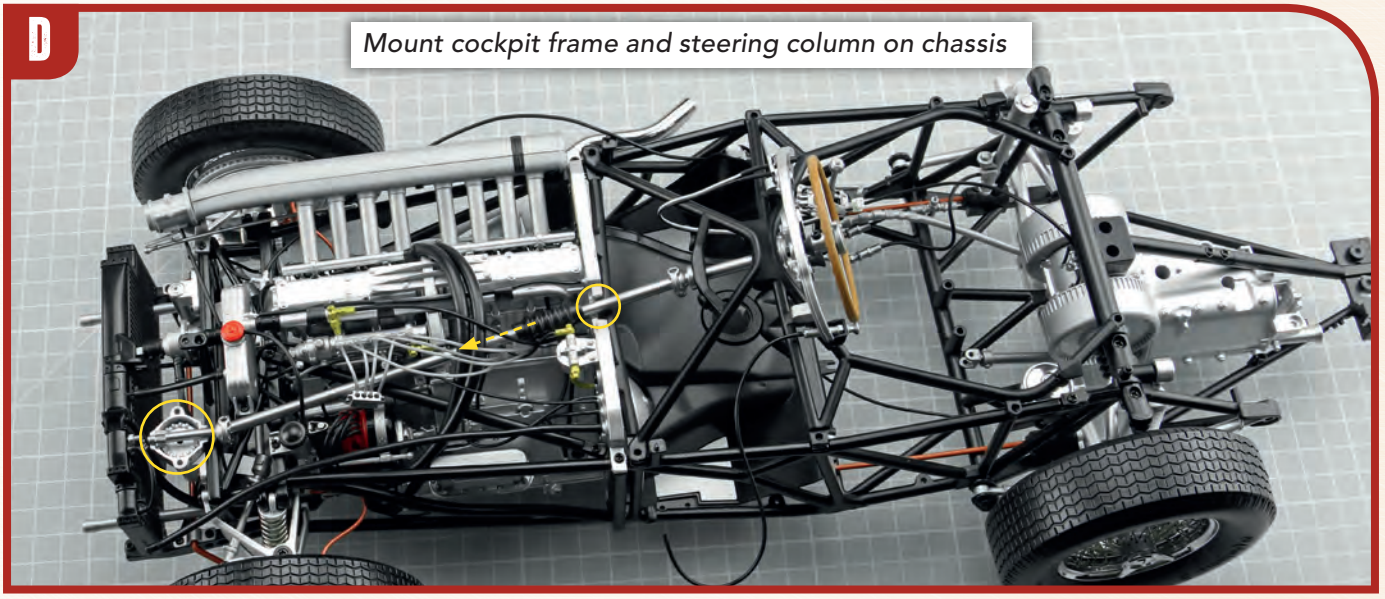

E

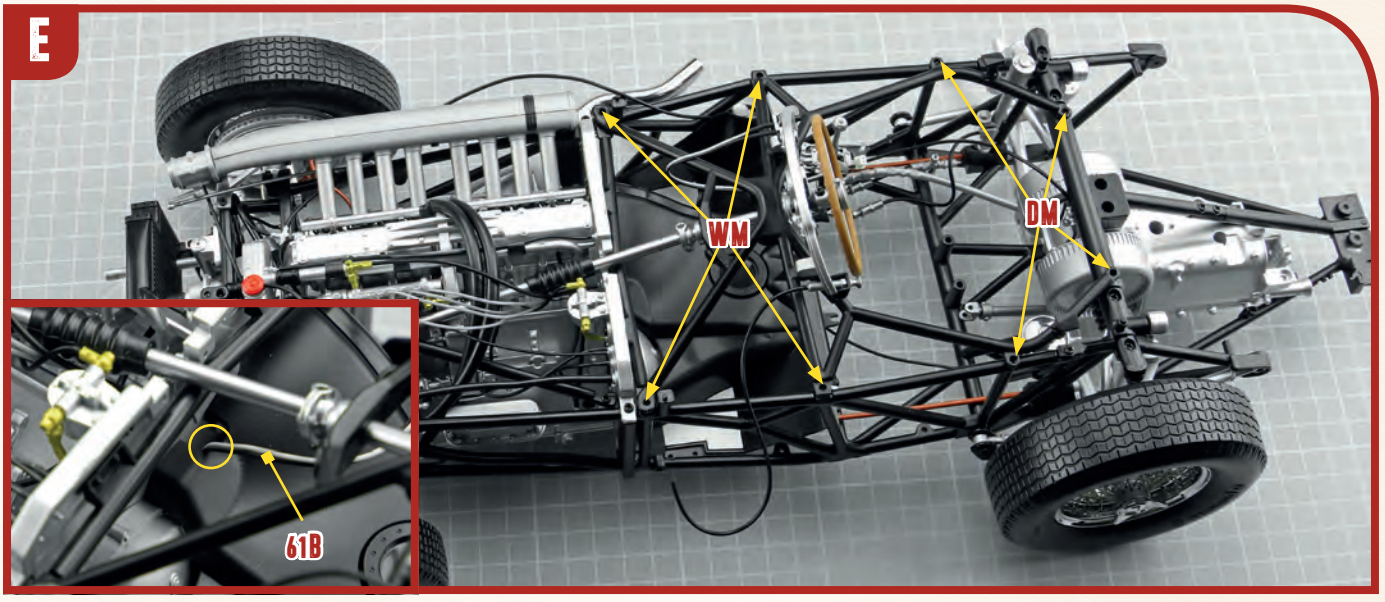

F

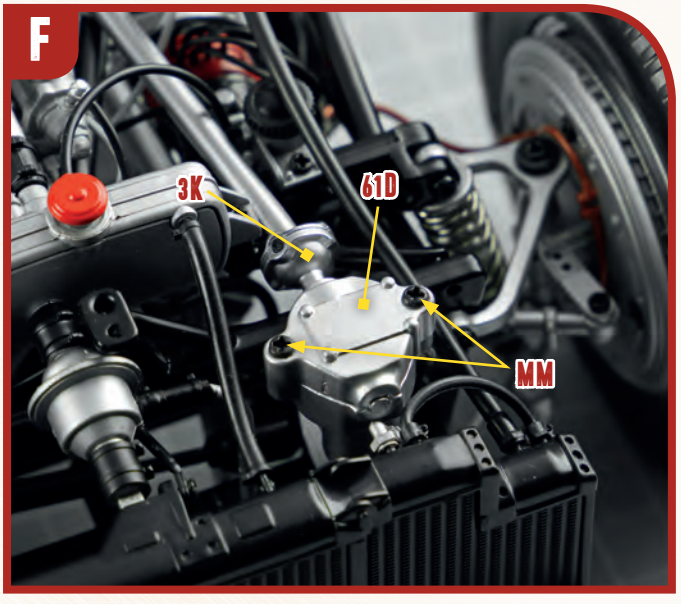

G

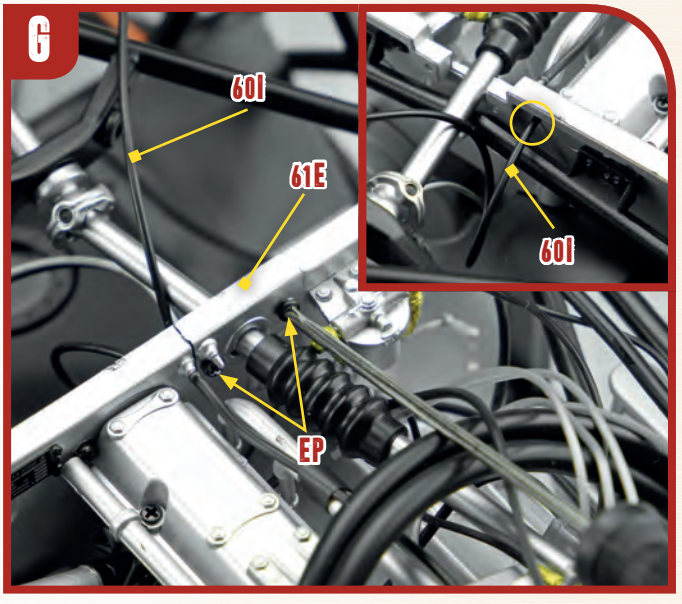

62 PARTS LIST



62A Shaft
62B Joint 1
62C Joints 2 (x2)

EP 3 screws (2x4mm)
KP 10 screws (1.7x3mm)

A

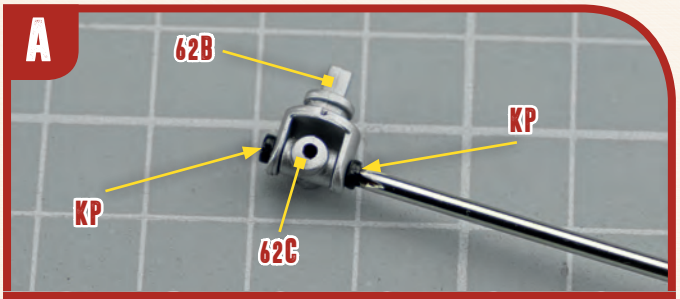

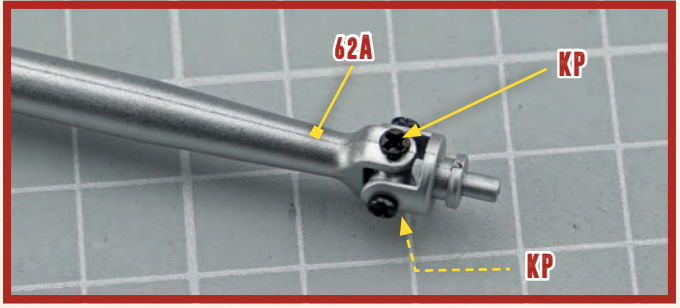

B

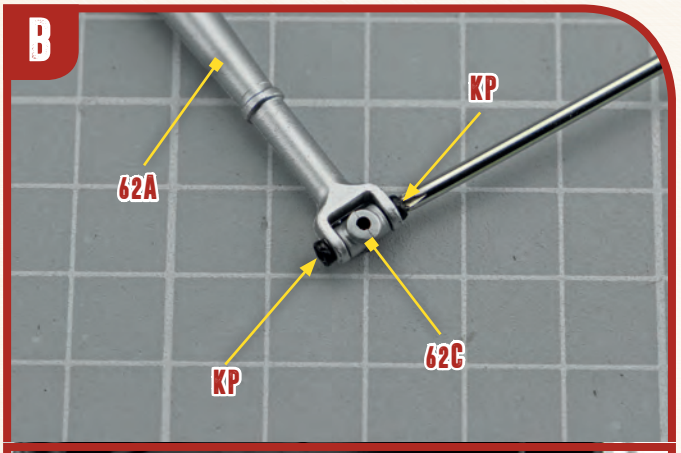

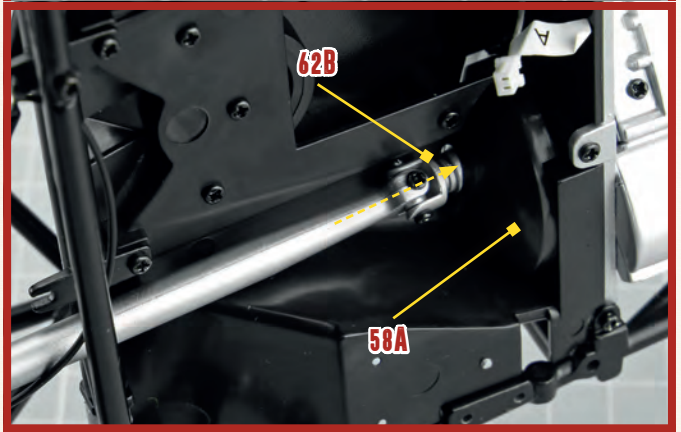

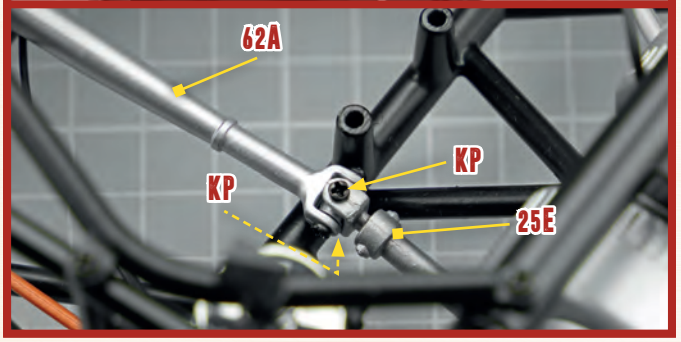

C



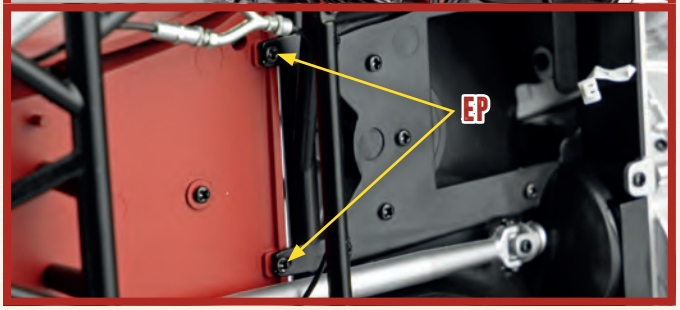

63 PARTS LIST

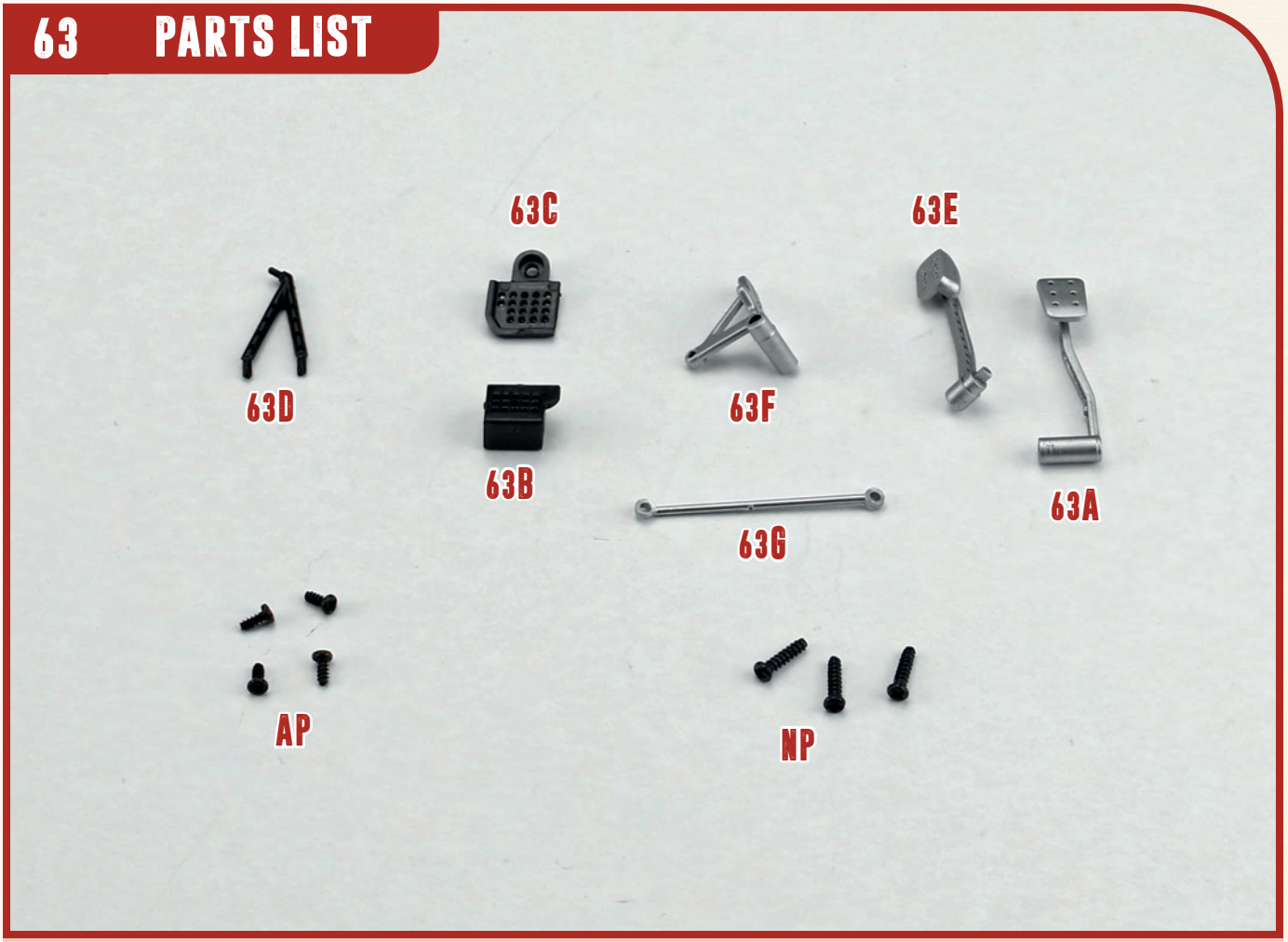

63A Clutch pedal
63B Footrest part A
63C Footrest part B
63D Footrest part C
63E Brake pedal
63F Gas pedal
63G Gas pedal shaft
AP 4 screws (1.7x4mm)
NP 3 screws (2x8mm)

A

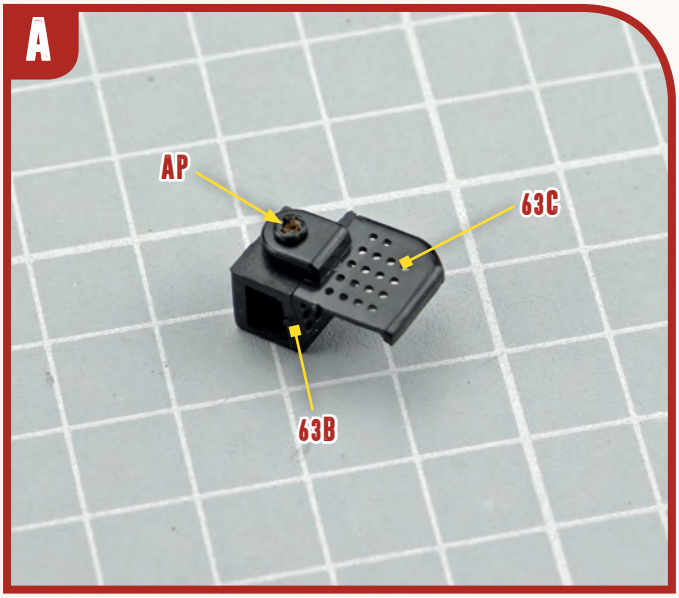

B

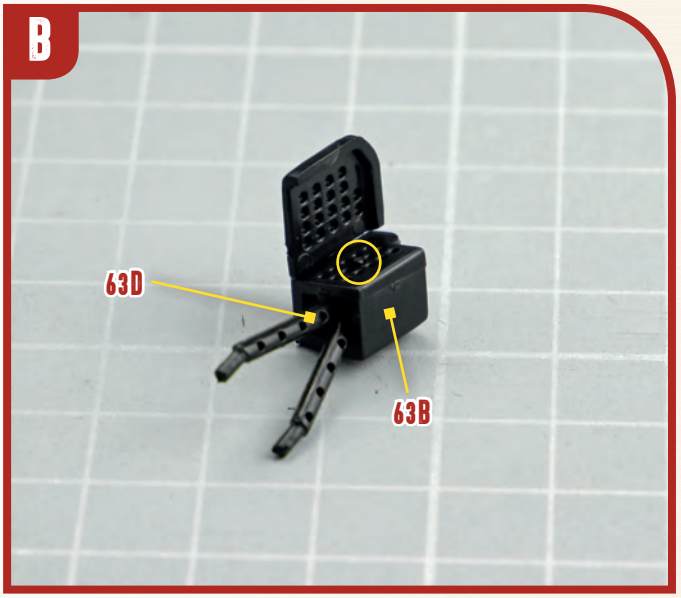

C

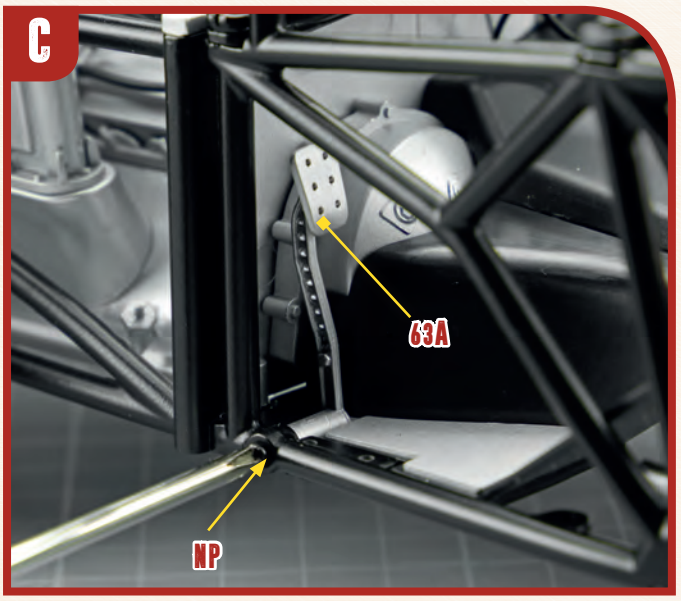

D

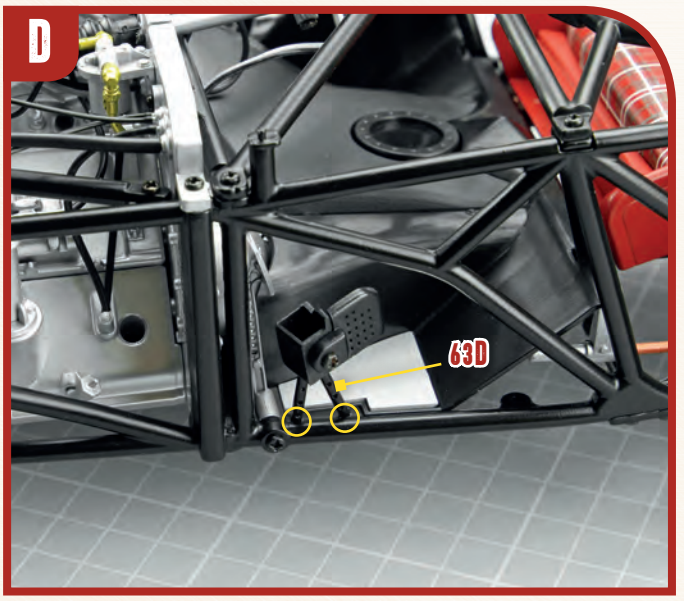

E

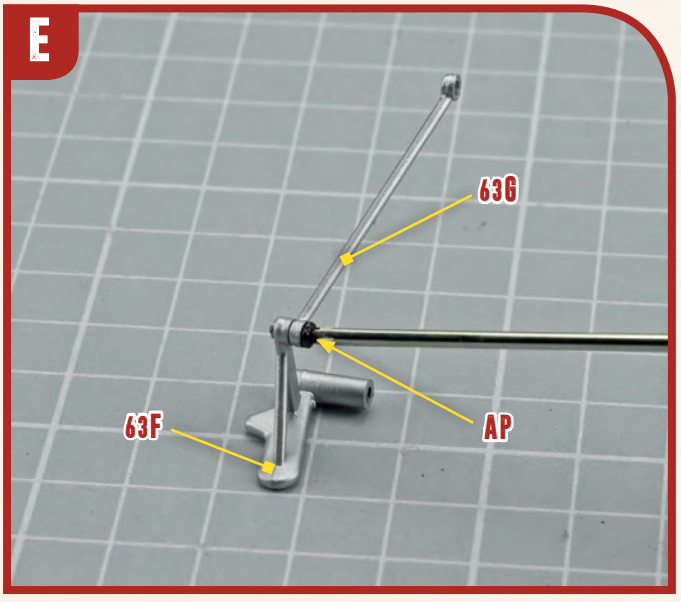

F

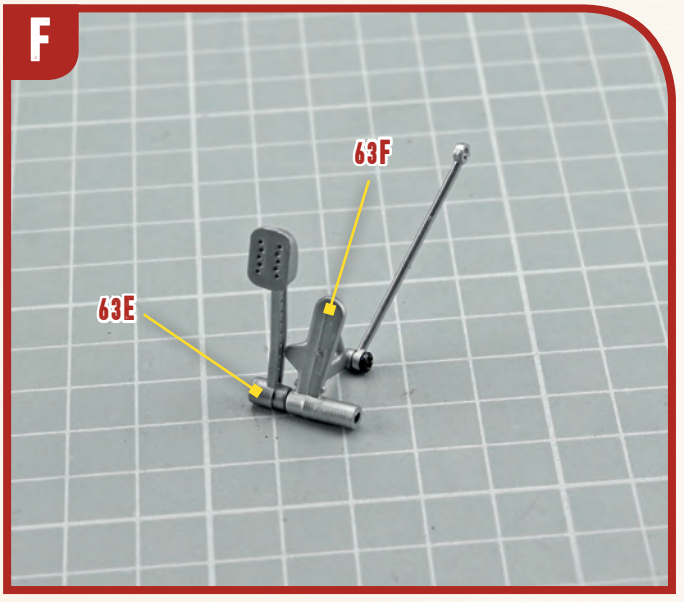

G

Couple gas and brake pedals to chassis

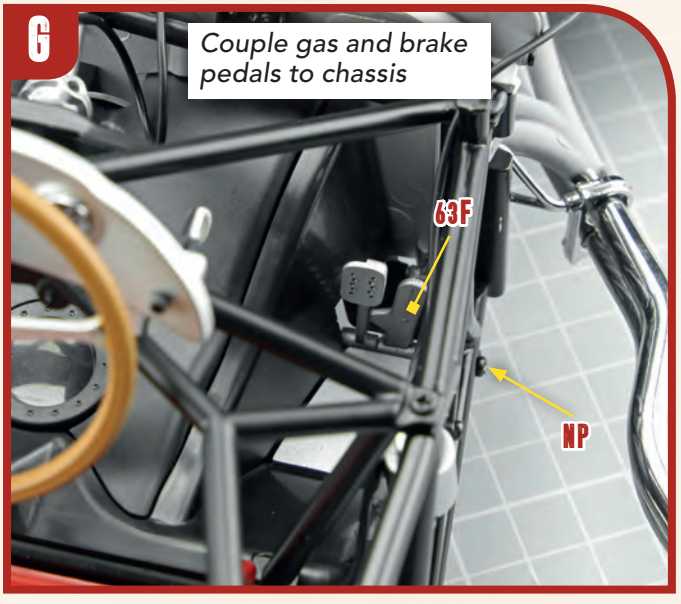

H

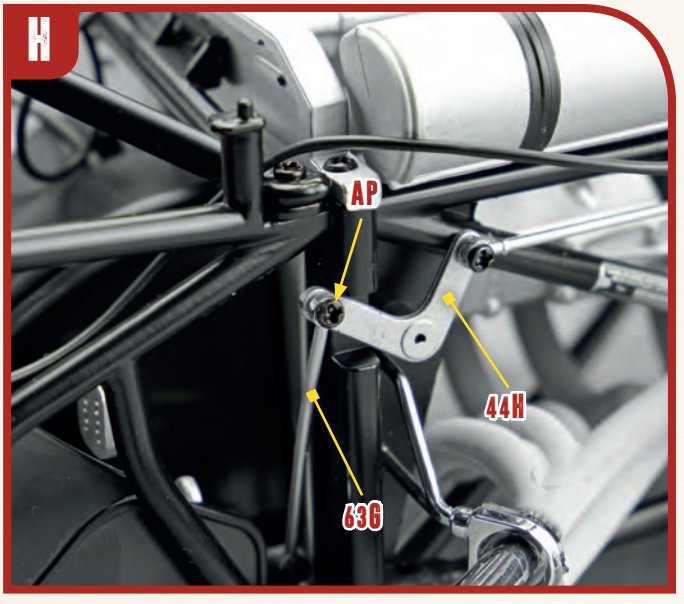

64 PARTS LIST

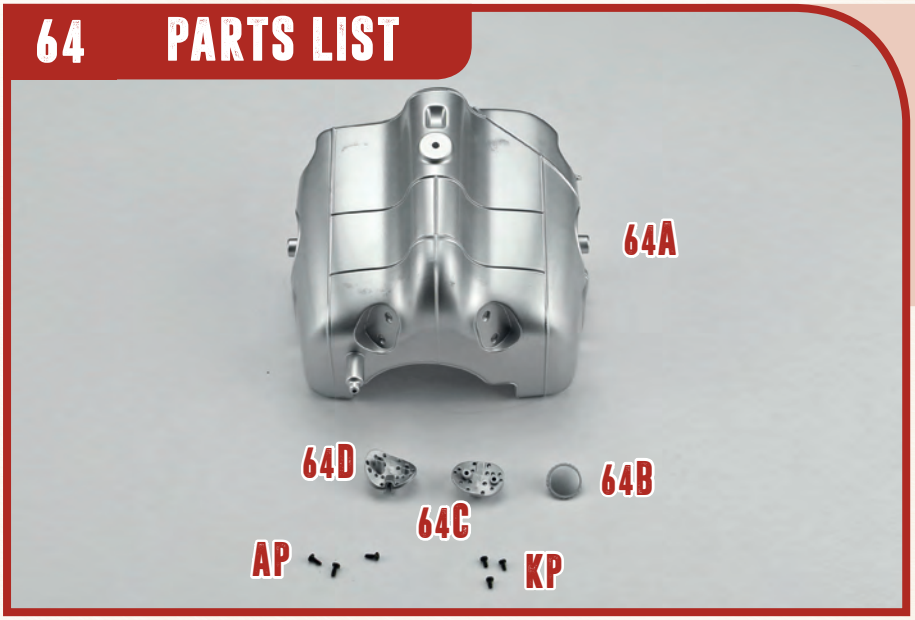

64A	Fuel tank body
64B	Cap
64C	Fuel tank detail 1 (R)
64D	Fuel tank detail 2 (L)
AP	3 screws (1.7x4mm)
KP	3 screws (1.7x3mm)

A

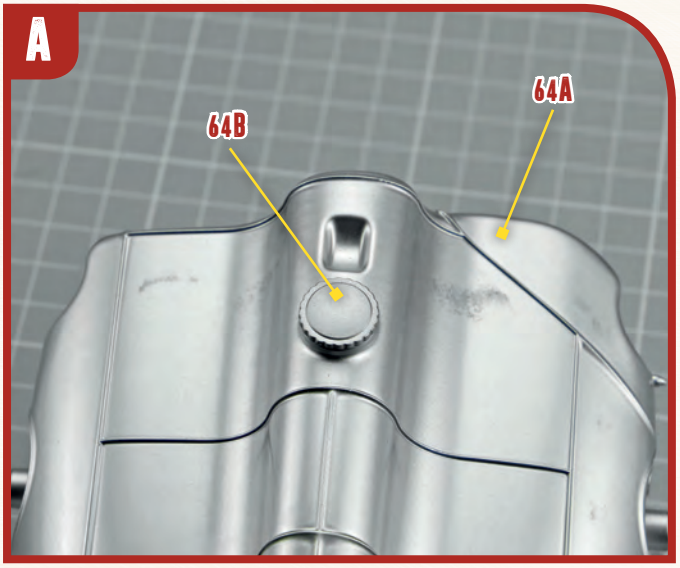

B

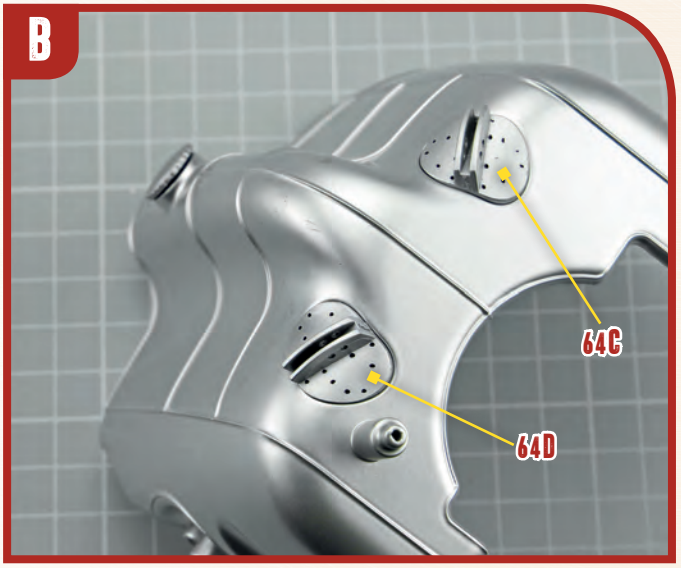

C

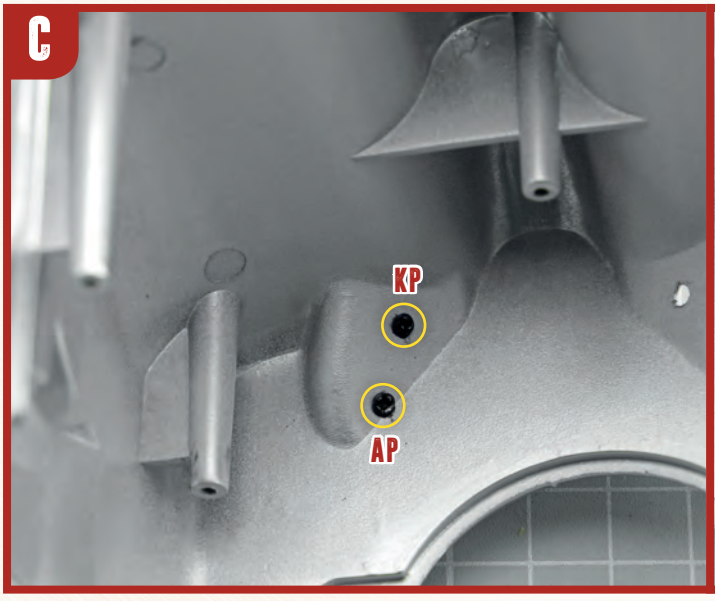

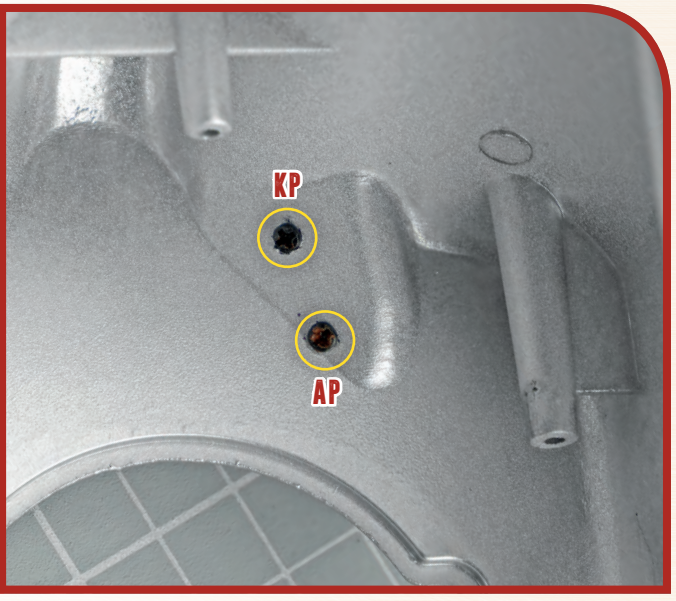

65 PARTS LIST

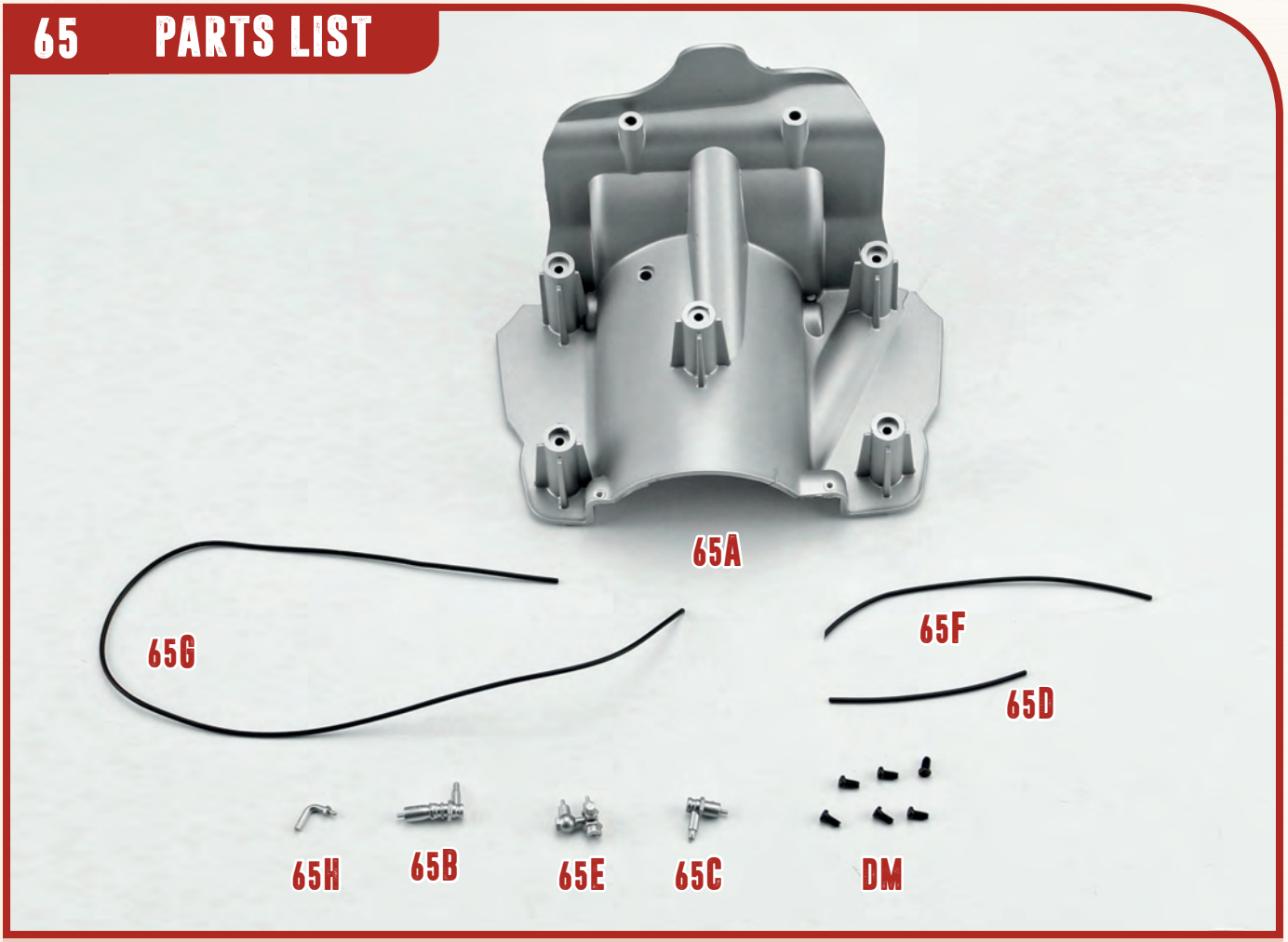

65A Fuel tank bottom
65B Detail 1
65C Detail 2
65D Fuel line 5
65E Detail 3
65F Fuel line 6
65G Fuel line 7
65H Detail 4
DM 6 screws (2x4mm)

A

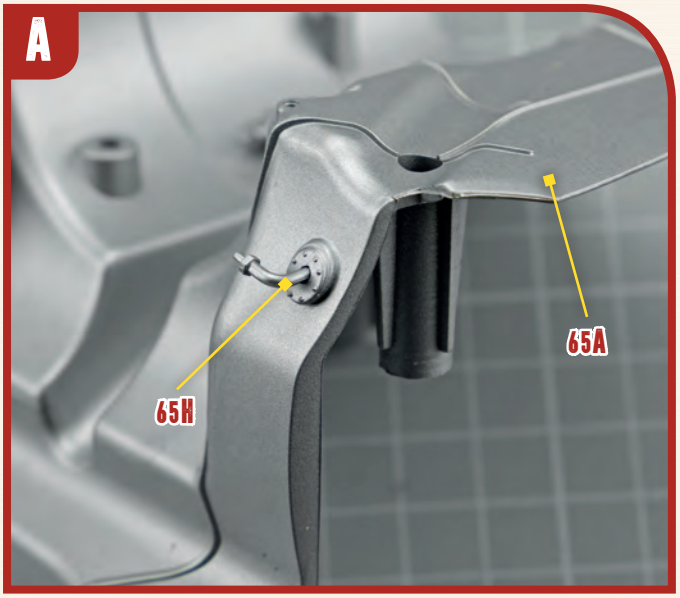

B

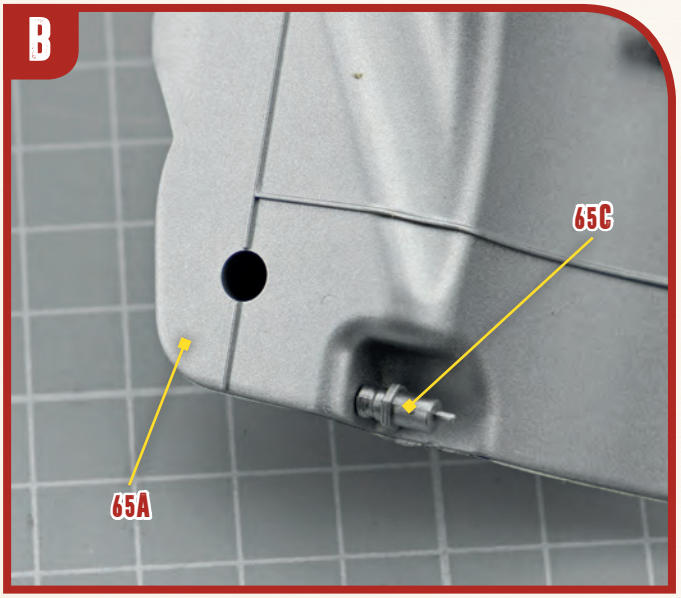

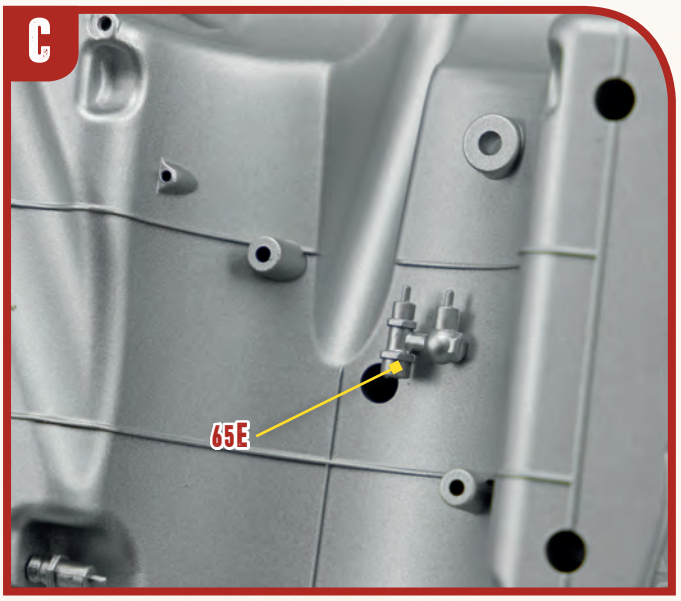
C
65E

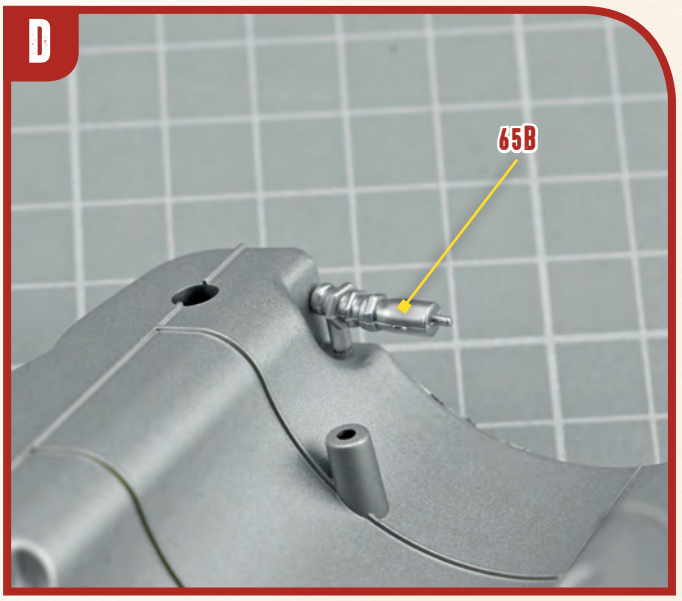
D
65B

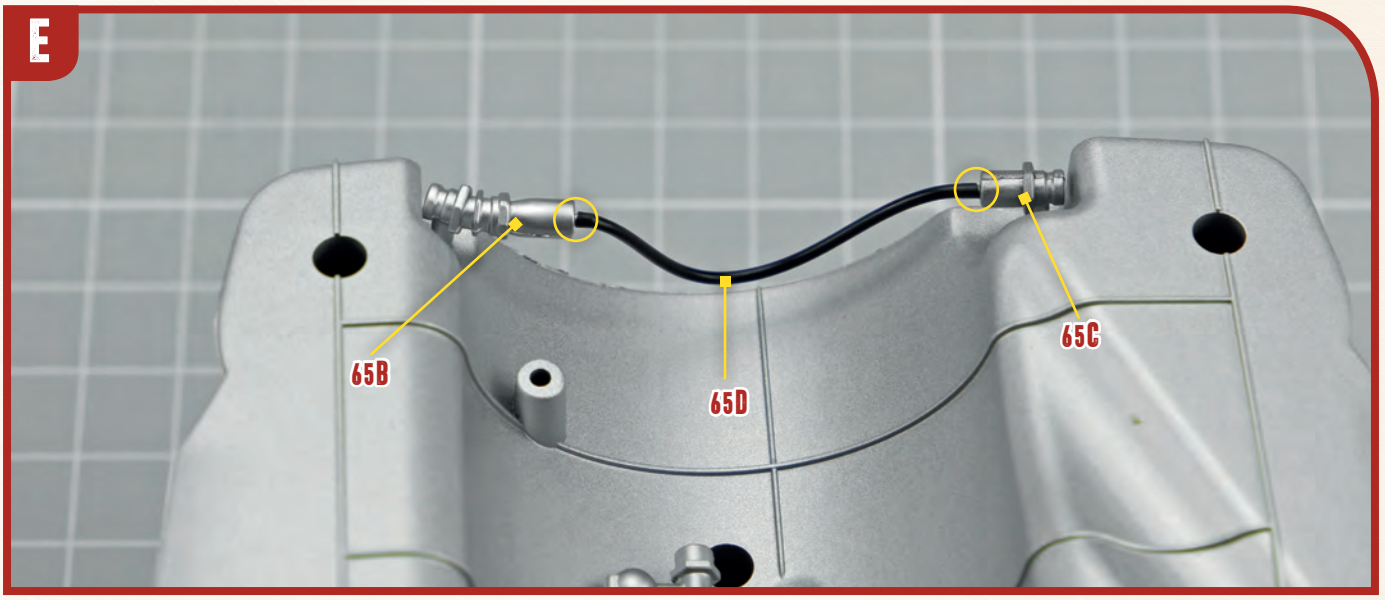
E
65B
65D
65C

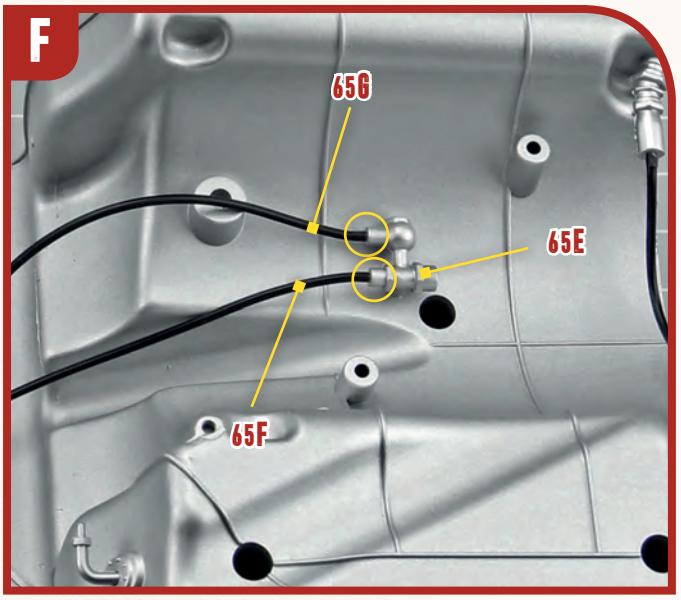
F
65G
65E
65F

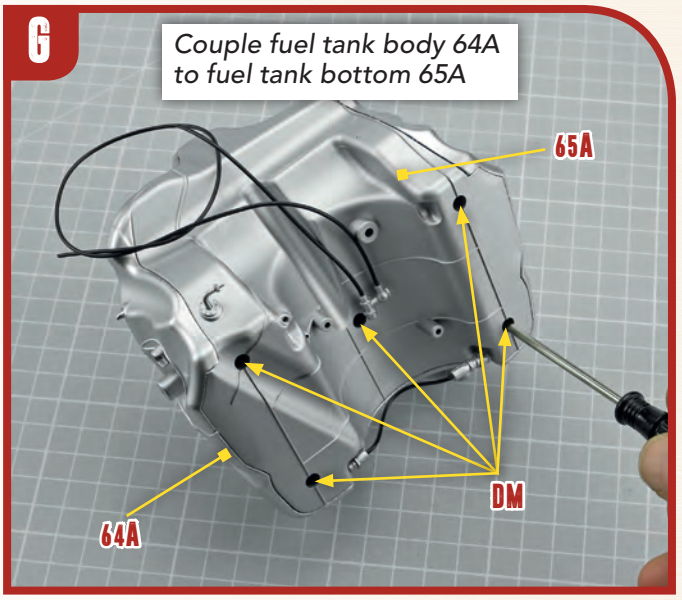
G
Couple fuel tank body 64A to fuel tank bottom 65A
65A
DM
64A

66 PARTS LIST

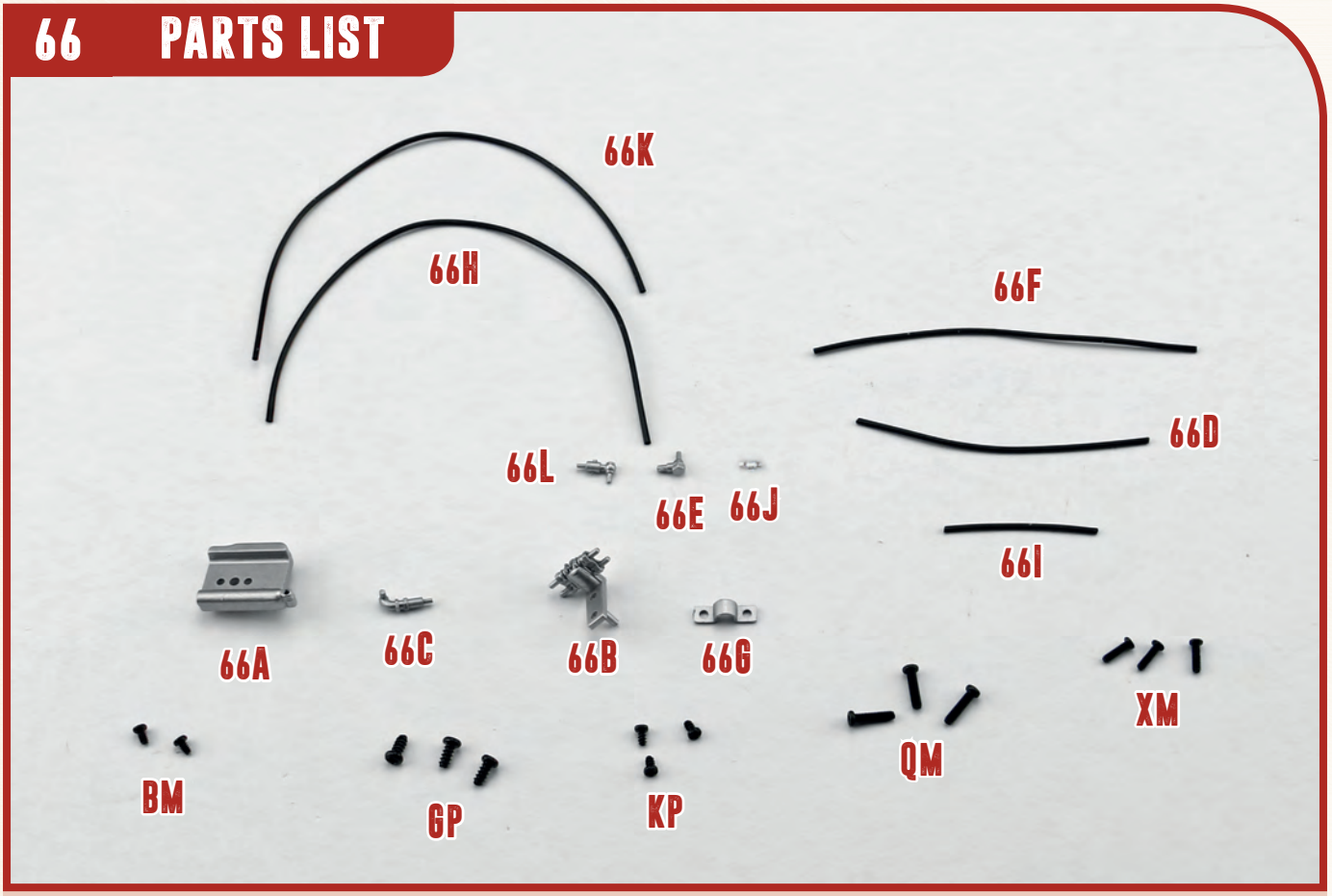

66A Gearbox rear cover
66B Fuel distributor
66C Detail 1
66D Fuel line 8
66E Detail 2
66F Fuel line 9
66G Bracket
66H Fuel line 10
66I Fuel line 11
66J Detail 3
66K Fuel line 12
GP 3 screws (2.3x5mm)
KP 3 screws (1.7x3mm)
BM 2 screws (1.7x3mm)
QM 3 screws (2x8mm)
XM 3 screws (1.5x6mm)

A

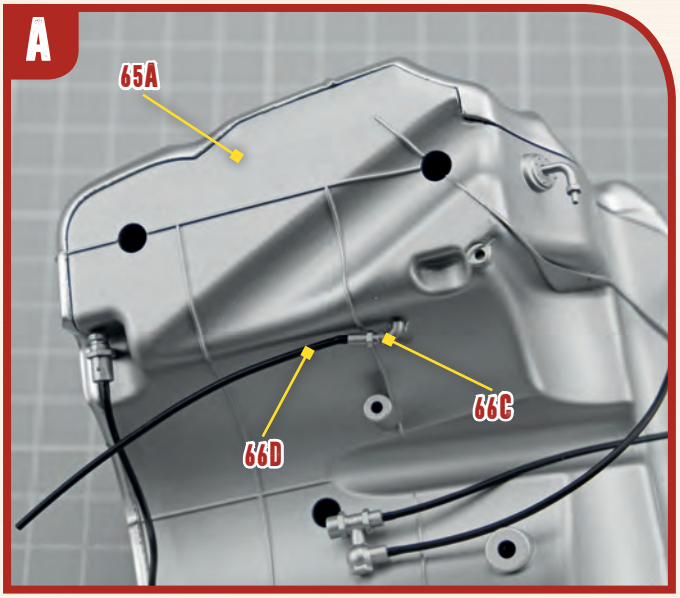

B

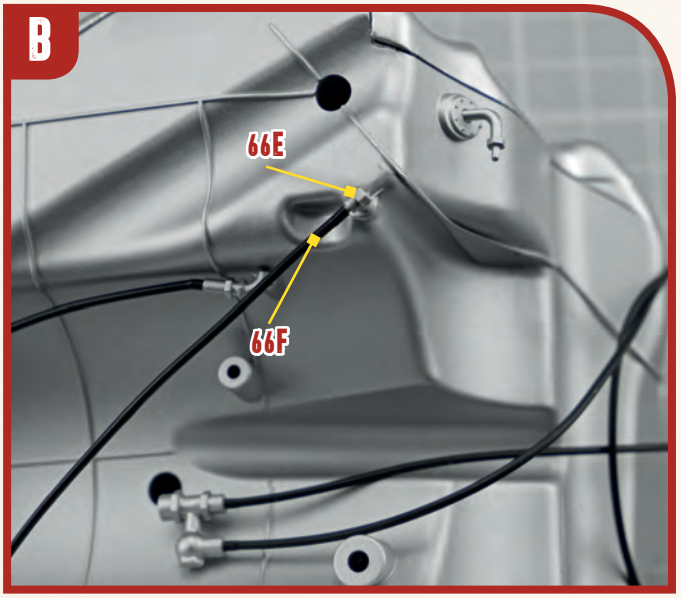

C

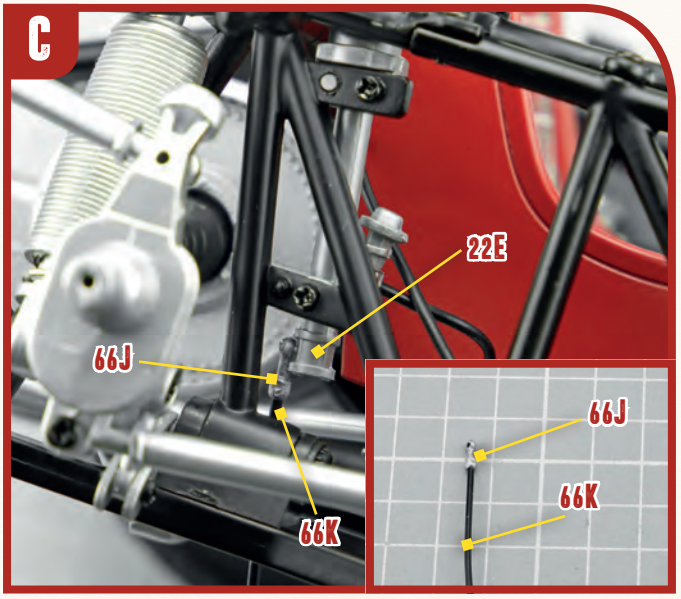

D

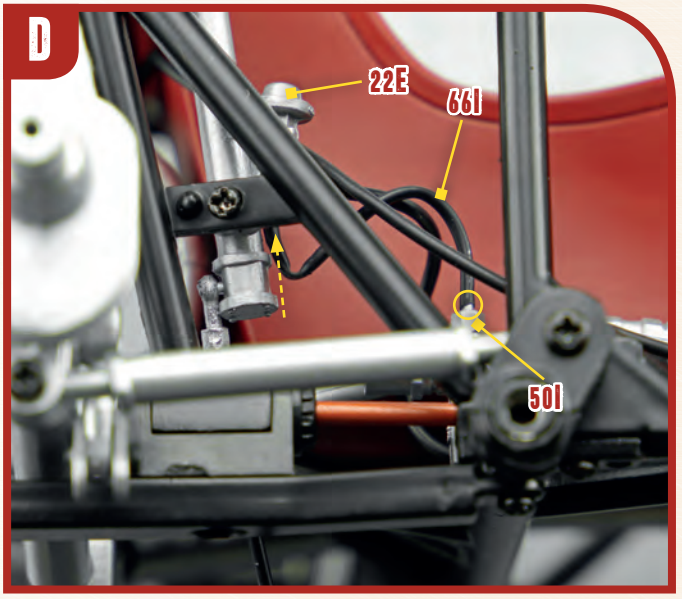

E

Temporarily remove 26G by loosening the highlighted screw

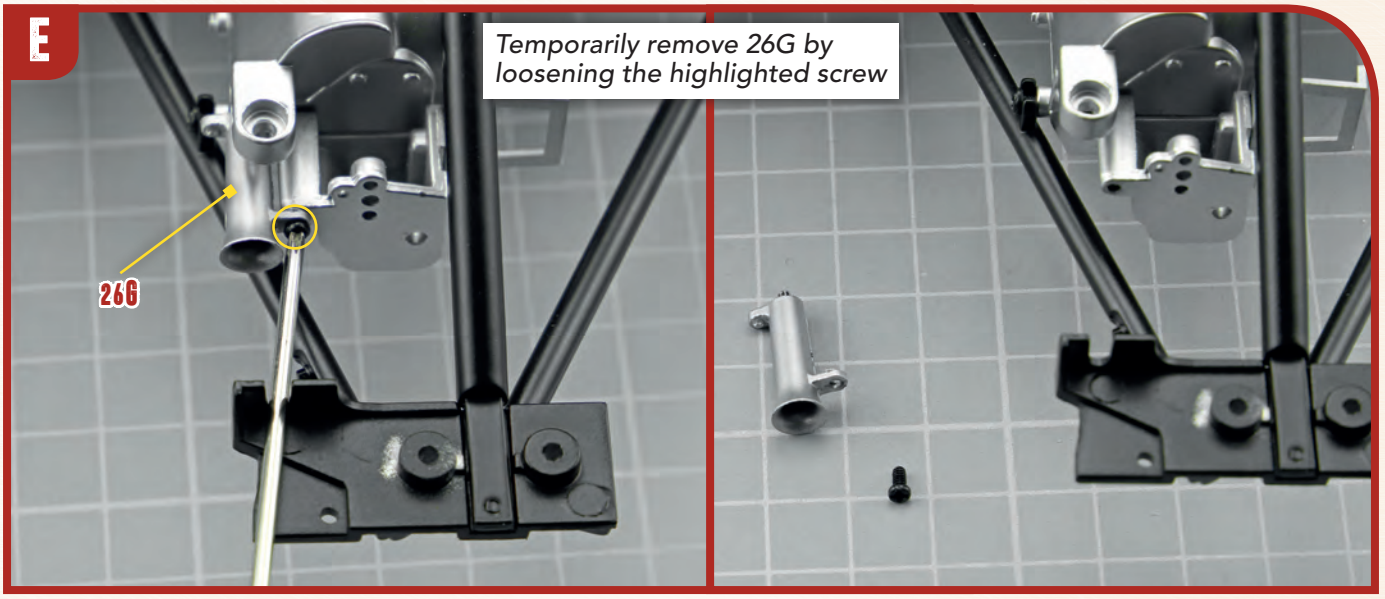

F

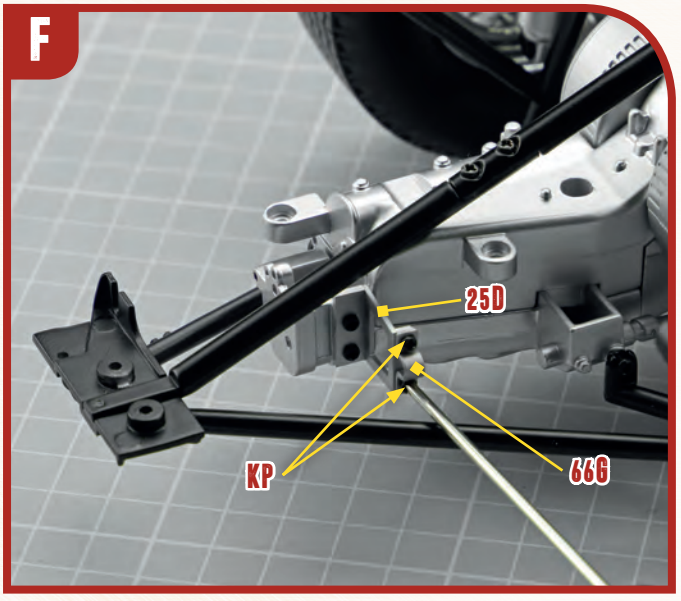

G

Mount fuel tank on chassis

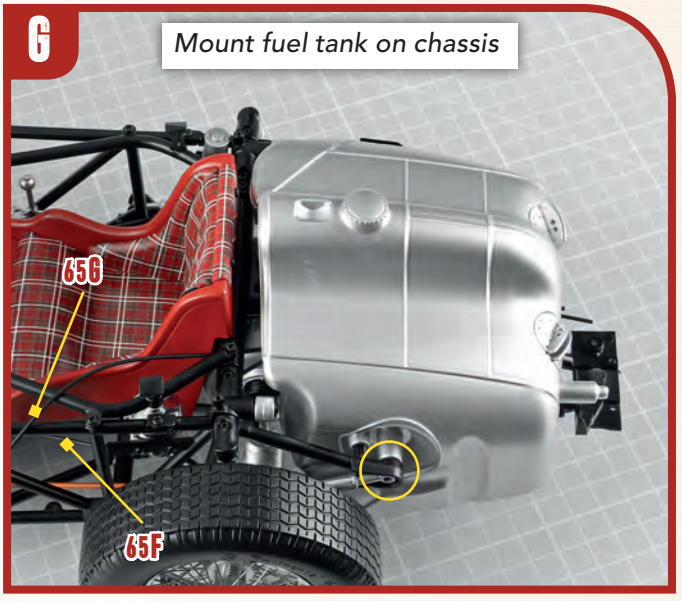

H

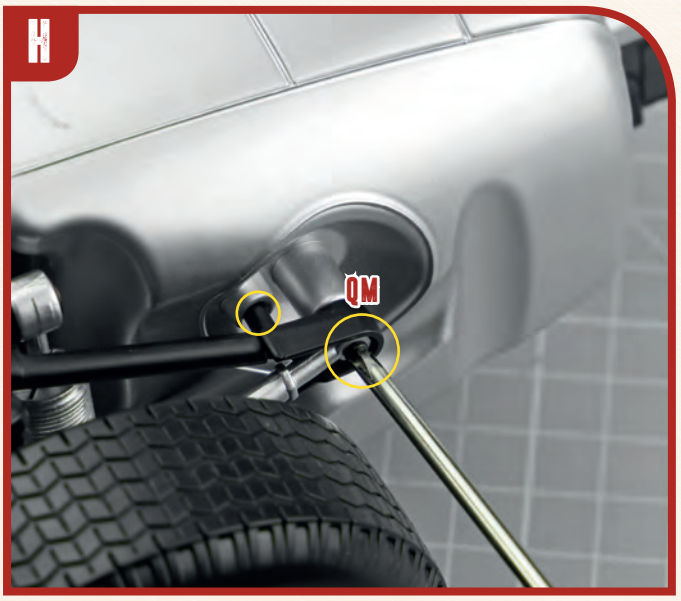

I

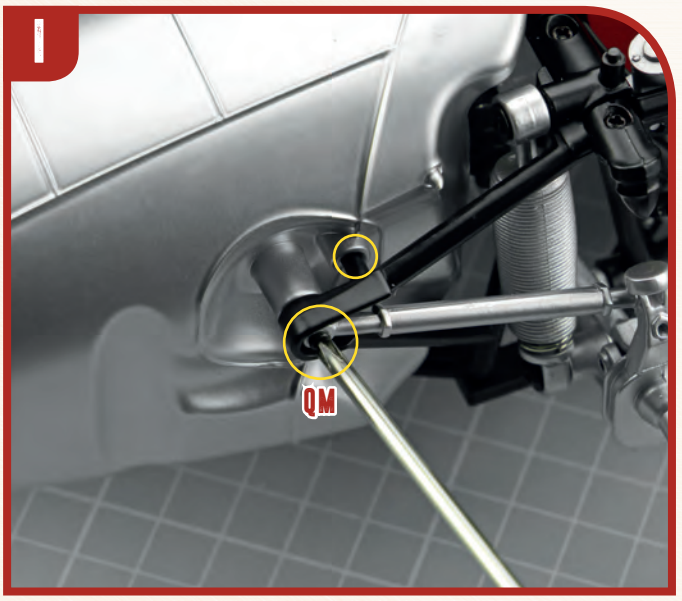

J

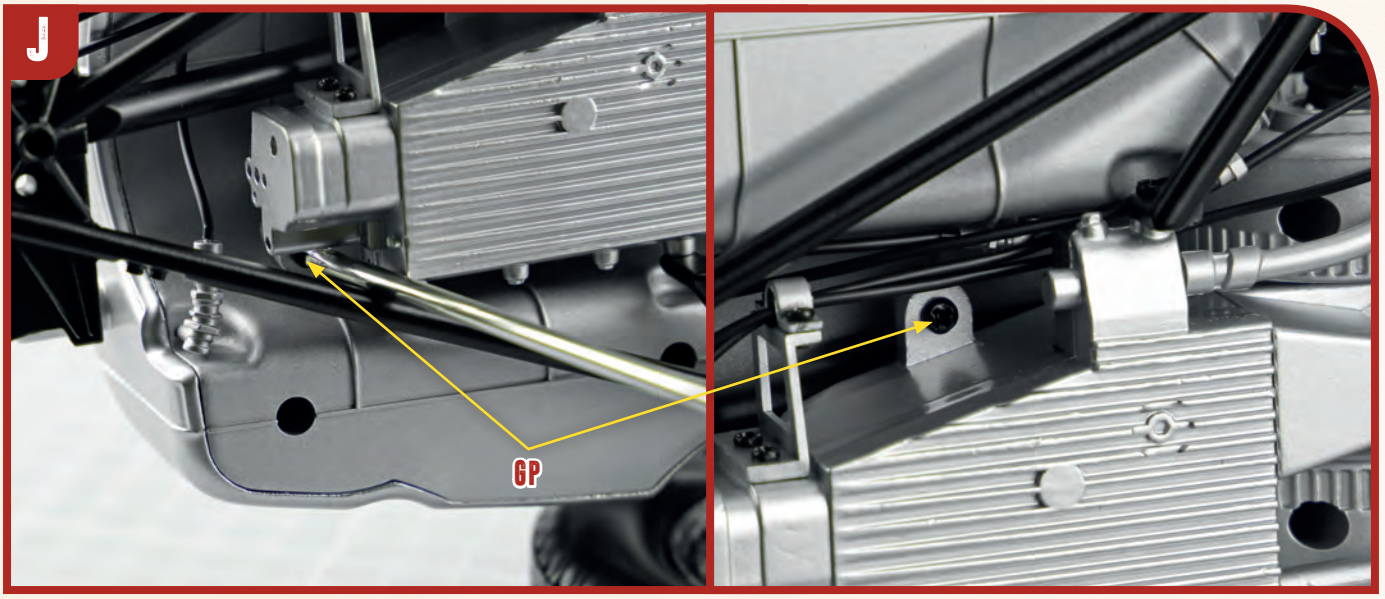

K

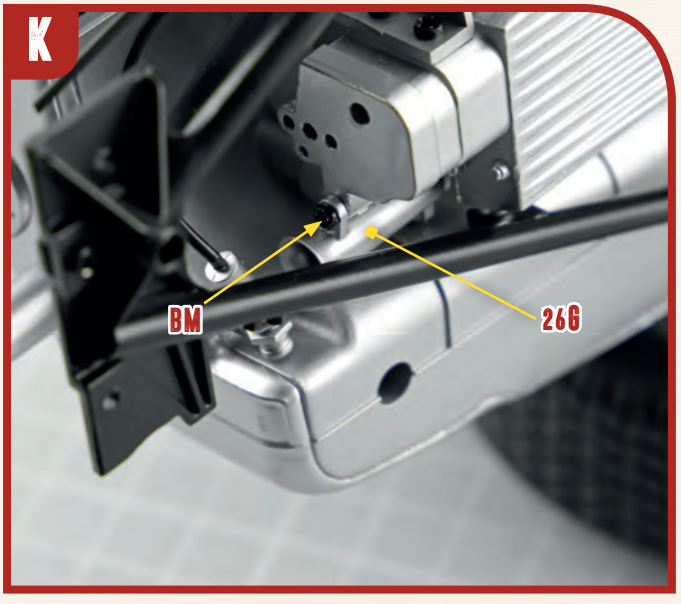

L

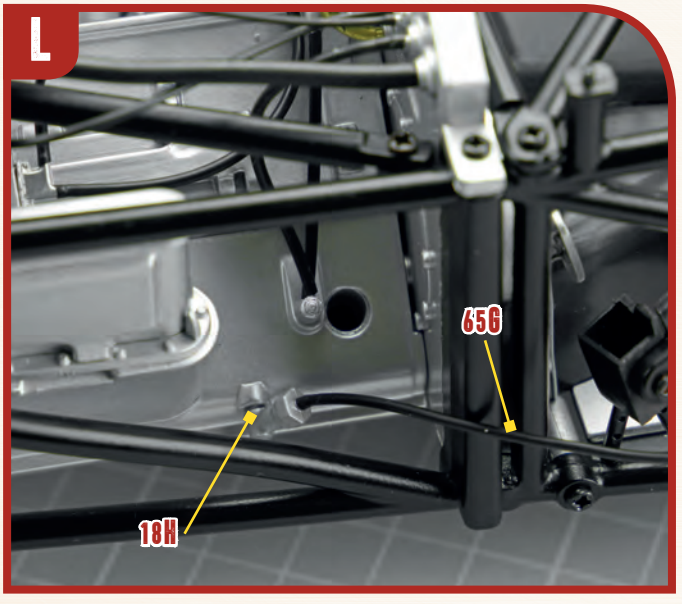

M

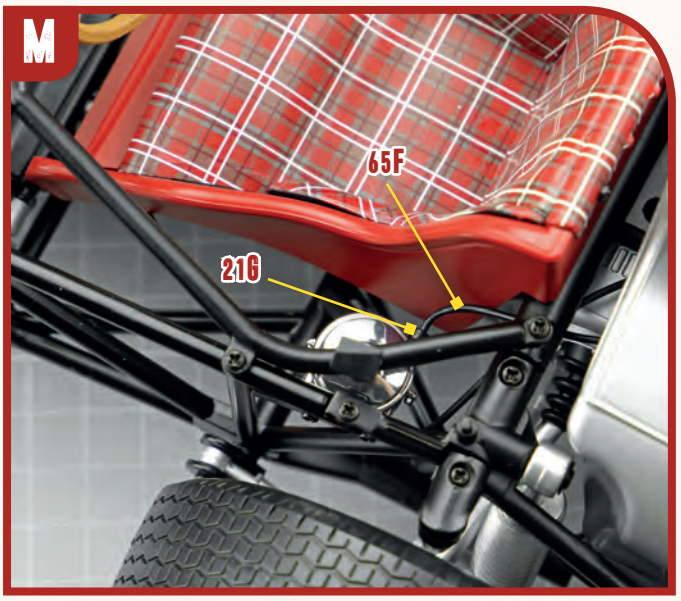
65F
21G

N

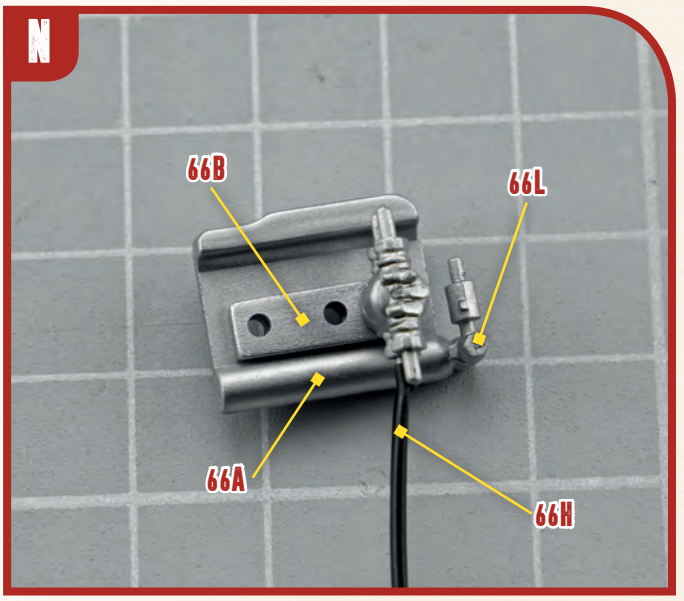
66B
66L
66A
66H

O

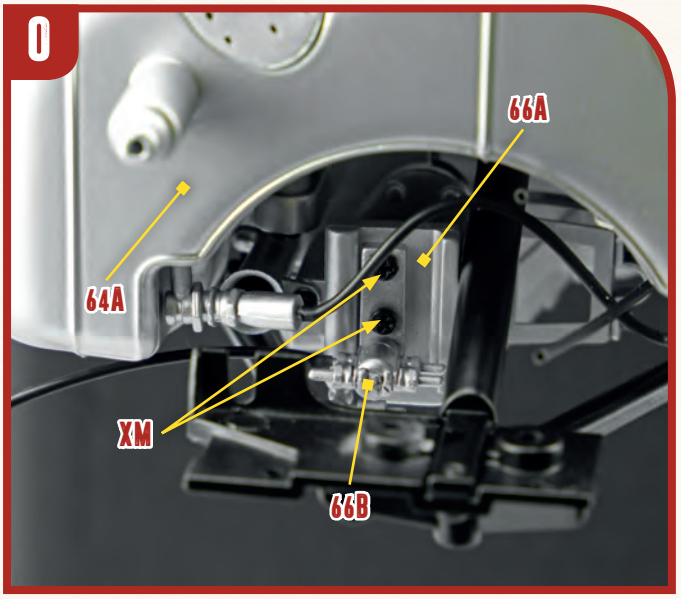
66A
64A
XM
66B

P

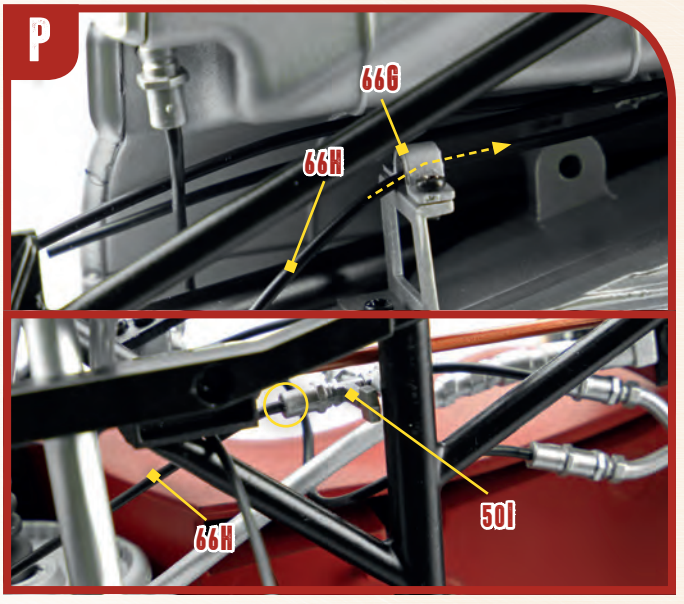
66G
66H
66H
50I

Q

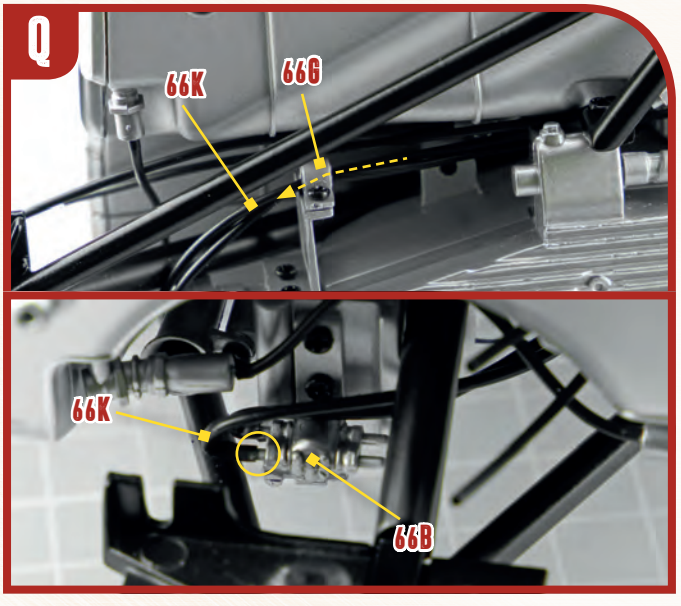
66K
66G
66K
66B

R

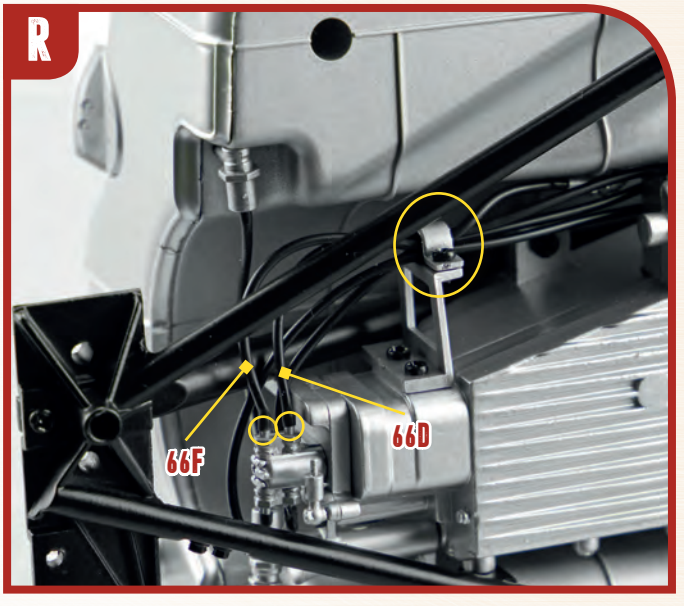
66F
66D

67 PARTS LIST



67A	Oil tank body
67B	Filler cap
67C	Oil tank bottom
67D	Bracket
AP	3 screws (1.7x4mm)
BP	4 screws (2x5mm)
KP	2 screws (1.7x3mm)

A

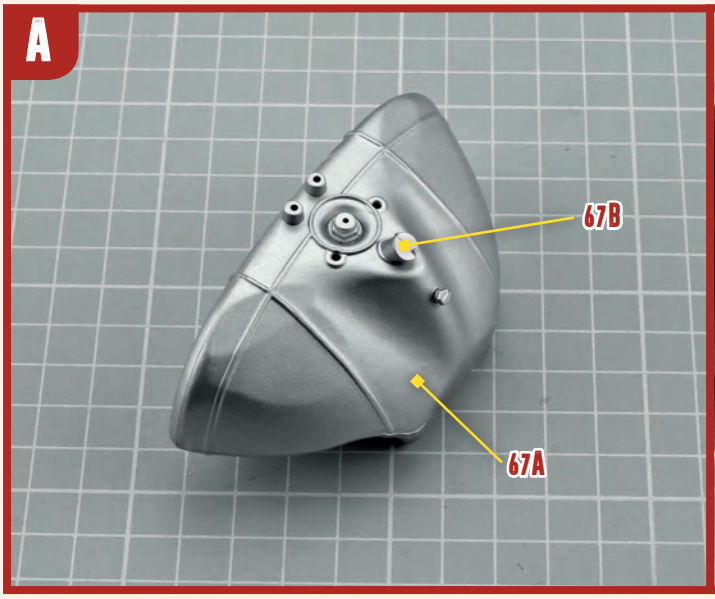

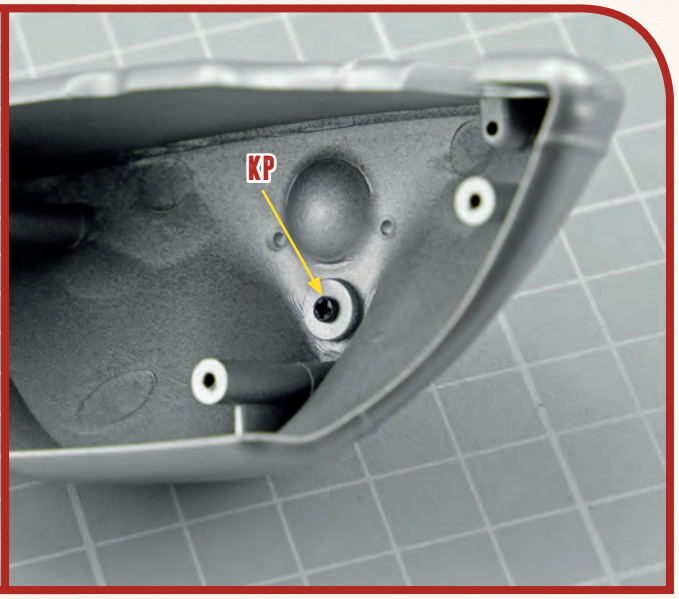

B

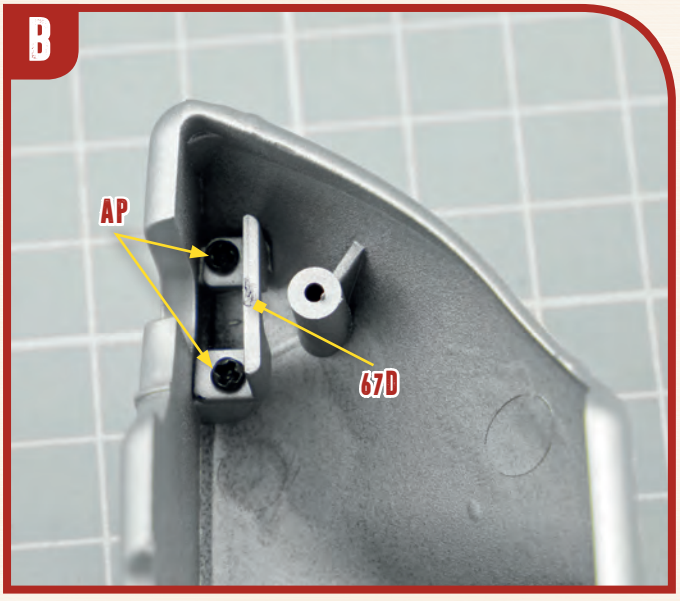

C

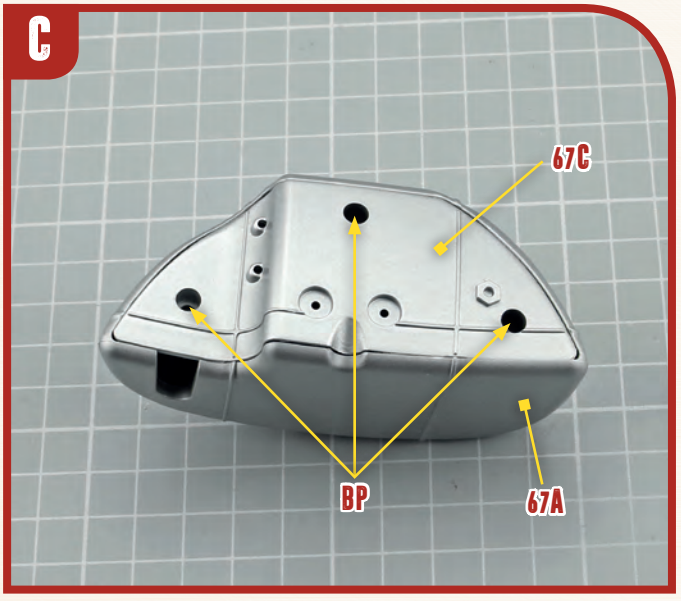

68 PARTS LIST

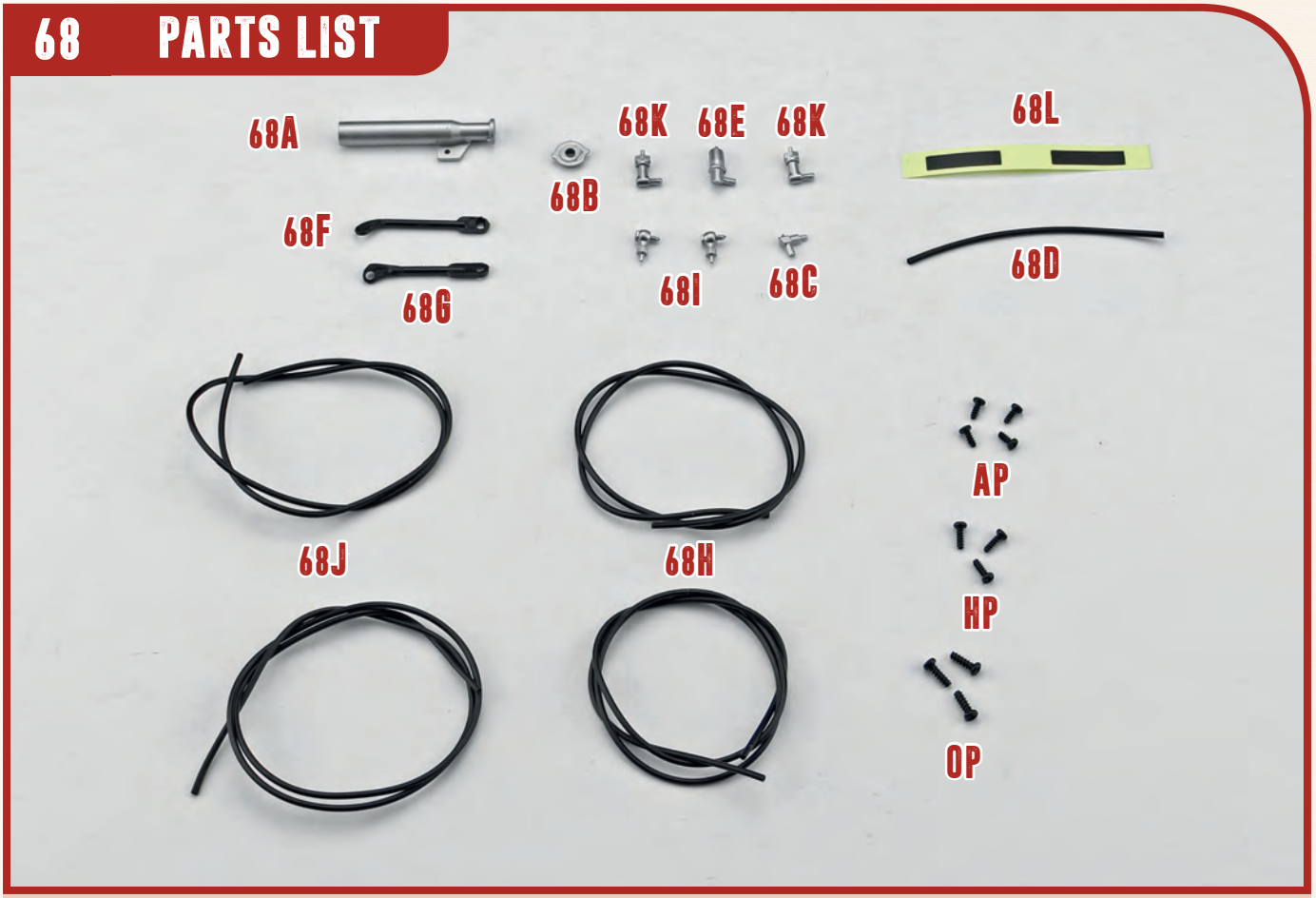

68A Shaft part A
68B Shaft part B
68C Detail 1
68D Tube 1
68E Detail 2
68F Bracket 1 (L)
68G Bracket 2 (R)
68H Tubes 2 (x2)
68I Details 3 (x2)
68J Tubes 3 (x2)
68K Details 4 (x2)
68L Tapes (x2)

AP 4 screws (1.7x4mm)
HP 3 screws (1.7x5mm)
OP 3 screws (2x7mm)

A

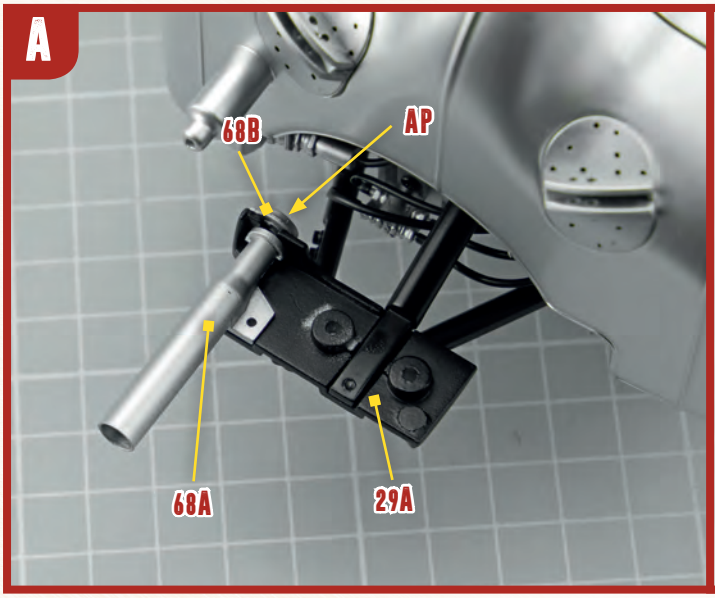

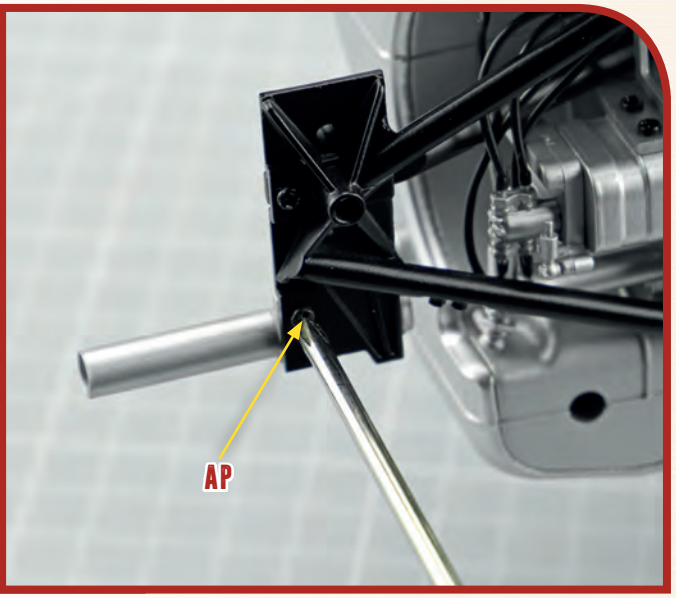

C

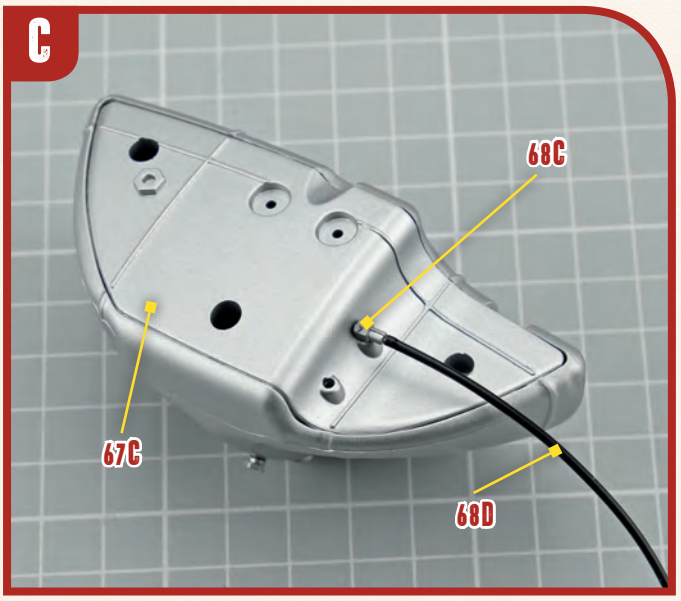
68C
67C
68D

D

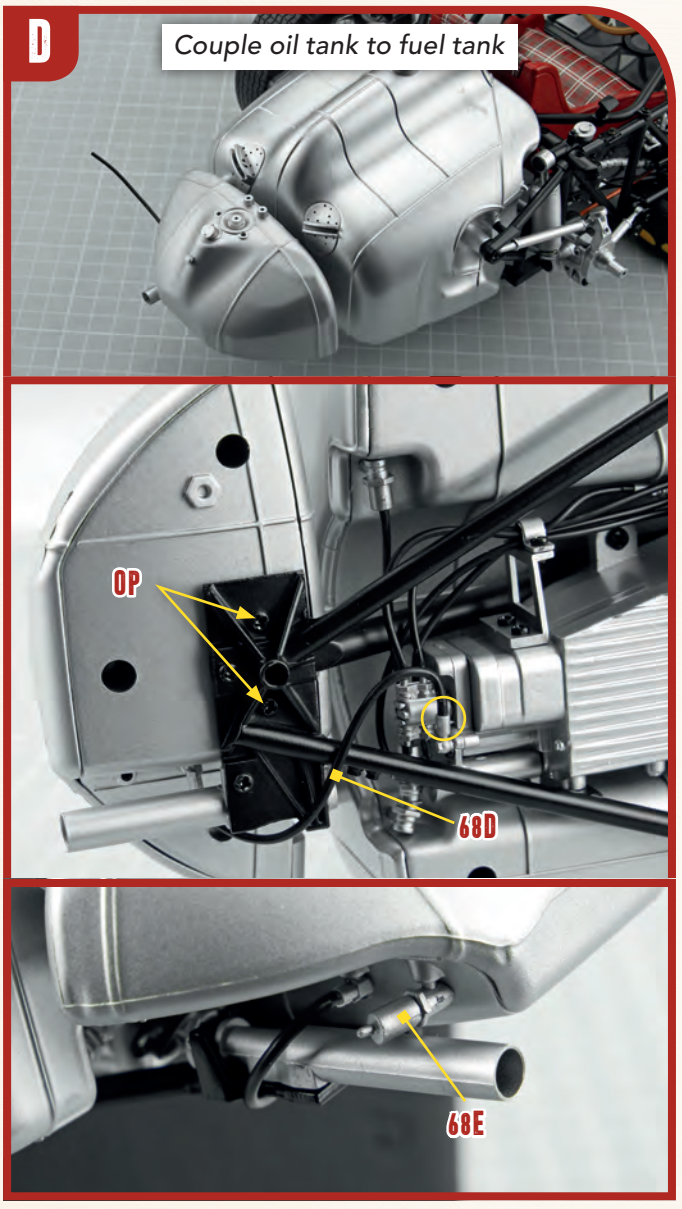
Couple oil tank to fuel tank
OP
68D
68E

E

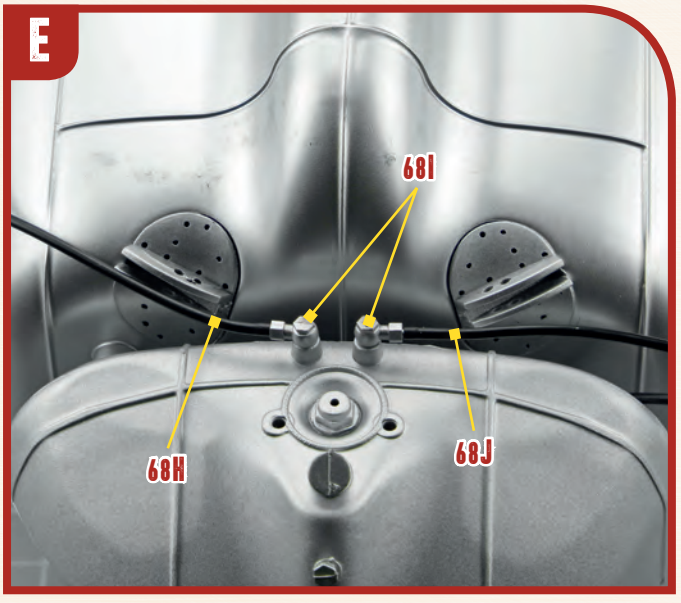
68I
68H
68J

F

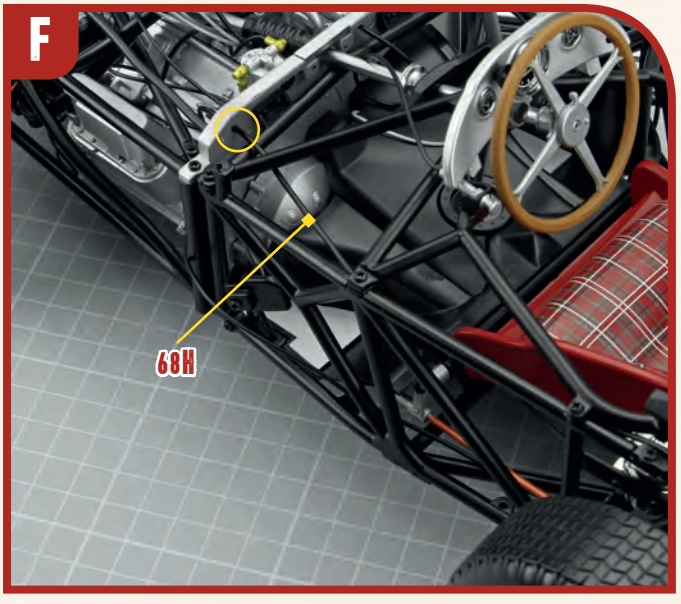
68H

G

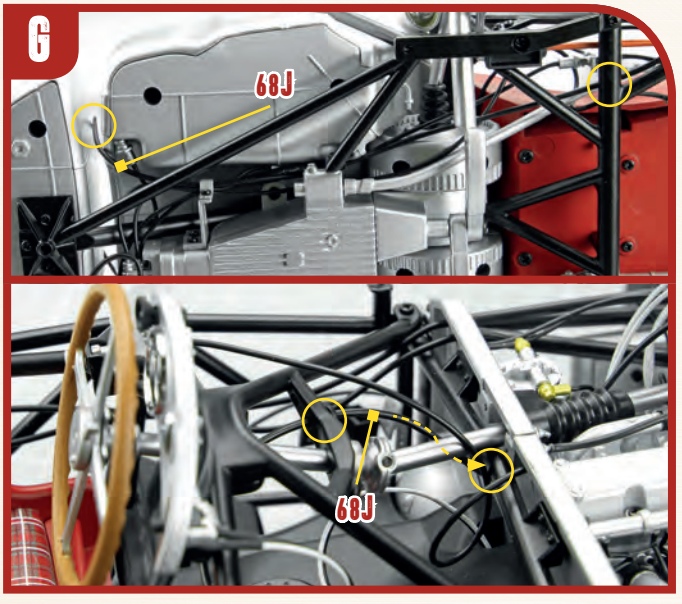
68J
68J

H

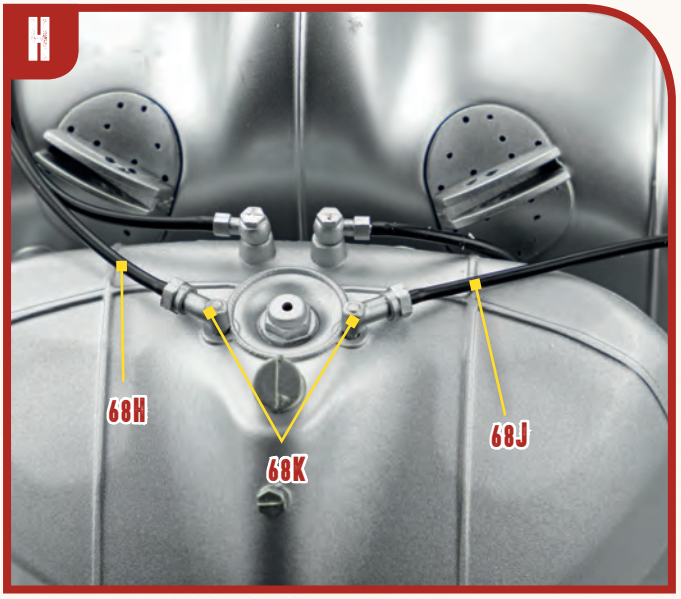

I

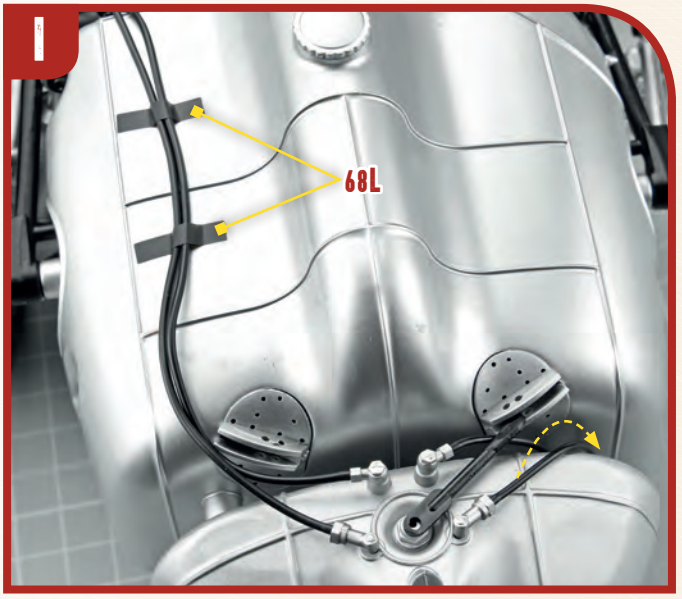

J

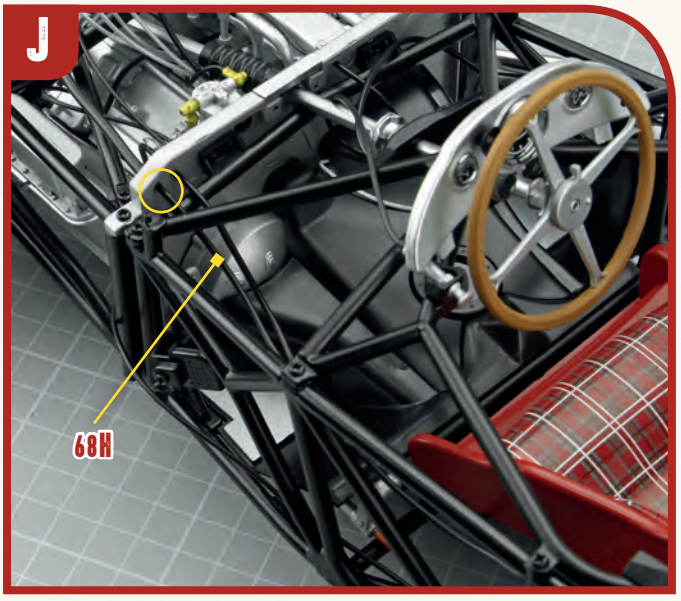

K

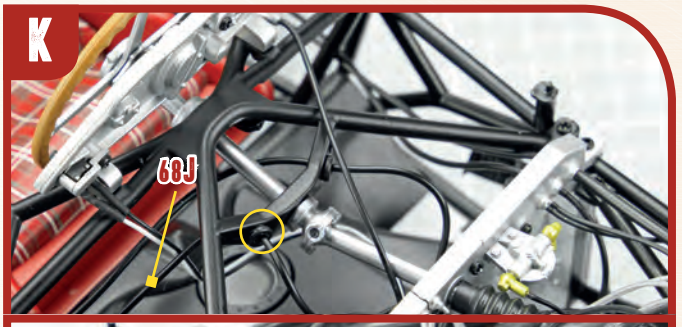

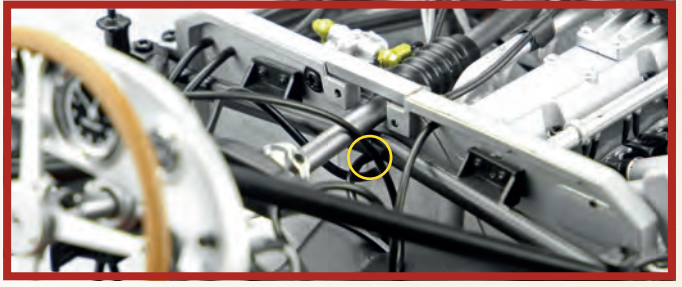

L

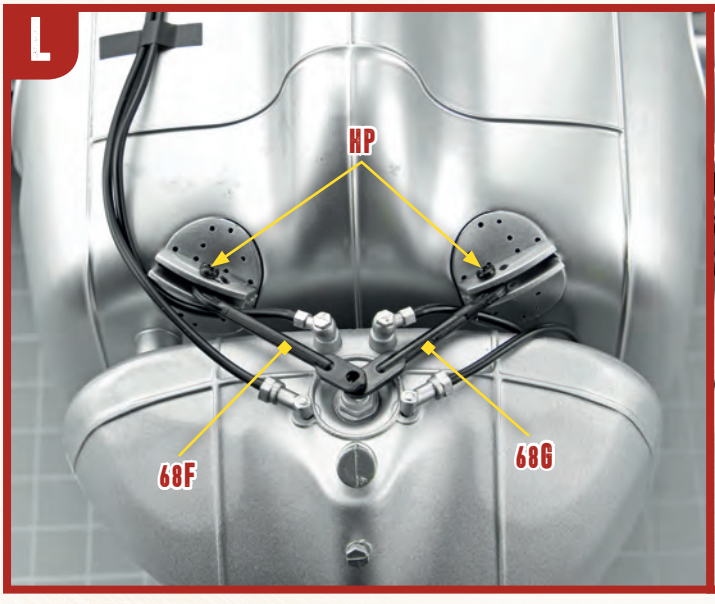

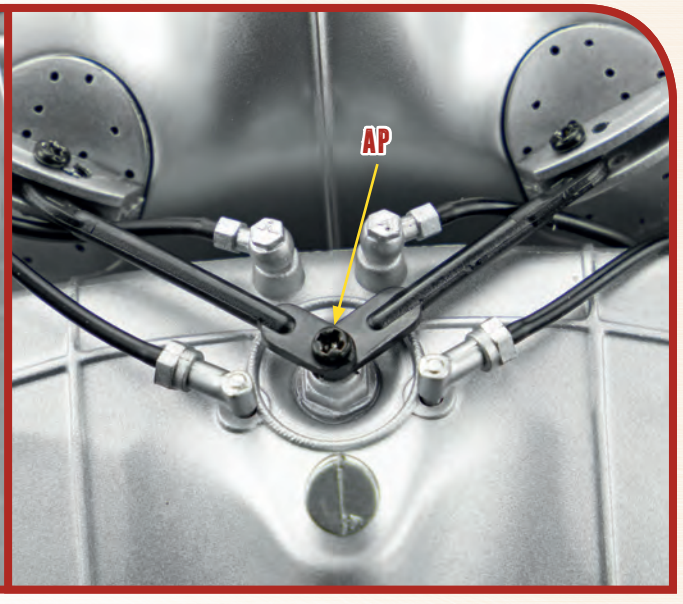

69 PARTS LIST

REGULAR ASSEMBLY

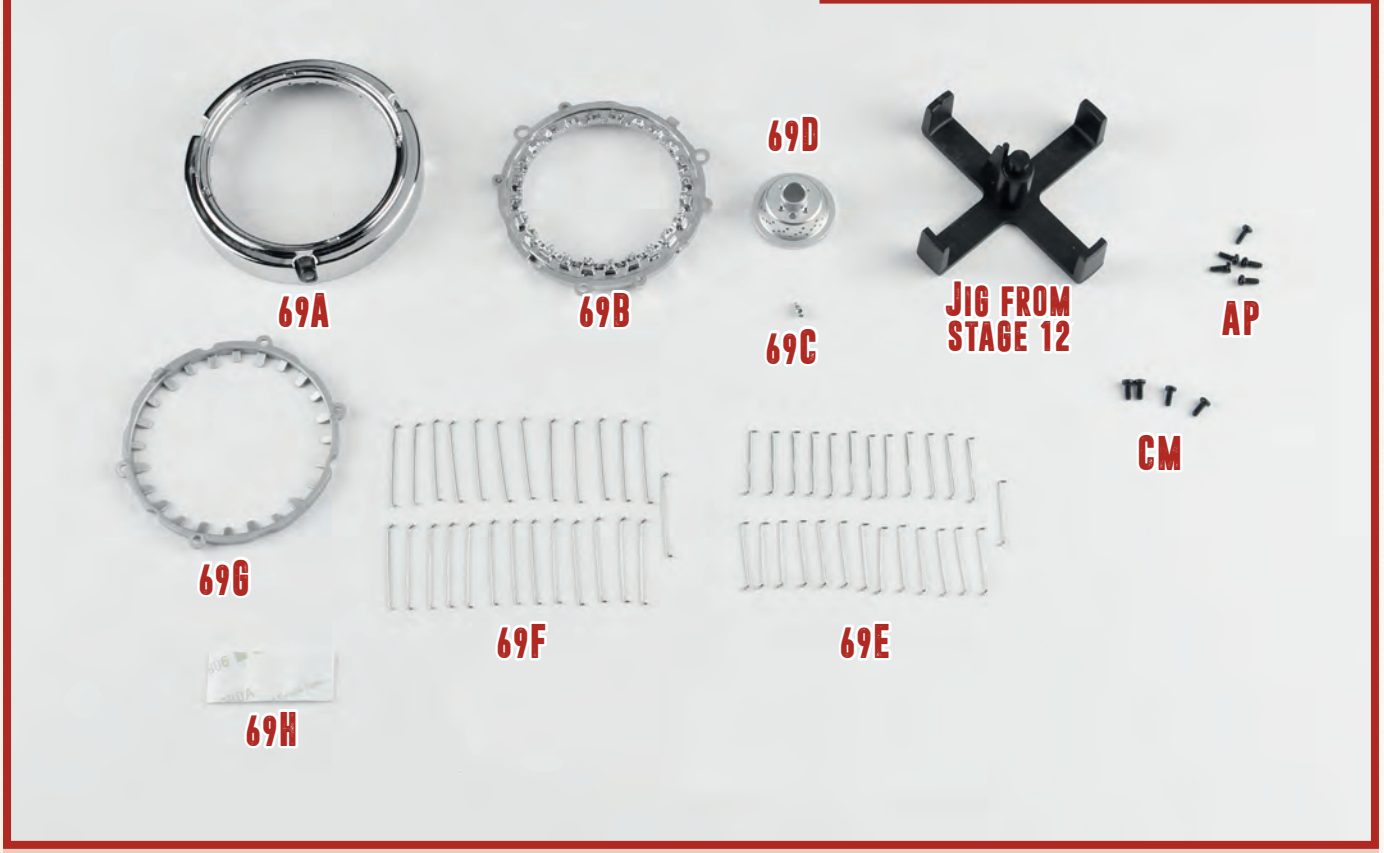

69A Outer rim
69B Central ring 1
69C Inflation valve
69D Hub 1
69E Spokes 1
69F Spokes 2
69G Central ring 2
69H Double-sided tape
AP 5 screws (1.7x4mm)
CM 4 screws (1.7x4mm)

A

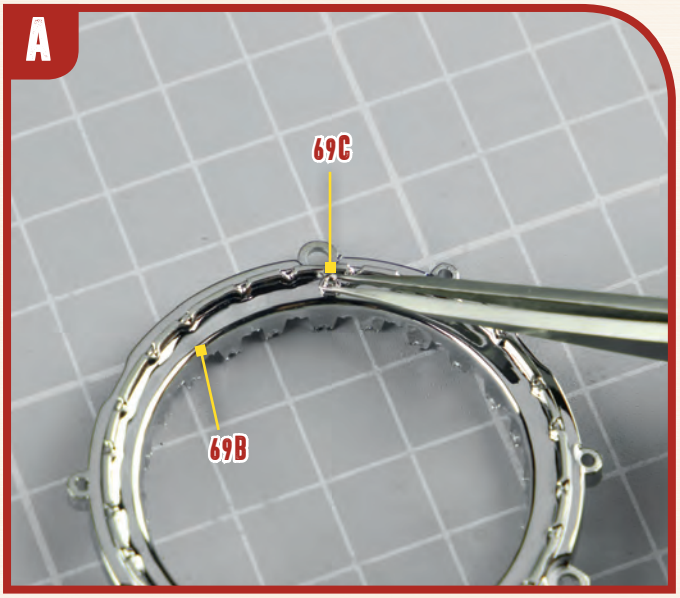

B

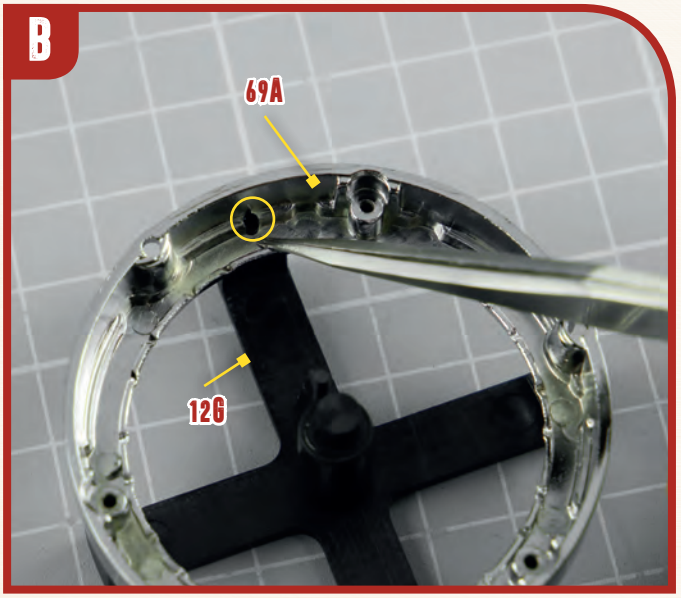

C

Apply 24 pieces of double-sided tape 69H to 69A's inner profile and tear off their top sheets.

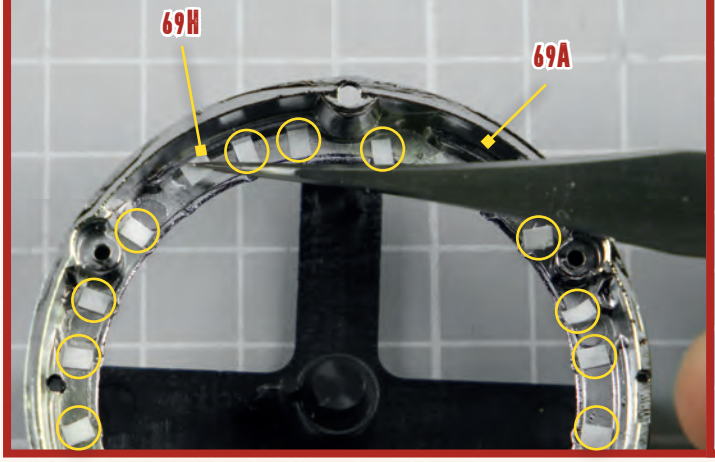

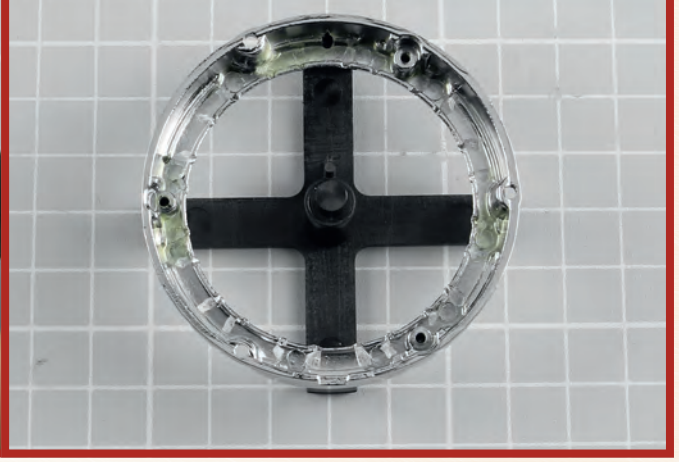

D

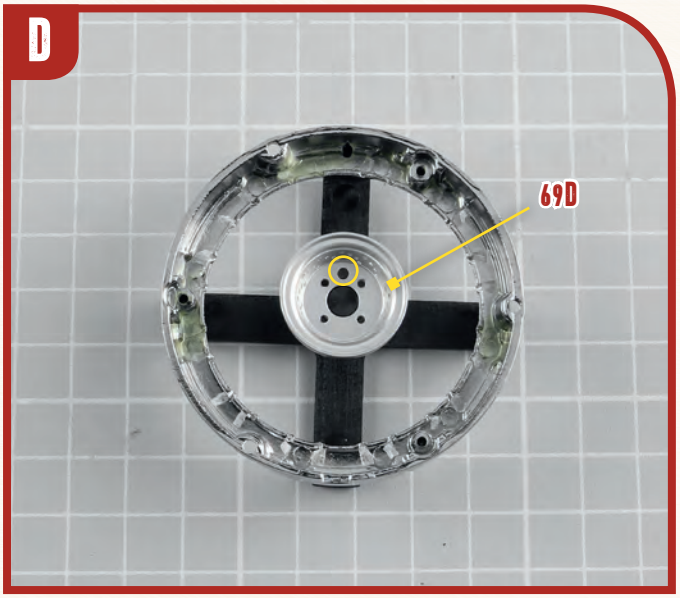

E

Insert 1 spoke 69F through a hole in 69D's first level (counting from the bottom).

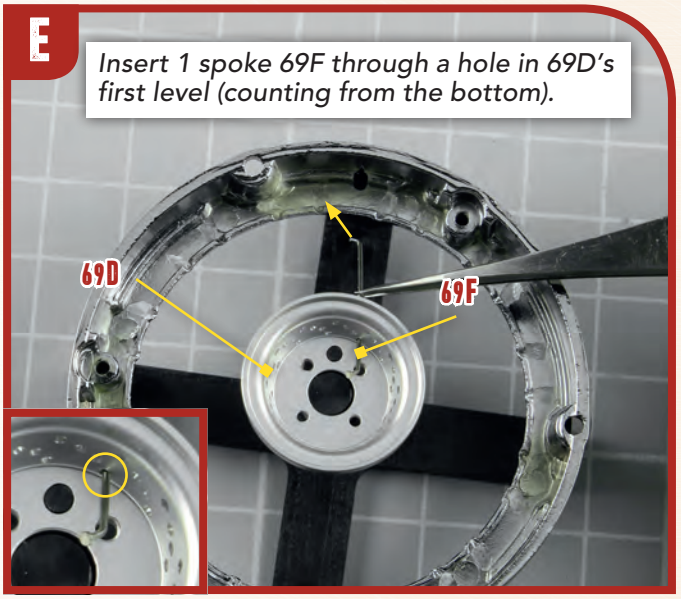

F

Repeat the process with other 11 spokes 69F.

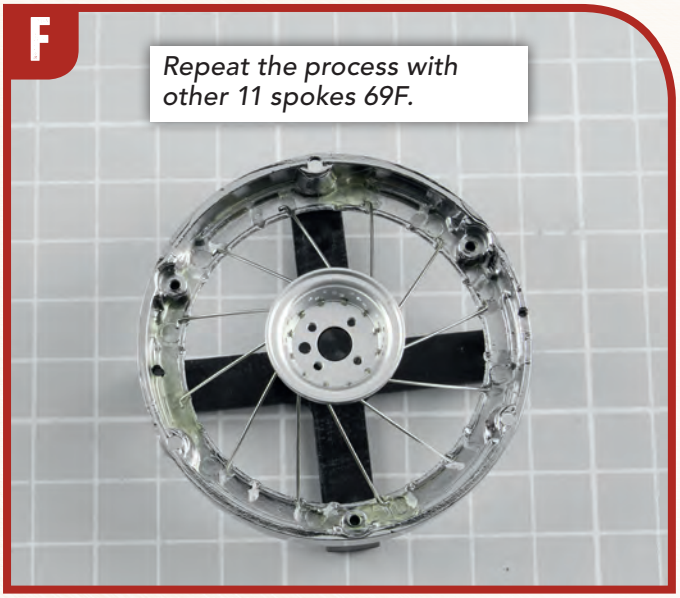

G

Insert 12 spokes 69F through 69D's third level of holes.

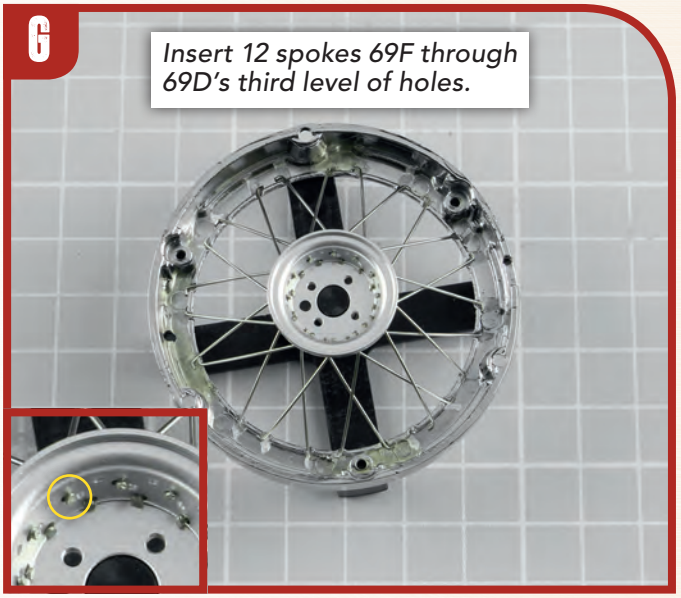

H

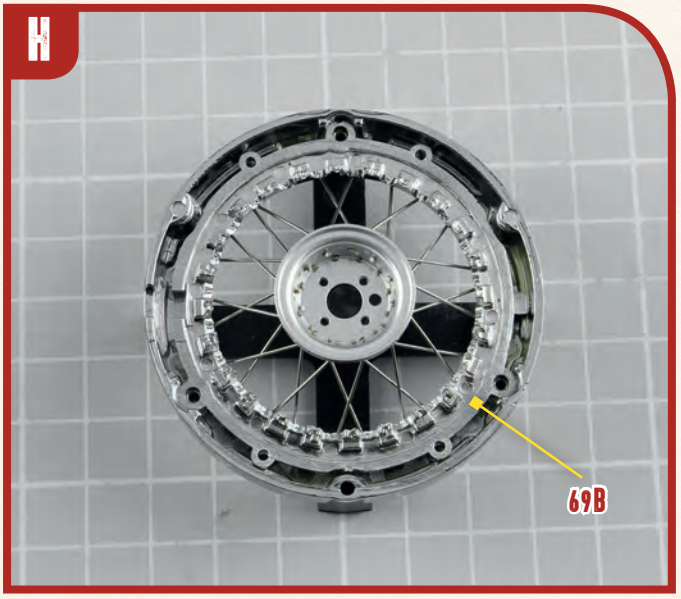

I

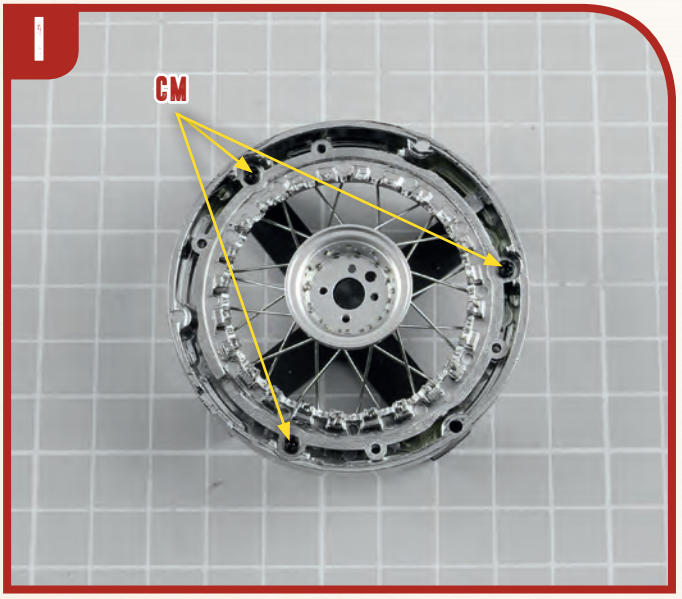

J

Insert 12 spokes 69E through 69D's second level of holes.



K

Insert 12 spokes 69E through 69D's fourth level of holes.

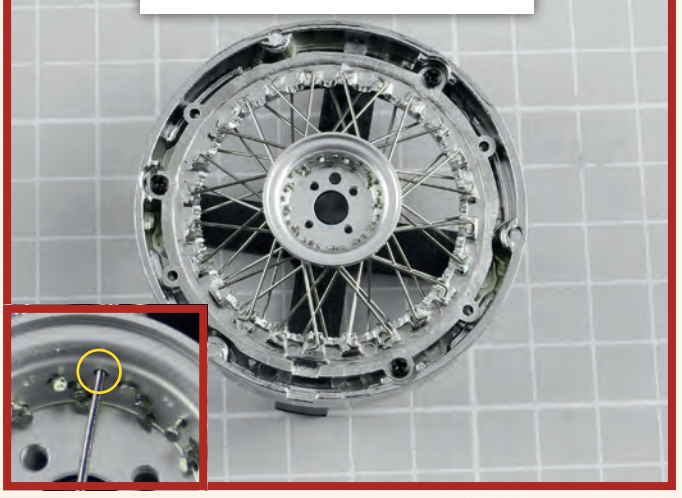

L

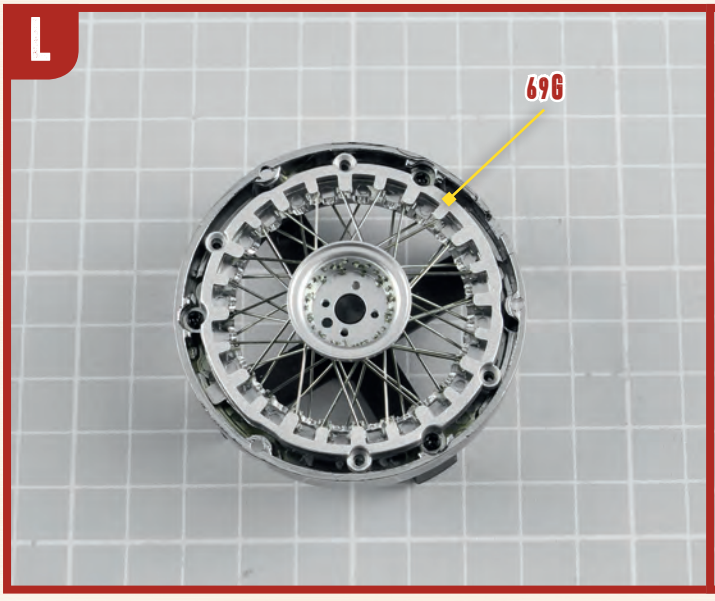

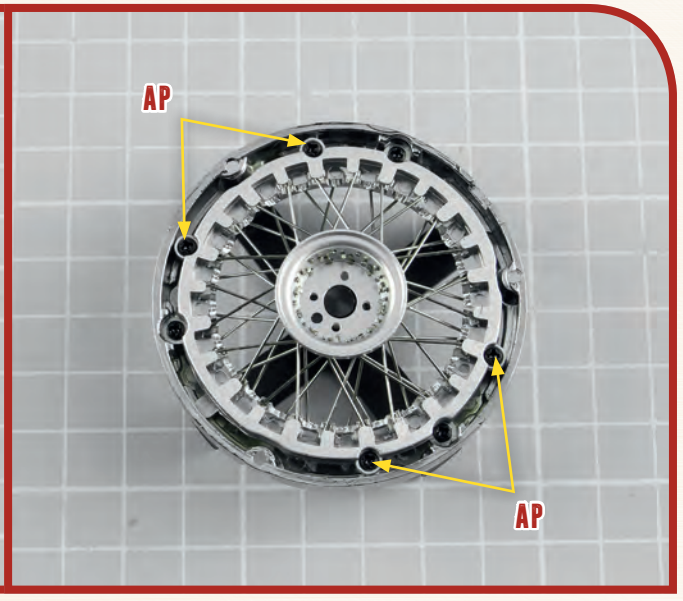

69B PARTS LIST

EASY ASSEMBLY



69AA	Central ring 1	**69GG**	Spokes 2
69BB	Hub 1		
69CC	Hub 2	**LP**	5 screws (1.5x3mm)
69DD	Hub 3	**TP**	4 screws (1.5x5mm)
69EE	Hub 4	**UP**	4 screws (1.7x4mm)
69FF	Spokes 1		

A

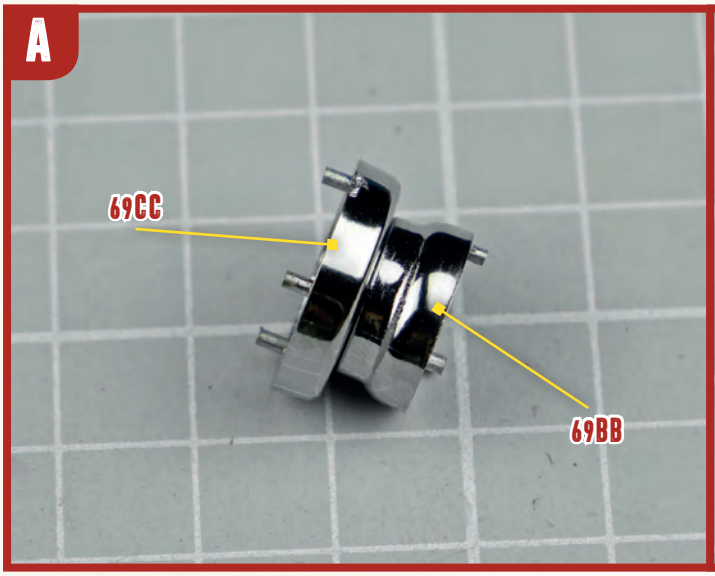

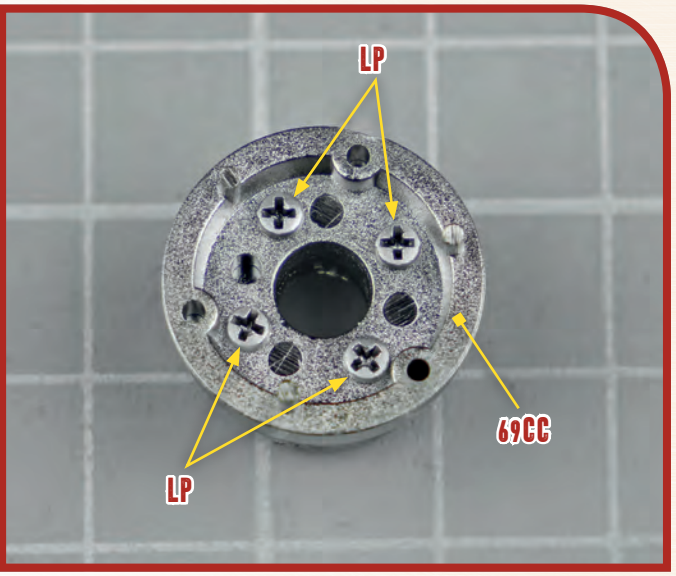

B

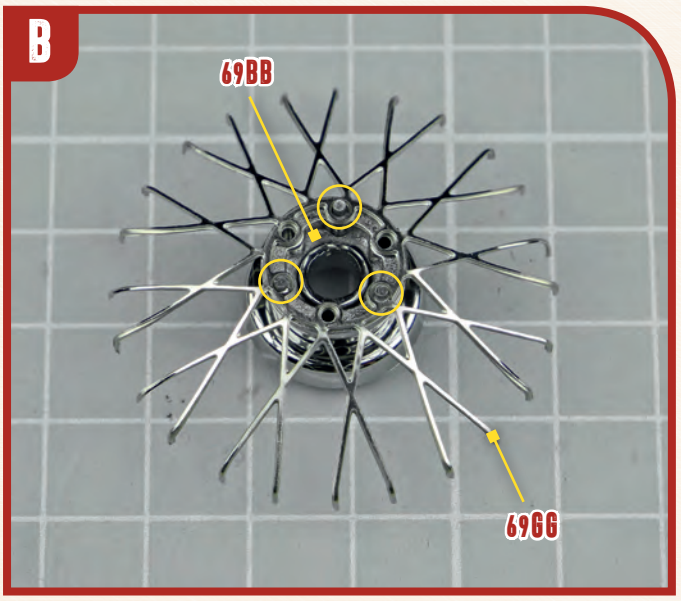
69BB
69GG

C

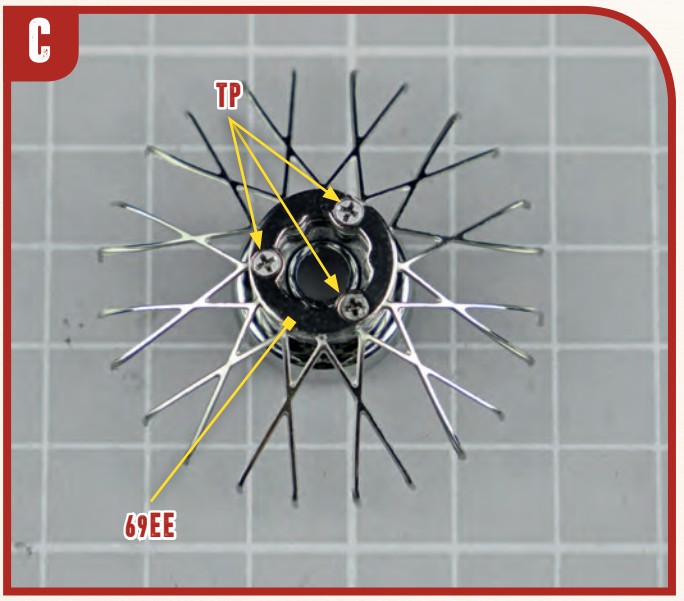
TP
69EE

D

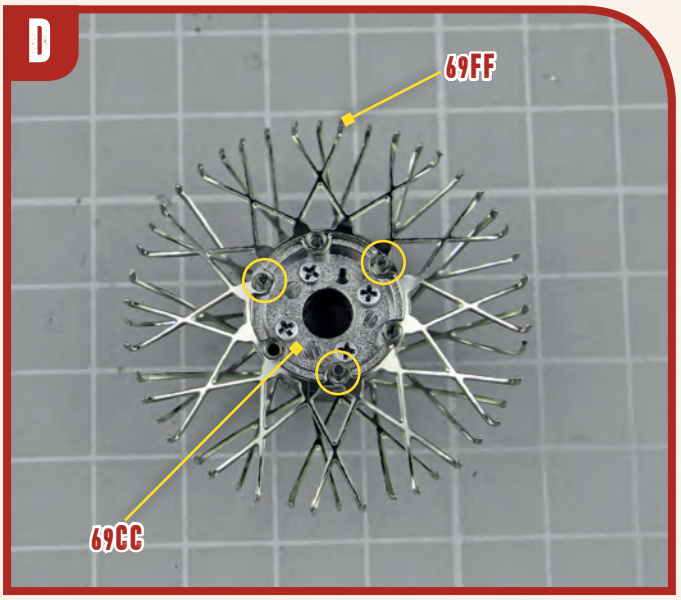
69FF
69CC

E

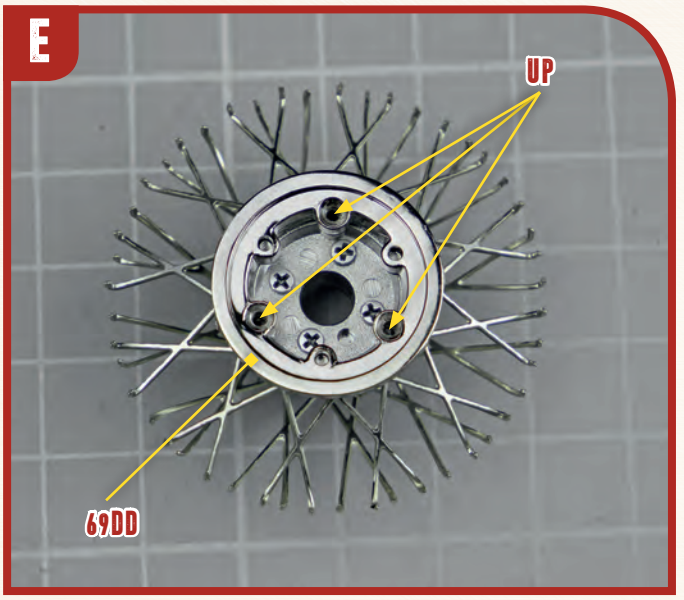
UP
69DD

F

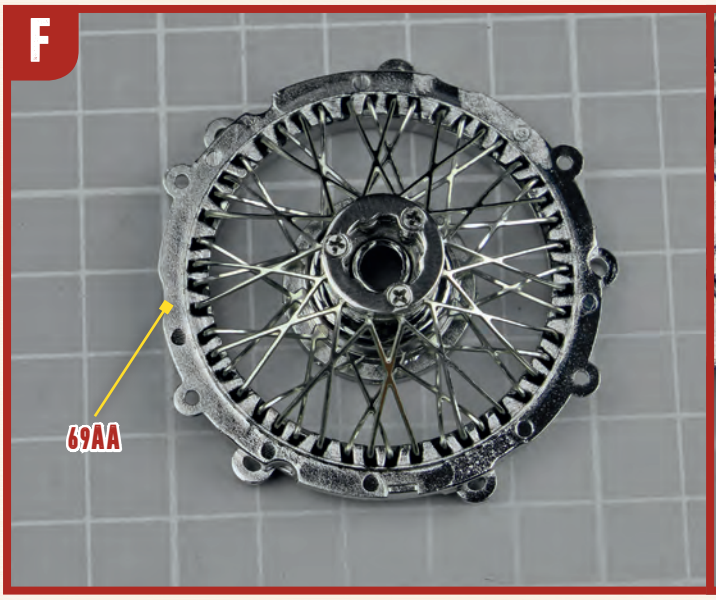
69AA

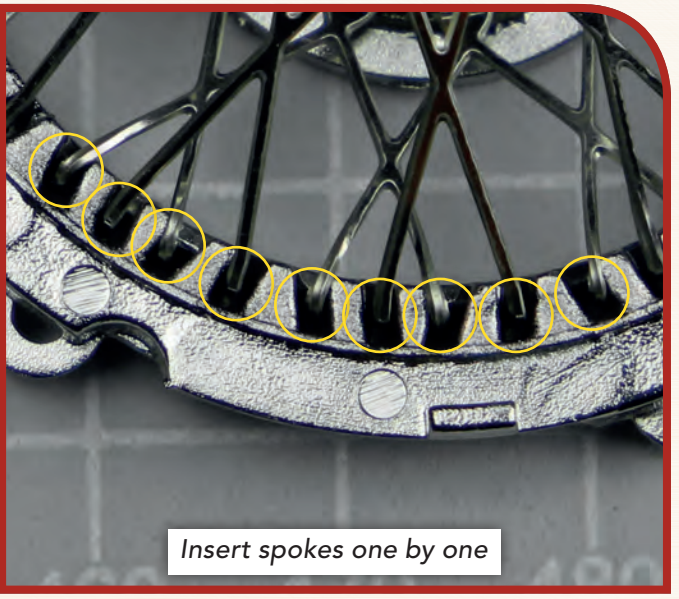
Insert spokes one by one

70 PARTS LIST

REGULAR ASSEMBLY

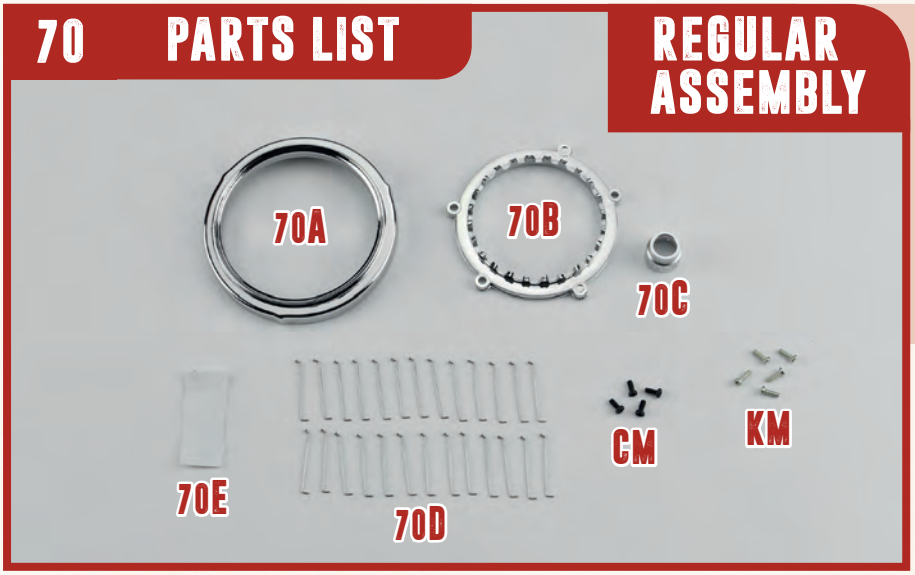

70A	Inner rim
70B	Central ring 3
70C	Hub 2
70D	Spokes 3
70E	Double-sided tape
CM	4 screws (1.7x4mm)
KM	5 screws (1.5x5mm)

A

Apply 24 pieces of double-sided tape 70E to 69B's inner profile and tear off their top sheets.

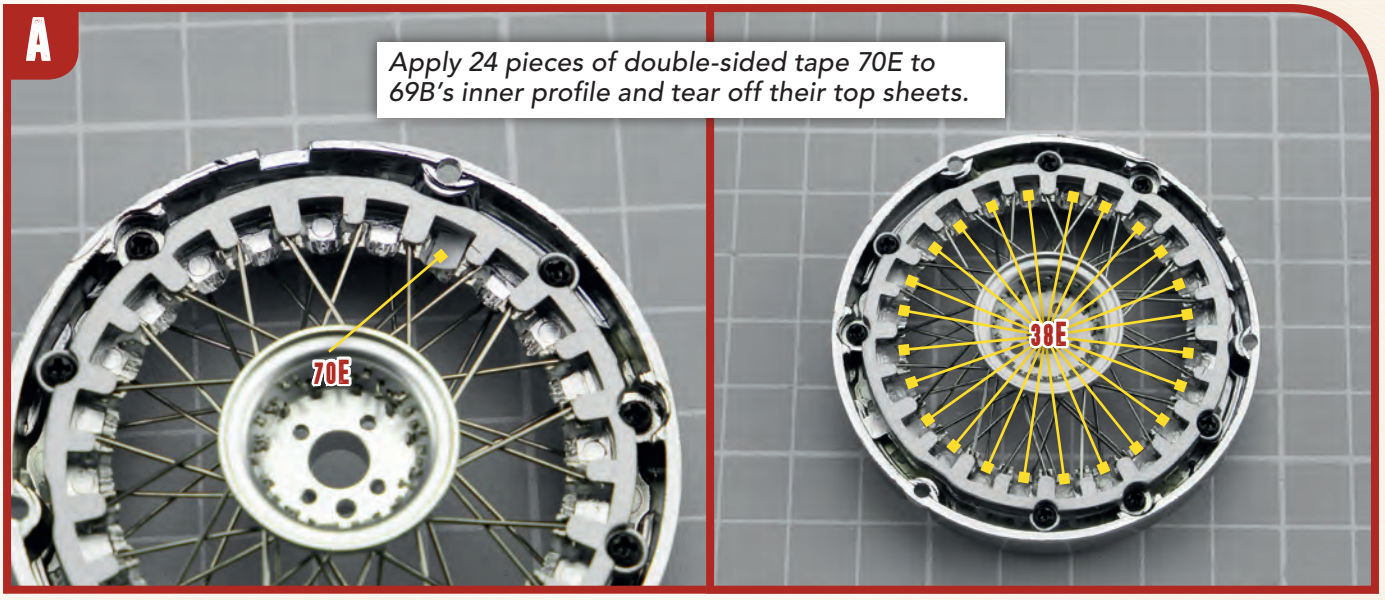

B

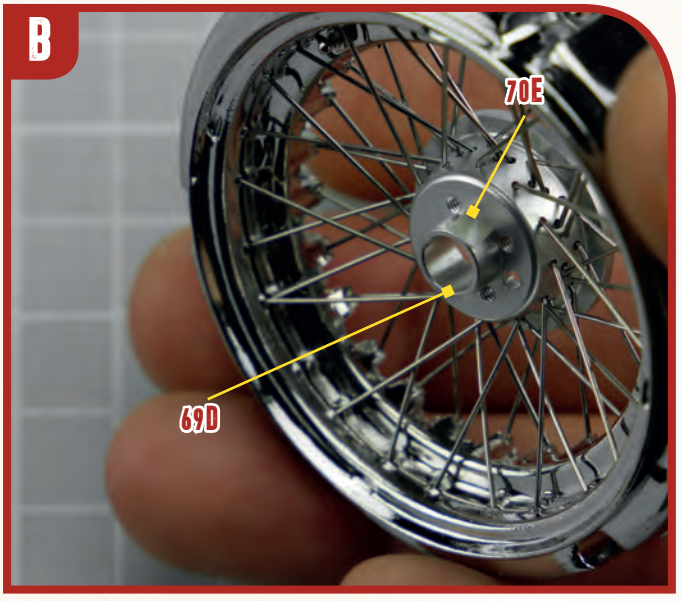

C



D

Insert 1 spoke 70D through a hole in 70C's first level (counting from the bottom). Place its thinner end as shown, on tape 70E.

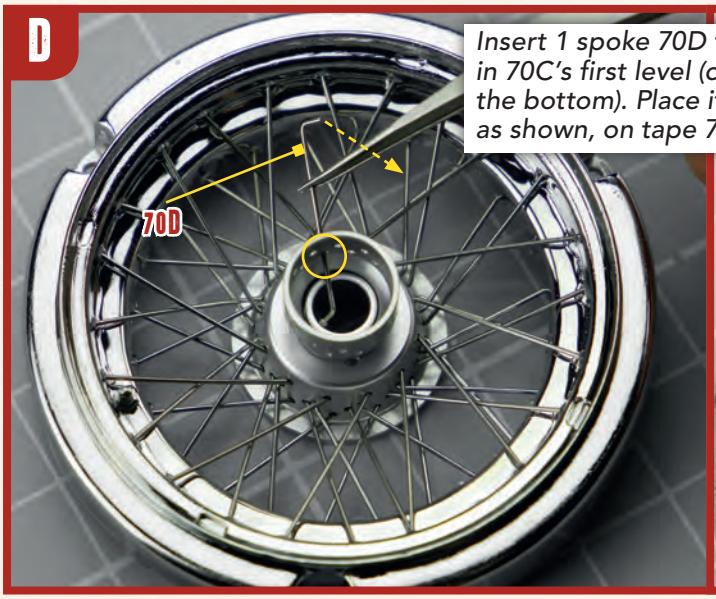

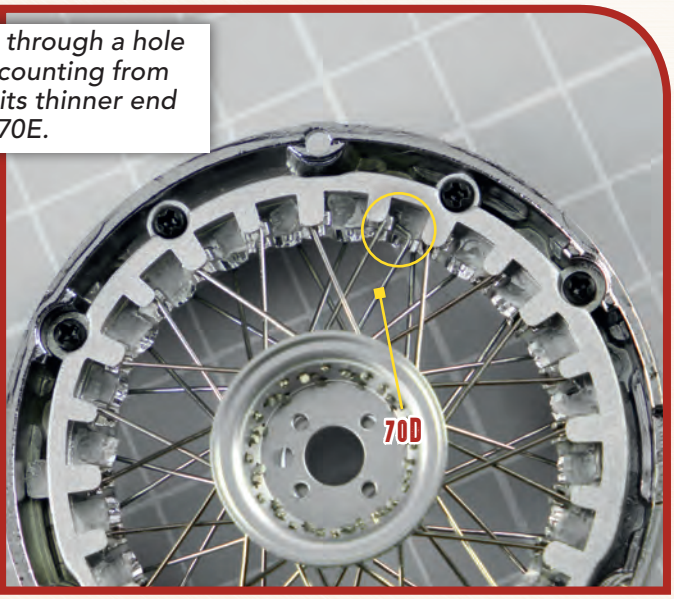

E

Repeat the process with other 11 spokes 70D. Leave one empty spot between the thinner ends of spokes 70D.



F

Insert 12 spokes 70D through 70C's second level of holes. Place their thinner ends on the empty spots from Step E, on tapes 70E.



G

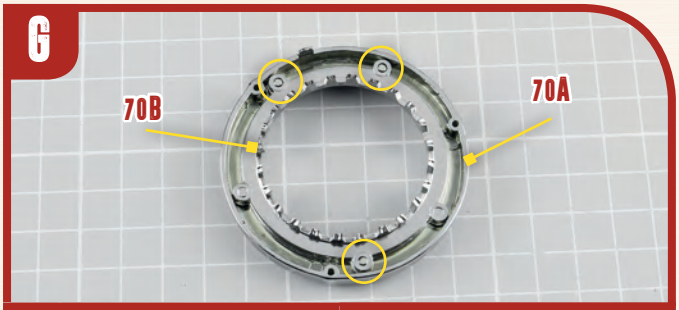

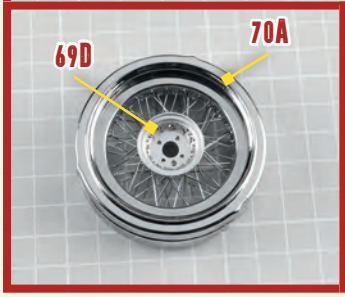

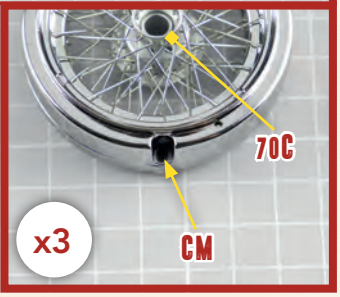

H

Tighten or loosen the four KM screws to adjust the position of the spokes.

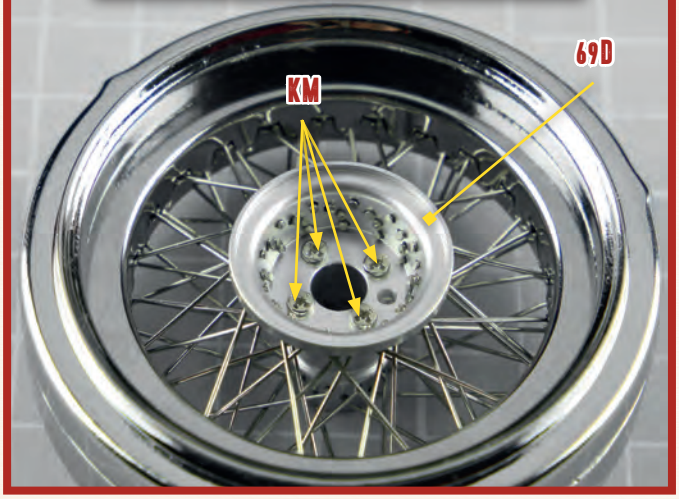

70B PARTS LIST



EASY ASSEMBLY

70AA Outer rim
70BB Inner rim
70CC Central ring 2
70DD Inflation valve

AP 5 screws (1.7x4mm)
CM 8 screws (1.7x4mm)

A

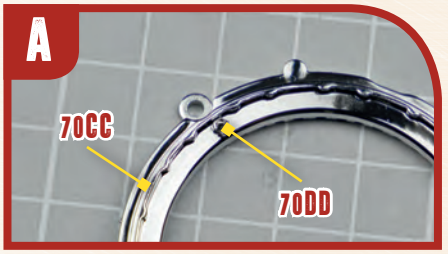

B

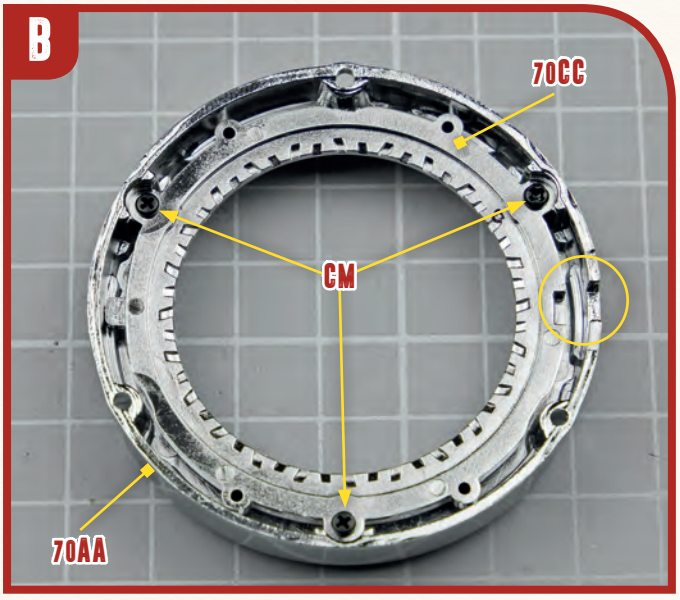

C

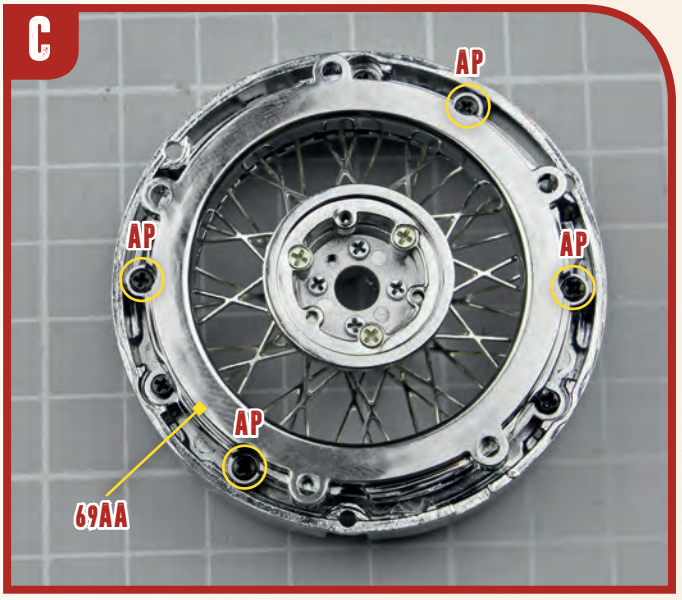

D



E

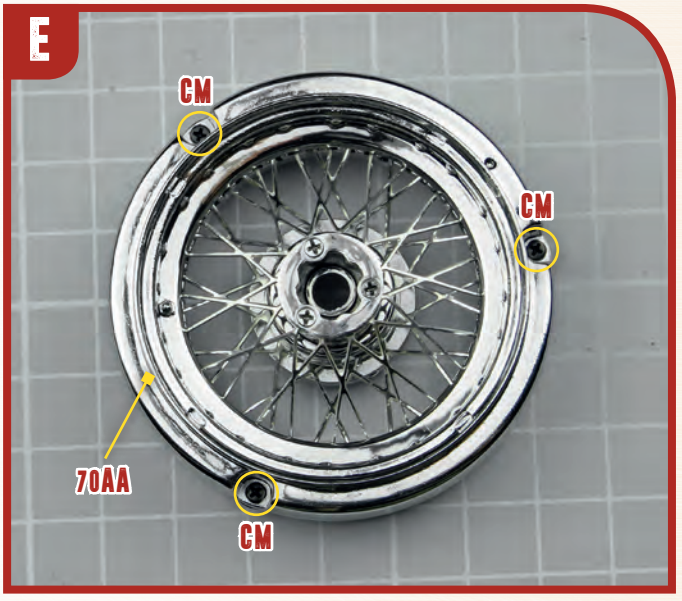

71 PARTS LIST

REGULAR ASSEMBLY



71A	Tyre
71B	Hub 3
71C	Hubcap
71D	Washer ring
JM	2 screws (2x5mm)

A

Soften tyre 71A by placing it in a bowl full of hot water.

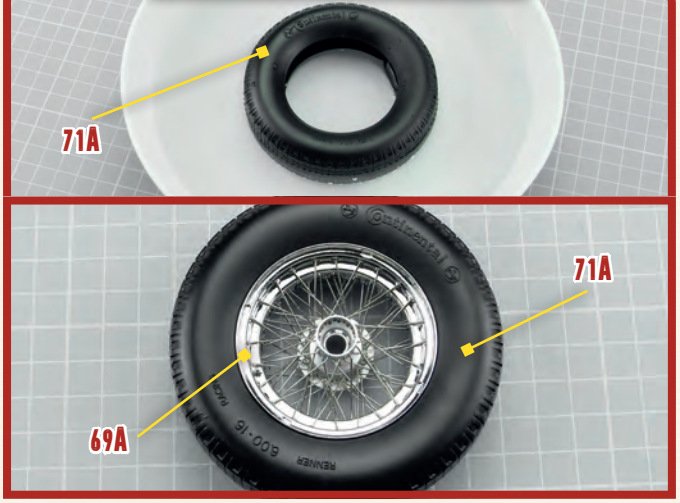

B

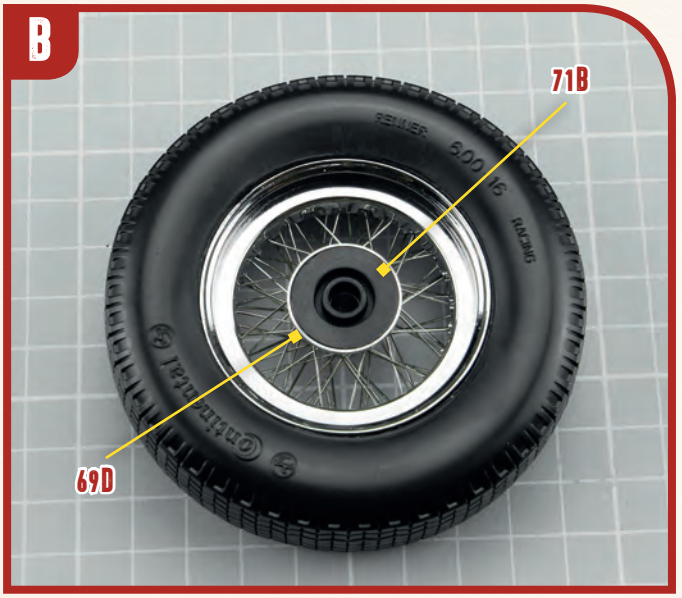

C

Attach wheel to rear suspension right wishbone 28A



D



71B PARTS LIST



EASY ASSEMBLY

71AA Tyre
71BB Hubcap
71CC Hub 5
71DD Washer ring

JM 2 screws (2x5mm)

A

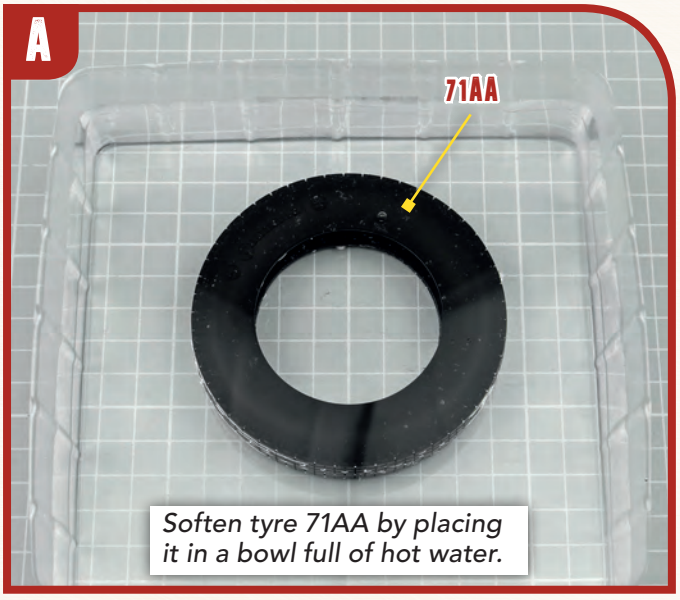

Soften tyre 71AA by placing it in a bowl full of hot water.

B

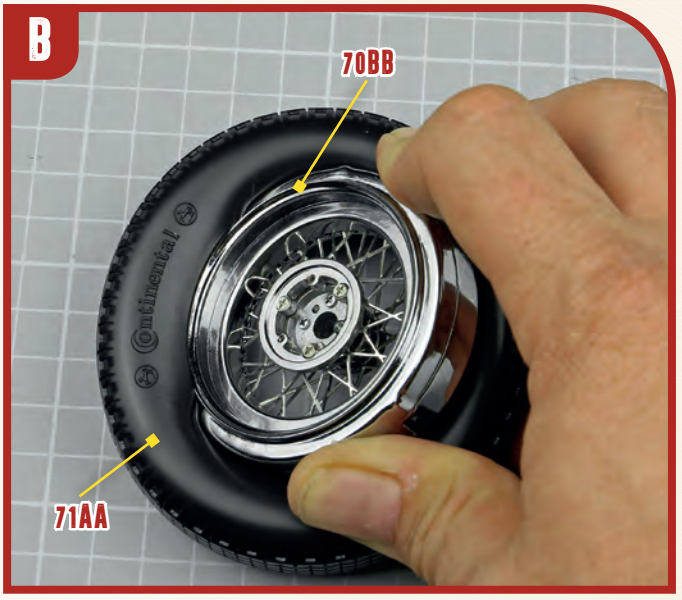

C

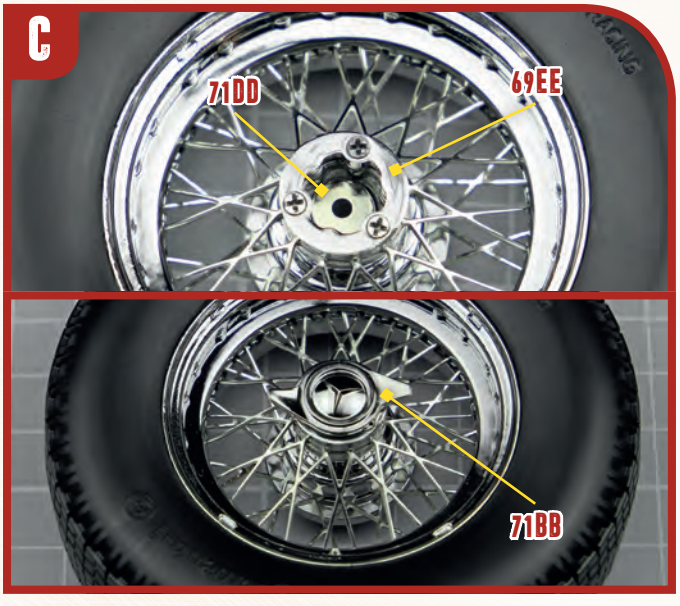

D

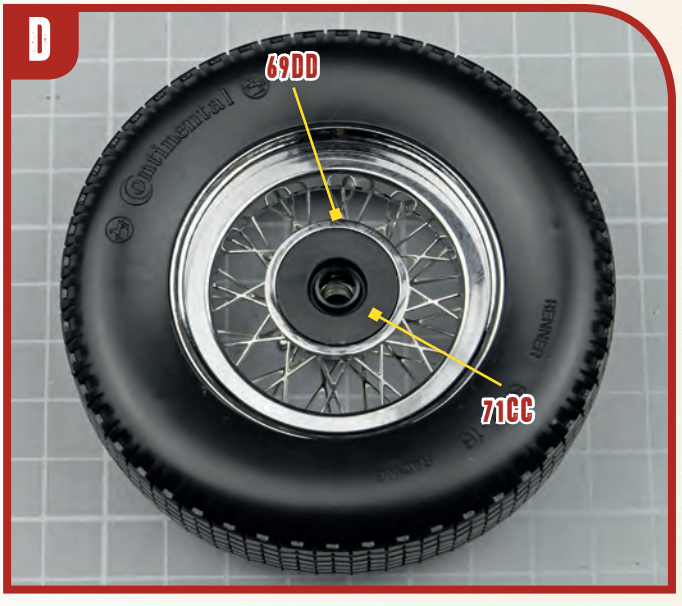

72 PARTS LIST

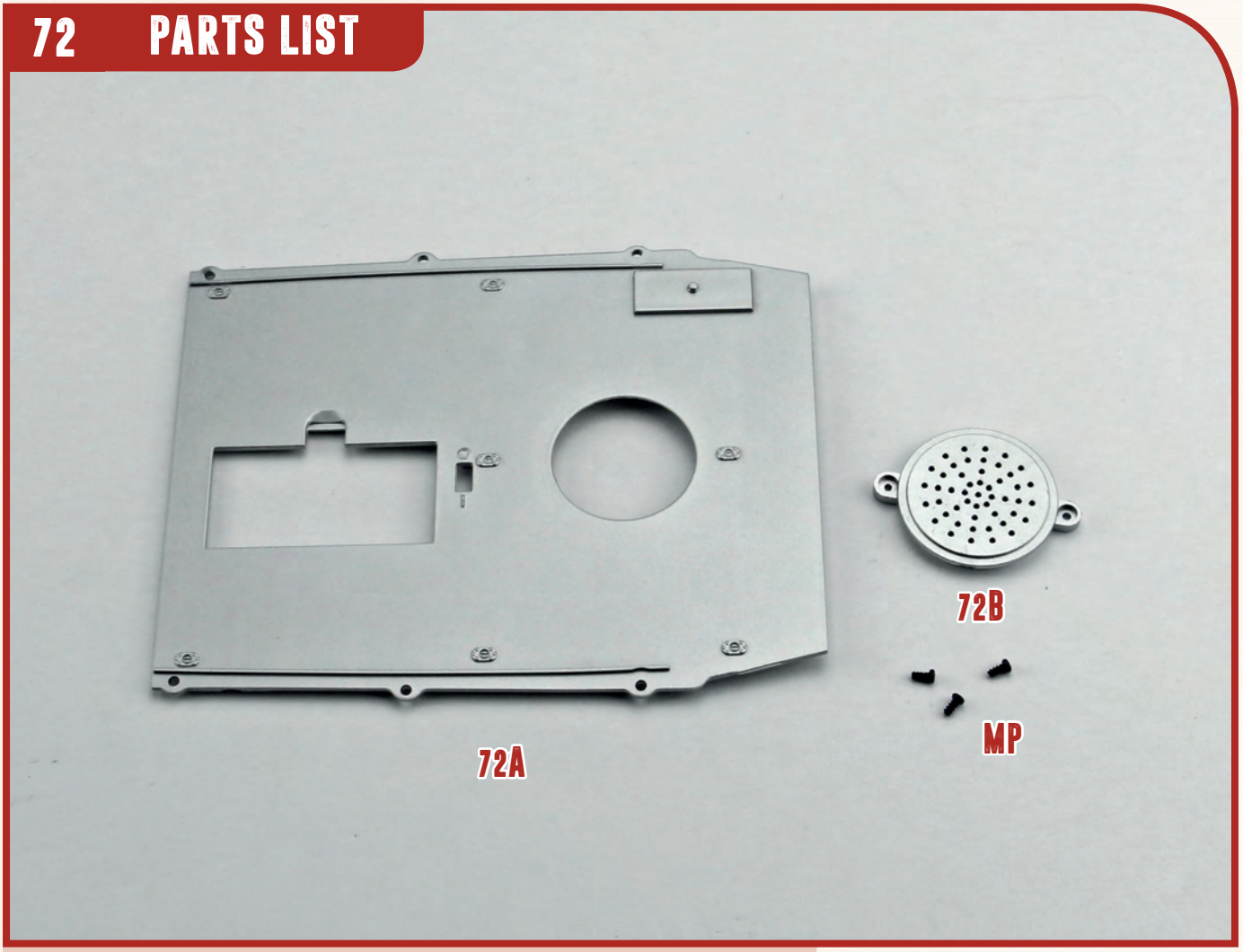

72A Bottom floor panel
72B Speaker cover
MP 3 screws (2x3mm)

A

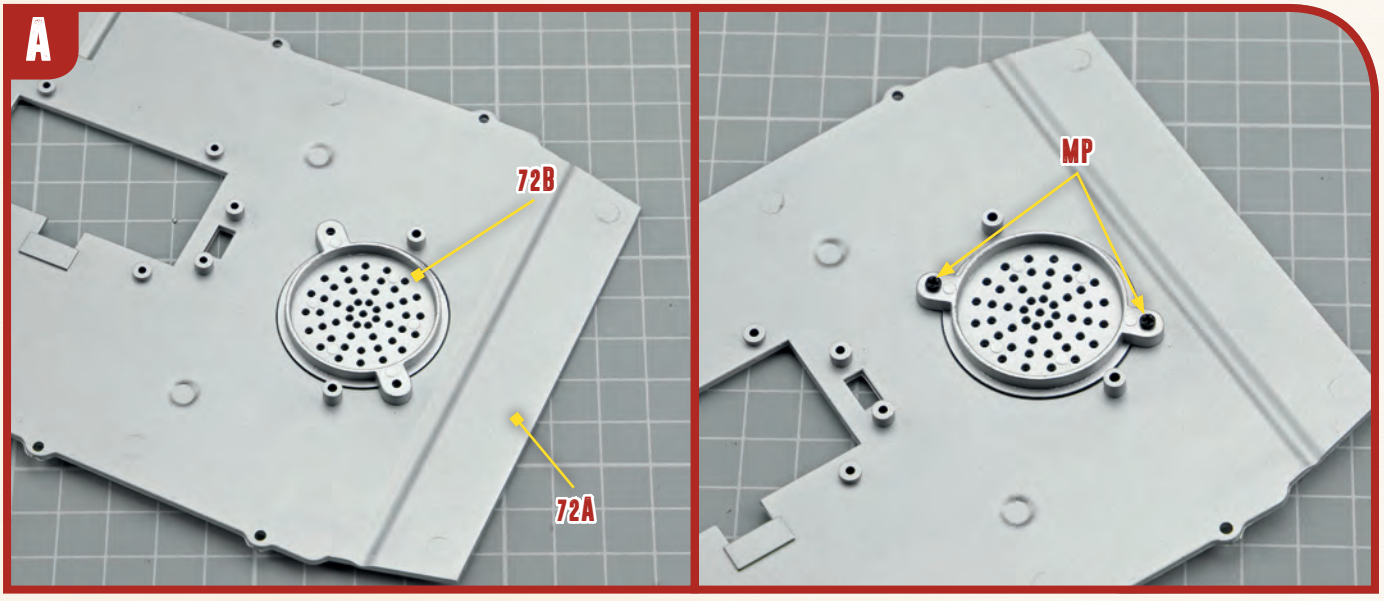

73 PARTS LIST

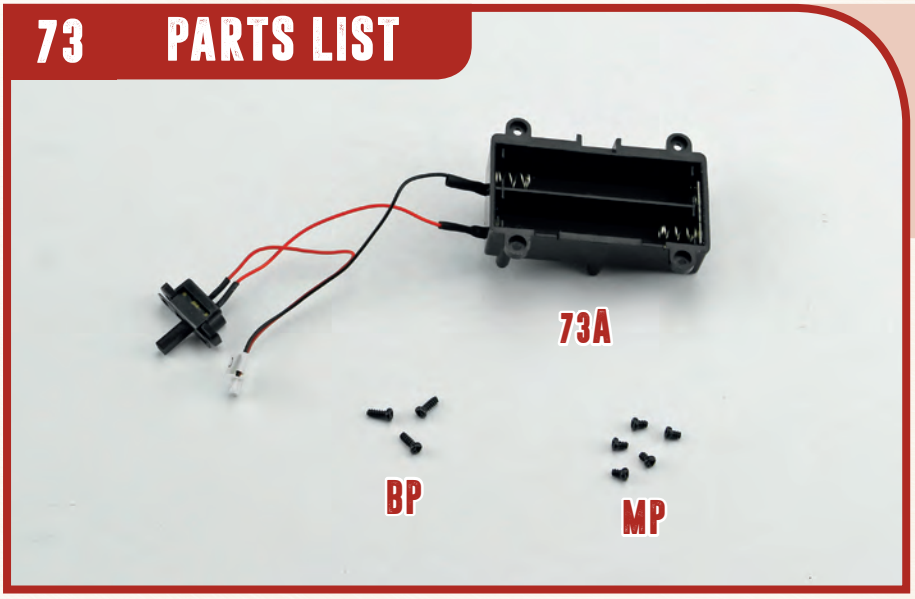

73A	Battery compartment with switch
BP	3 screws (2x5mm)
MP	5 screws (2x3mm)

A

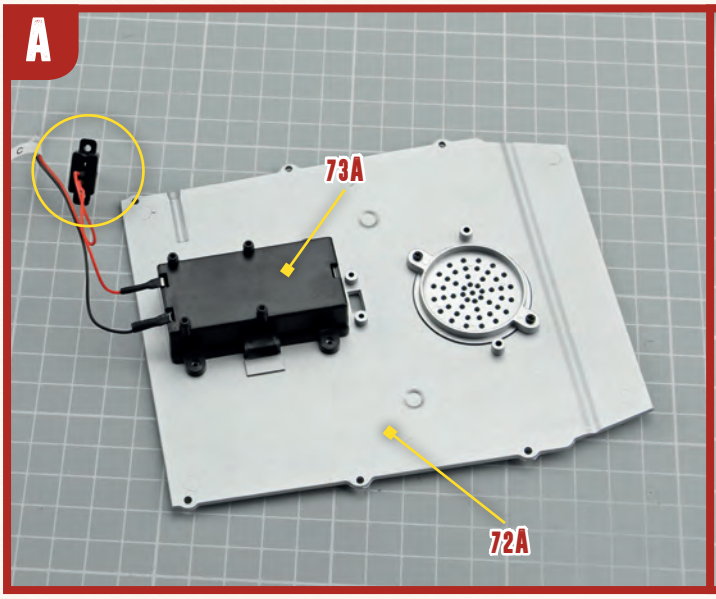

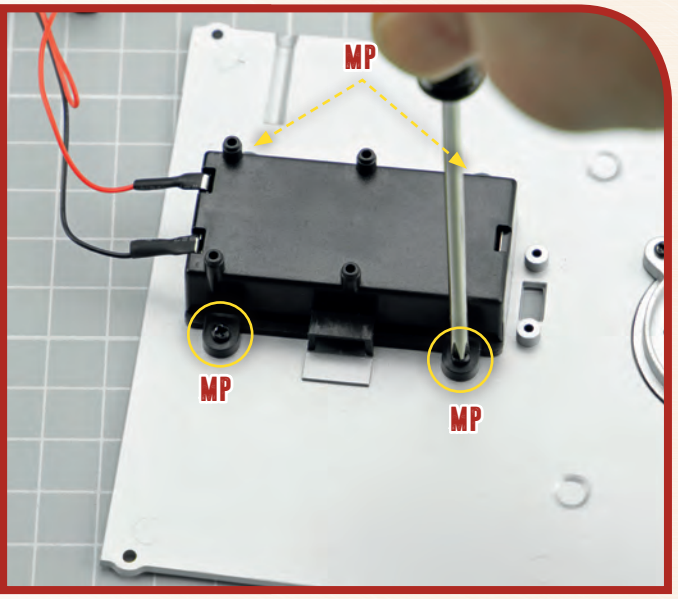

B

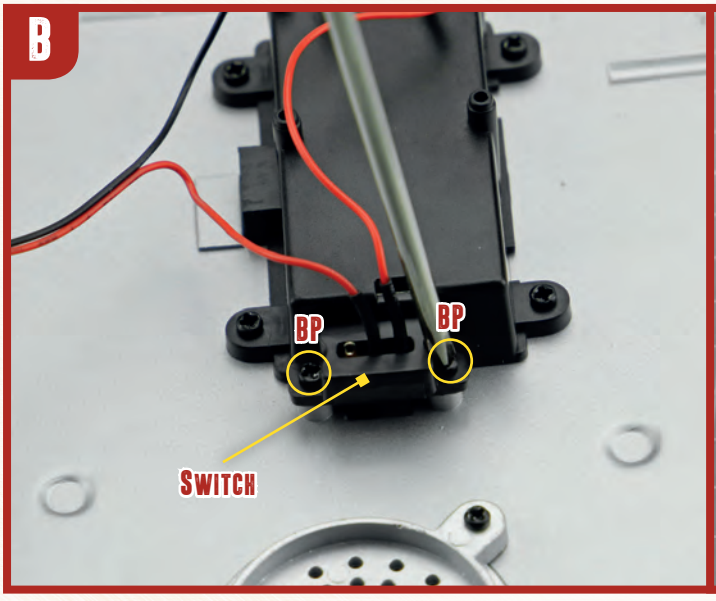



74 PARTS LIST

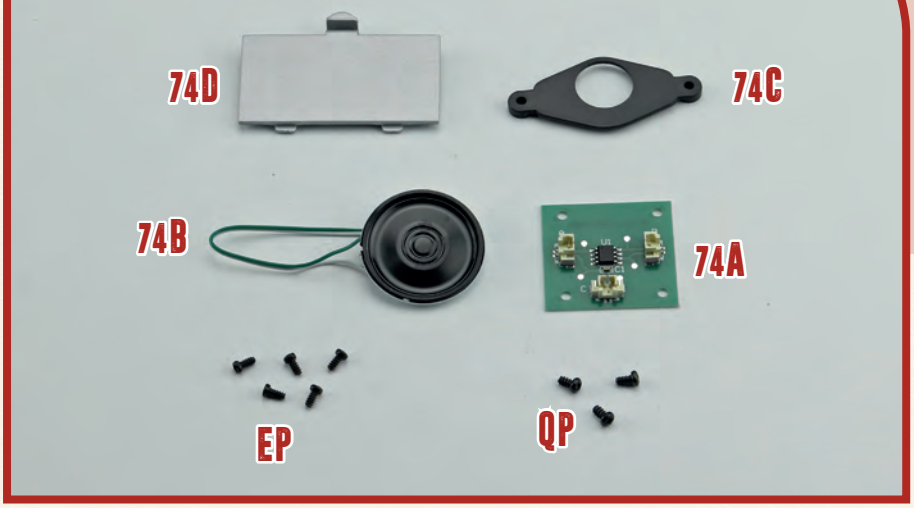

74A	PCB
74B	Speaker
74C	Speaker support
74D	Battery compartment cover
EP	5 screws (2x4mm)
QP	3 screws (2.3x4mm)

A

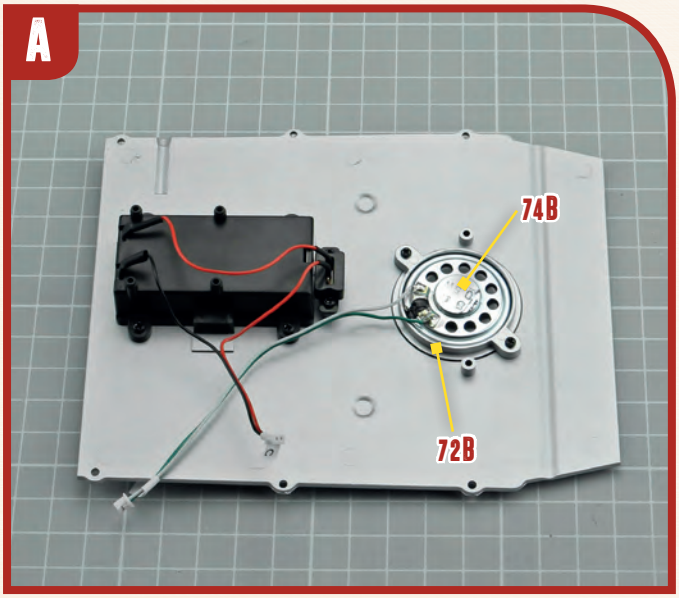

B

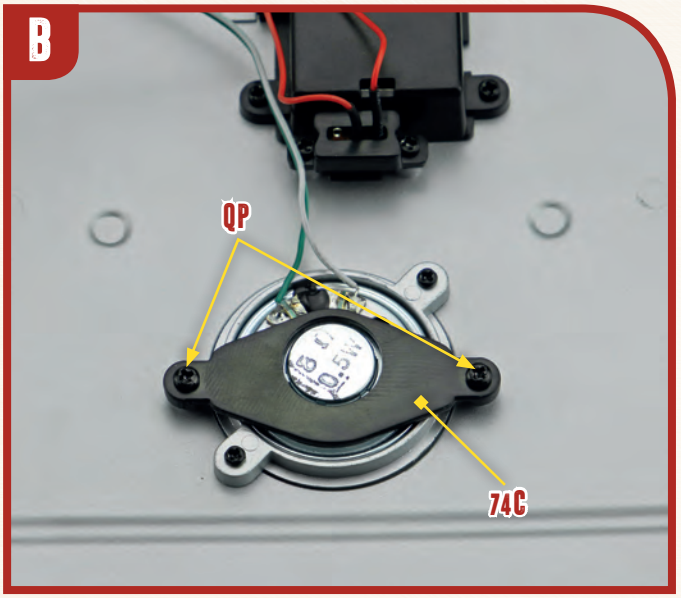

C

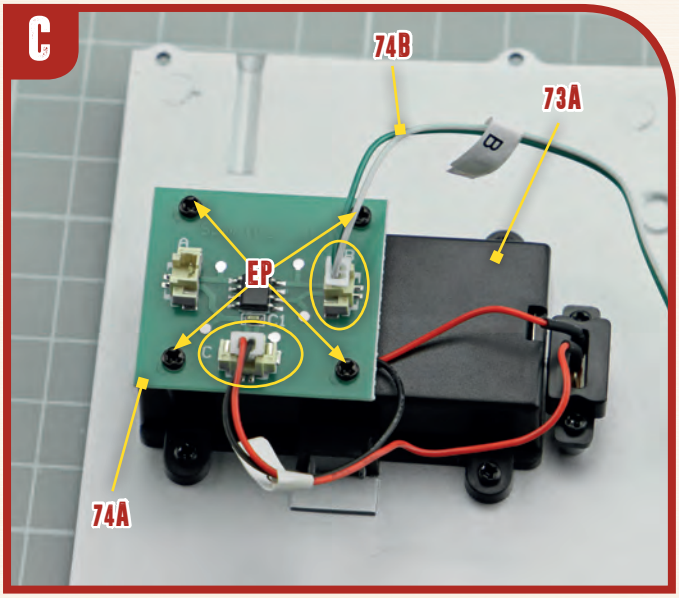

D

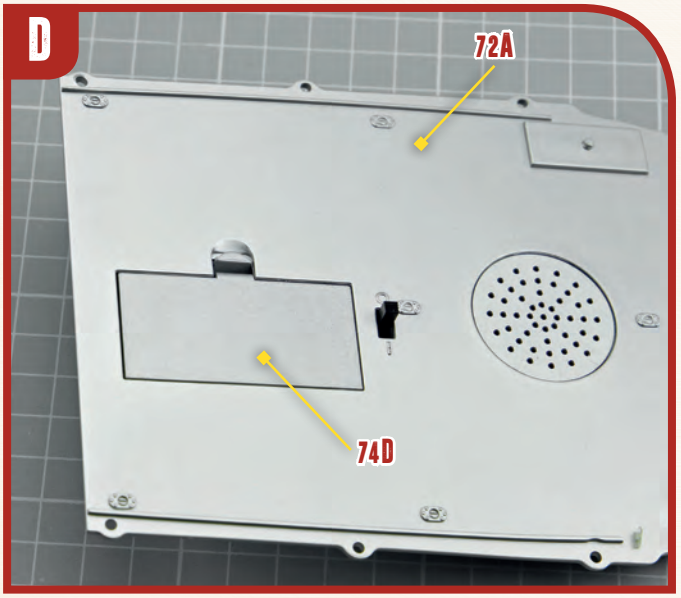

75 PARTS LIST

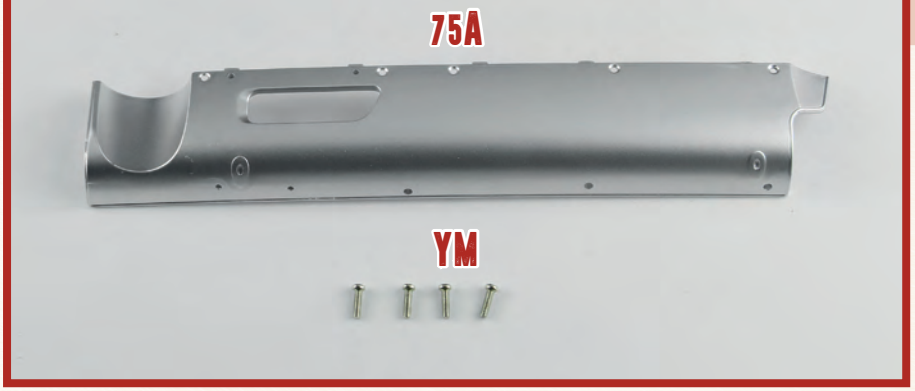

75A	Body lower panel (L)
YM	4 screws (2.3x8mm)

A

Insert three YM screws in the highlighted holes to enlarge them, then remove the screws

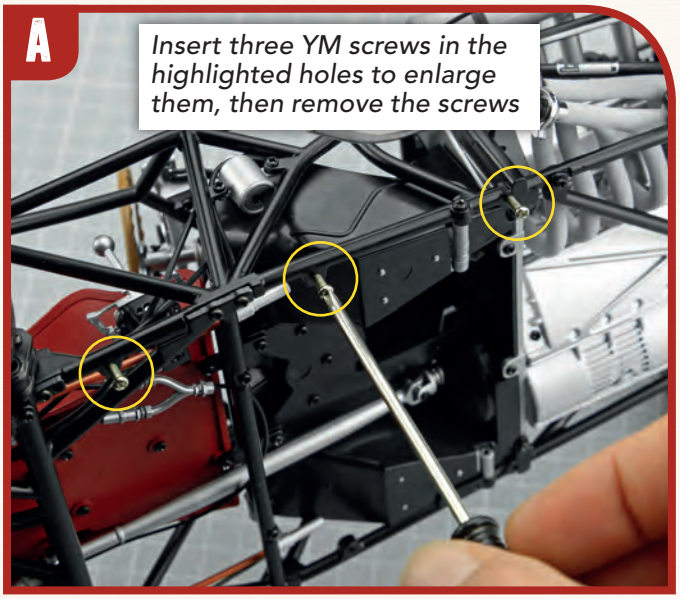

B

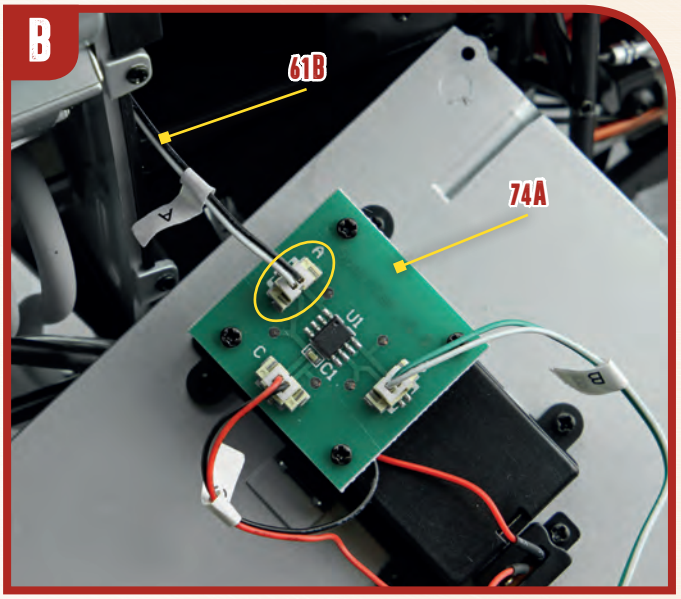

C

Attach bottom floor panel 72A and body lower panel 75A to chassis

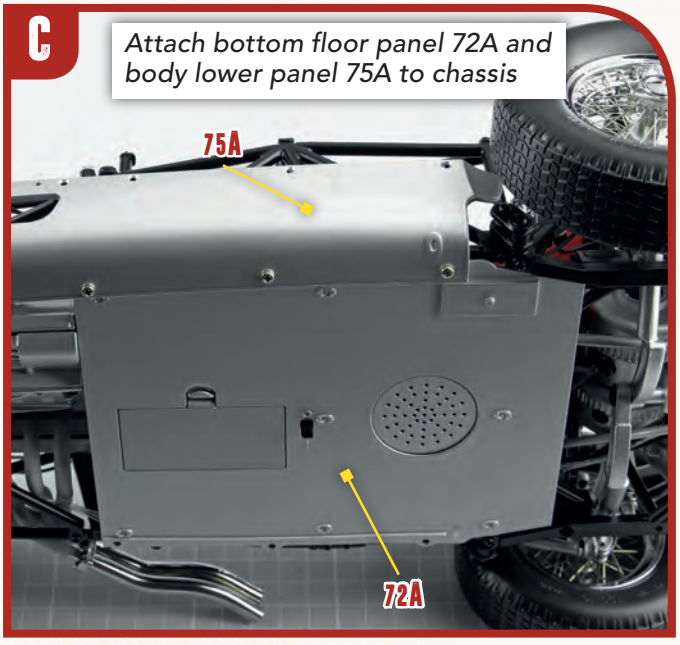

D

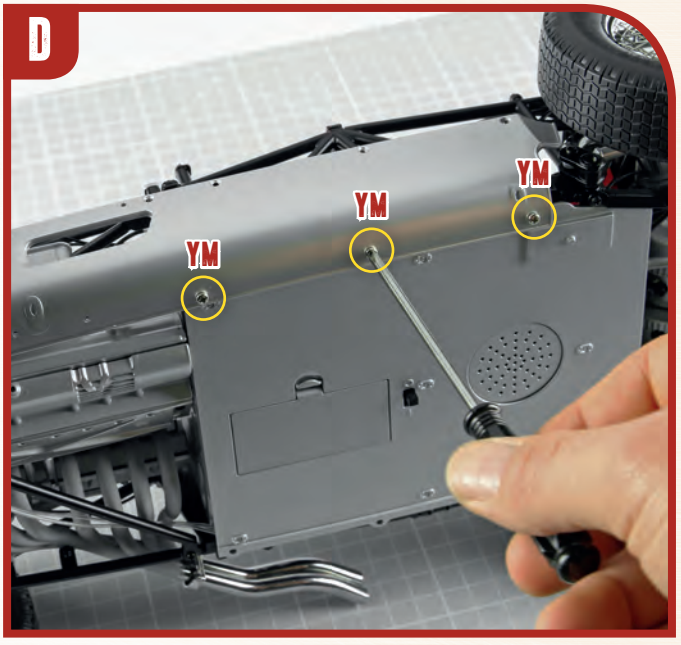

76 PARTS LIST

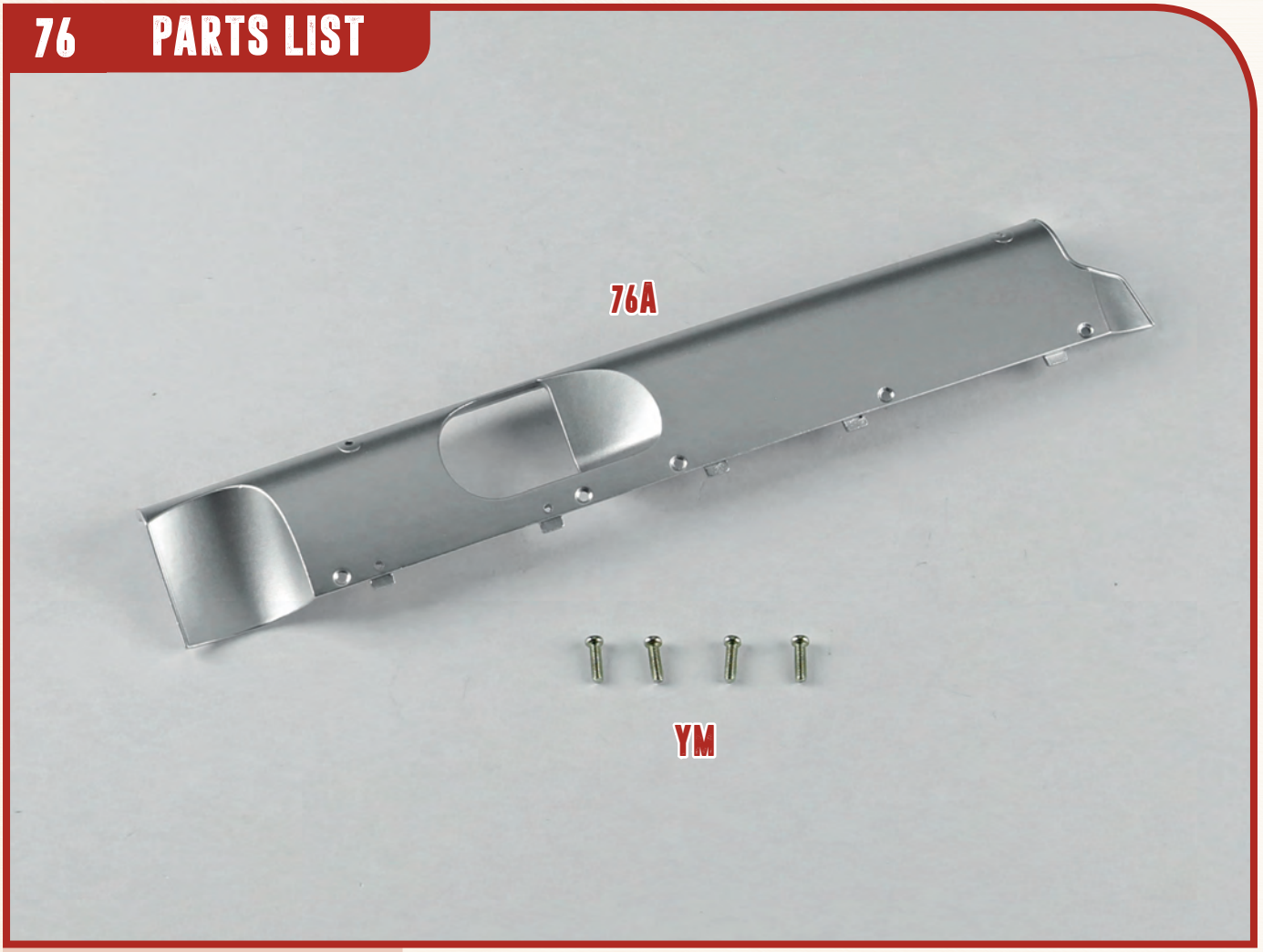

76A Body lower panel (R)

YM 4 screws (2.3x8mm)

A

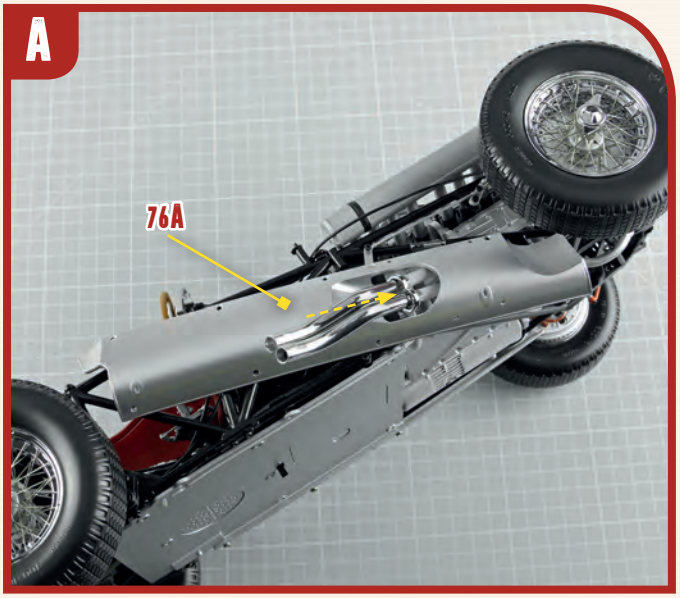

B

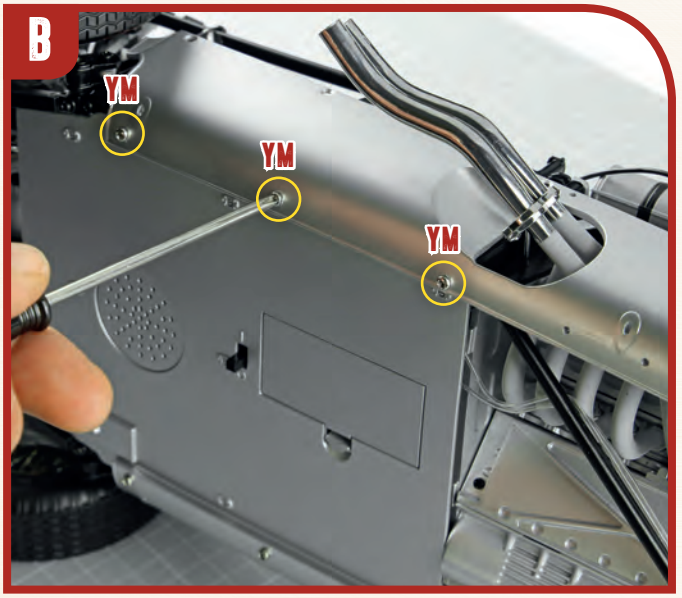

77 PARTS LIST



77A Mudguard 1 (L)
77B Mudguard 2 (R)
77C Stretchers (x4)
CM 10 screws (1.7x4mm)

A

Insert two AAA batteries into the battery compartment

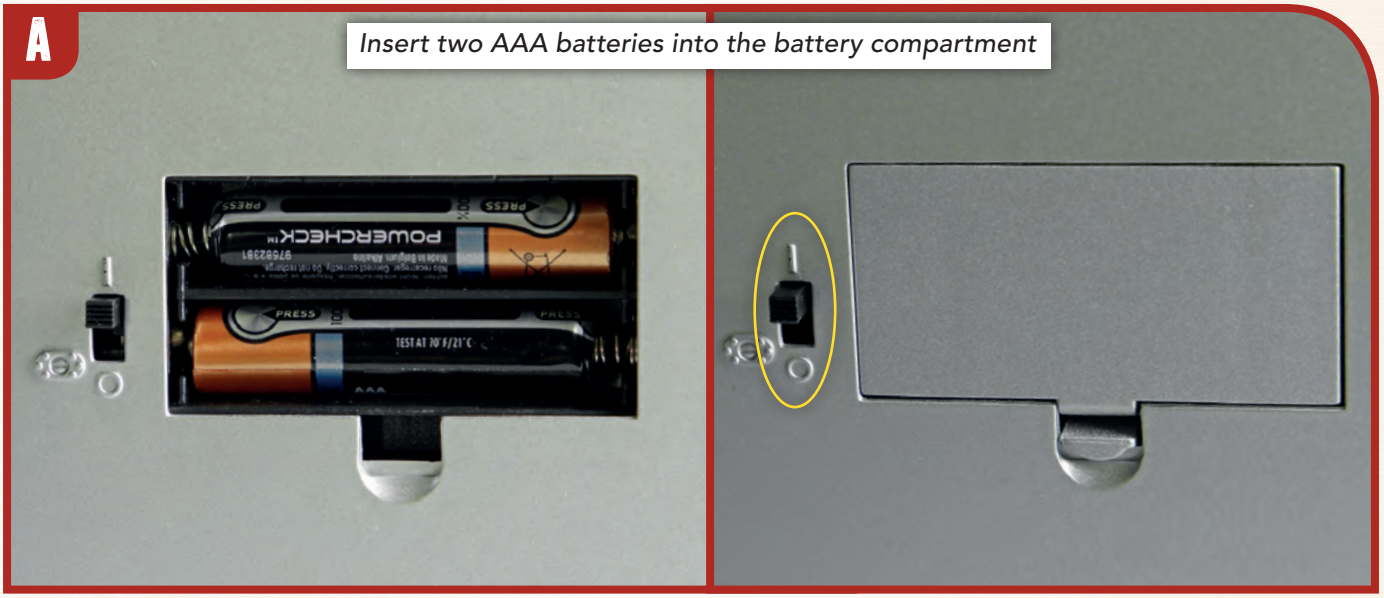

B

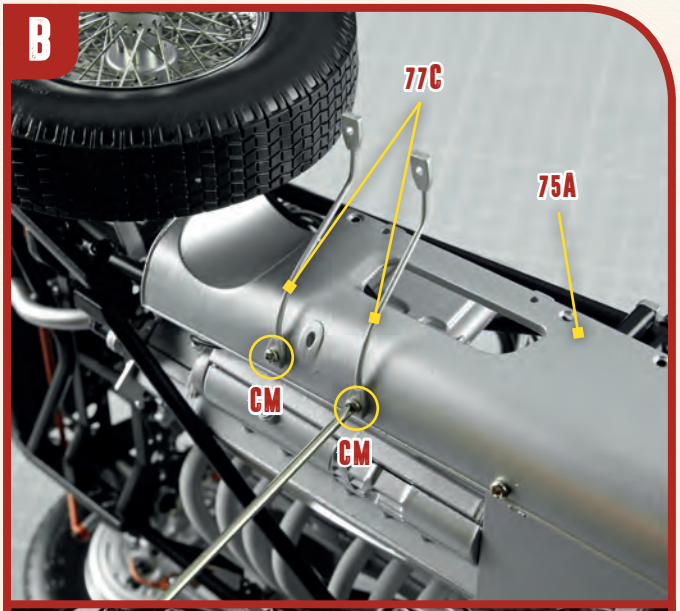
77C
75A
CM
CM

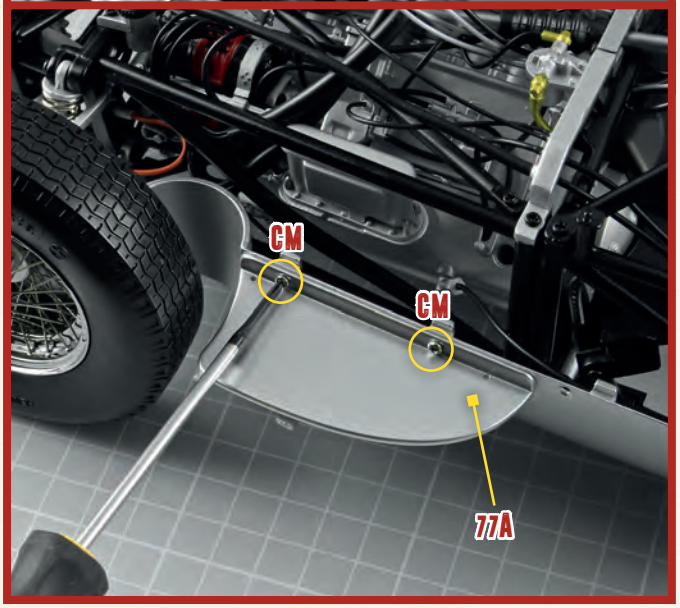
CM
CM
77A

C

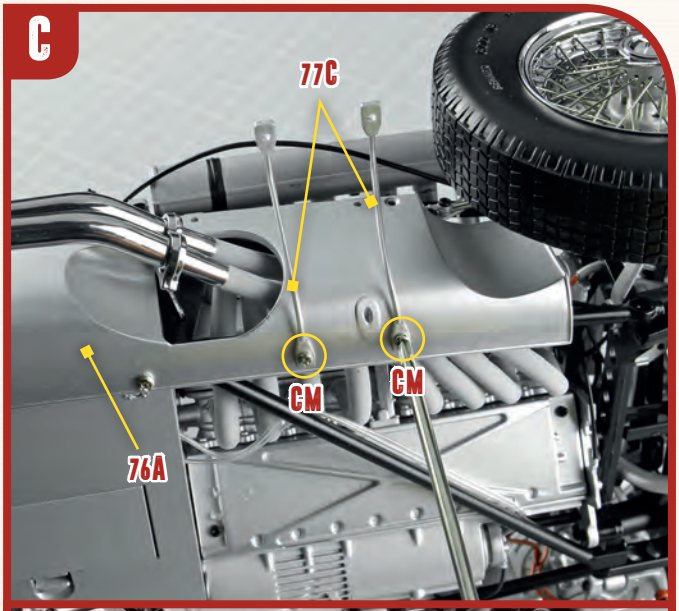
77C
CM
CM
76A

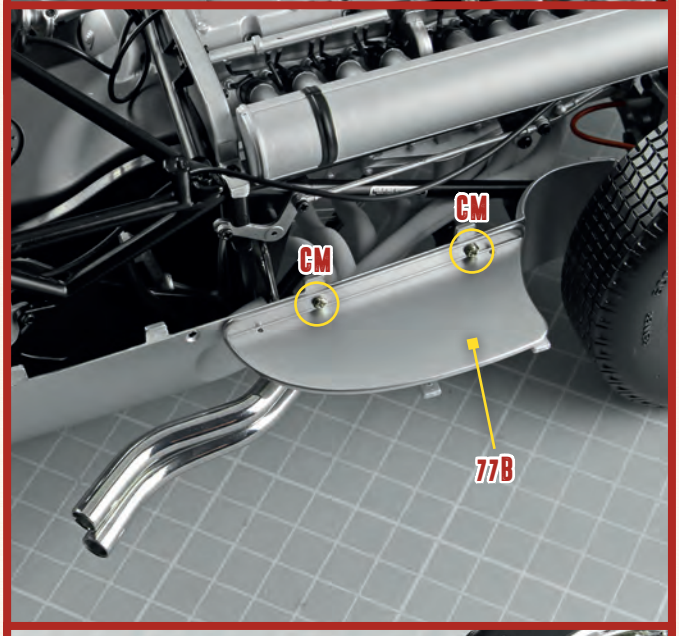
CM
CM
77B

D

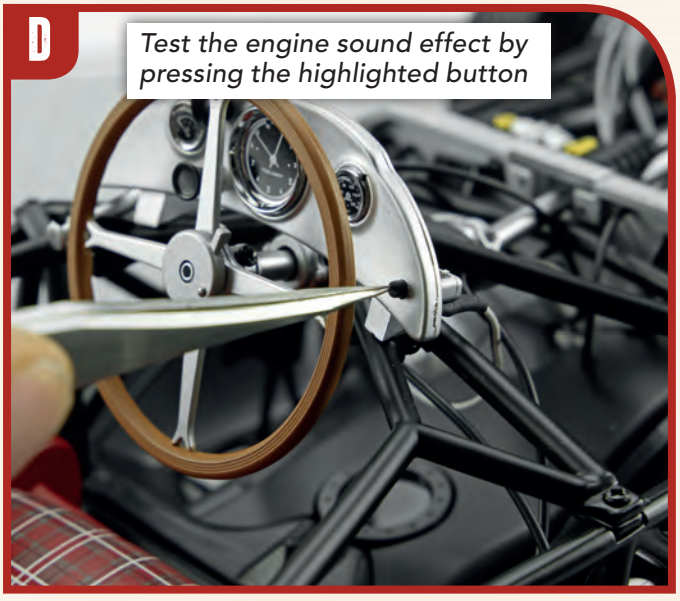
Test the engine sound effect by pressing the highlighted button

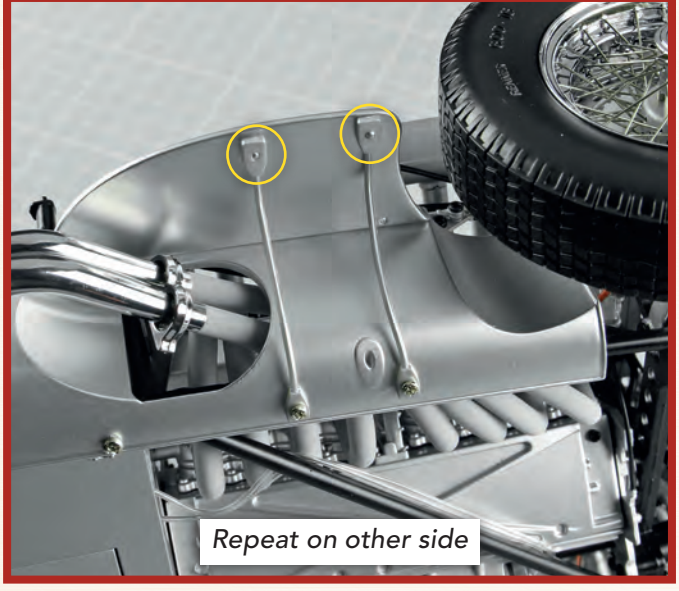
Repeat on other side

78 PARTS LIST

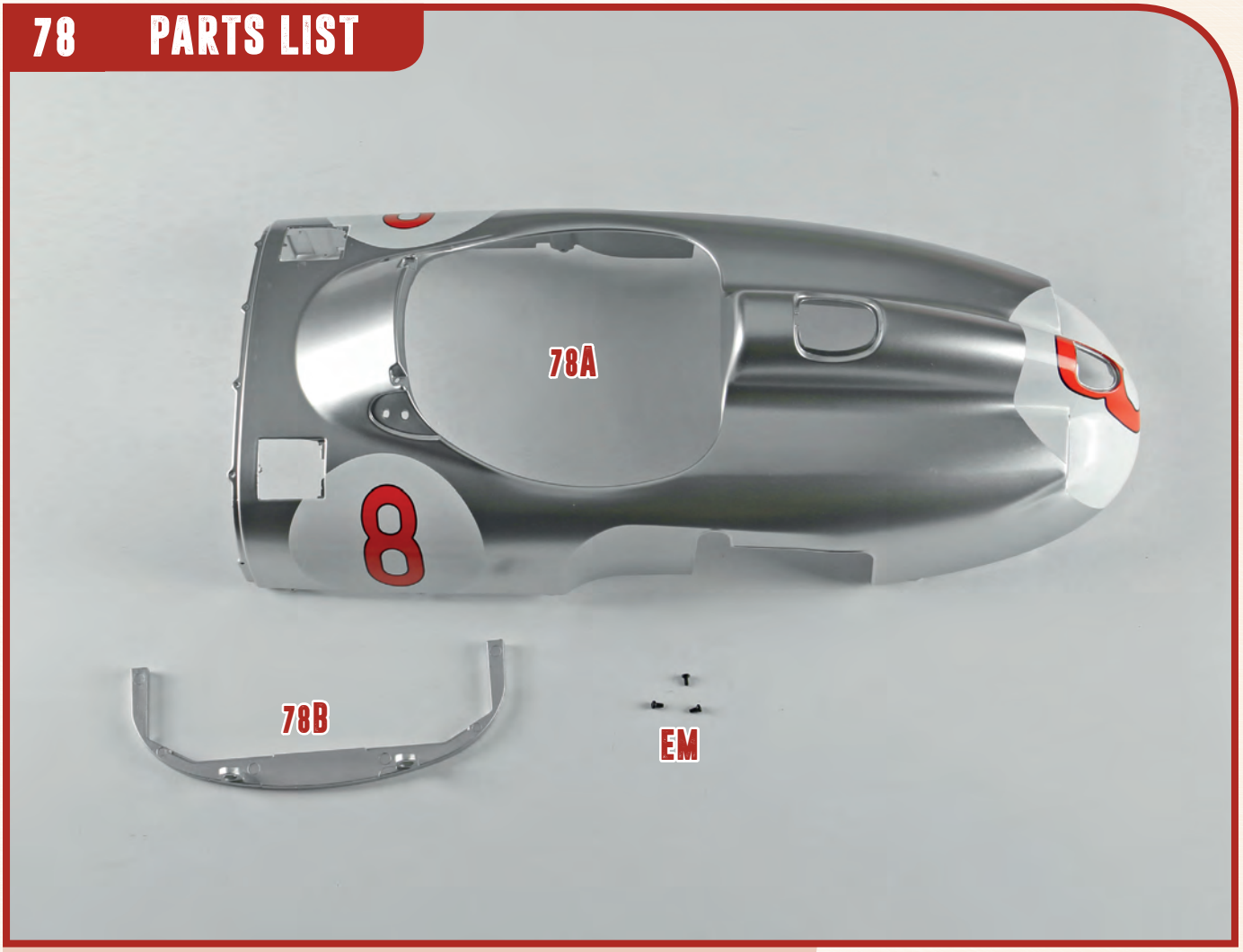

78A Body rear panel
78B Panel support
EM 3 screws (1.5x3mm)

A

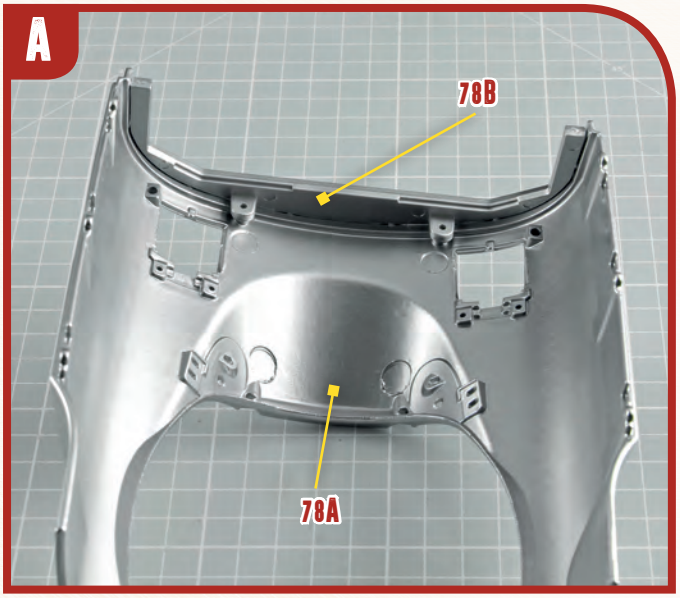

B

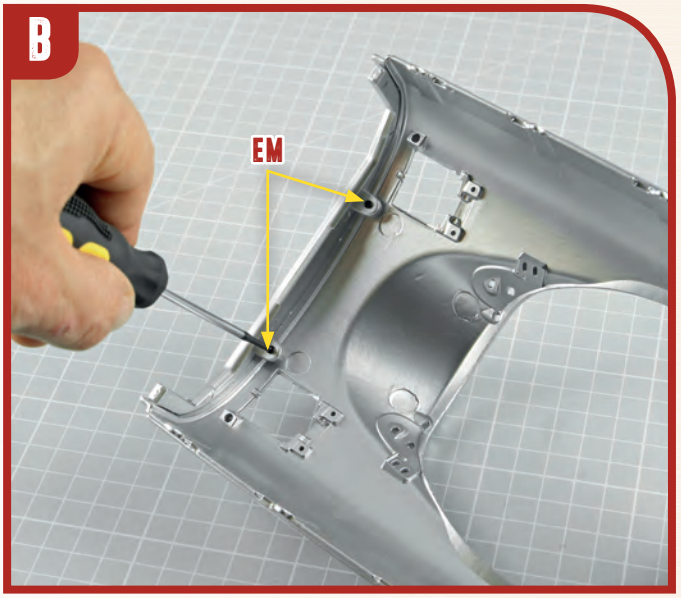

79 PARTS LIST

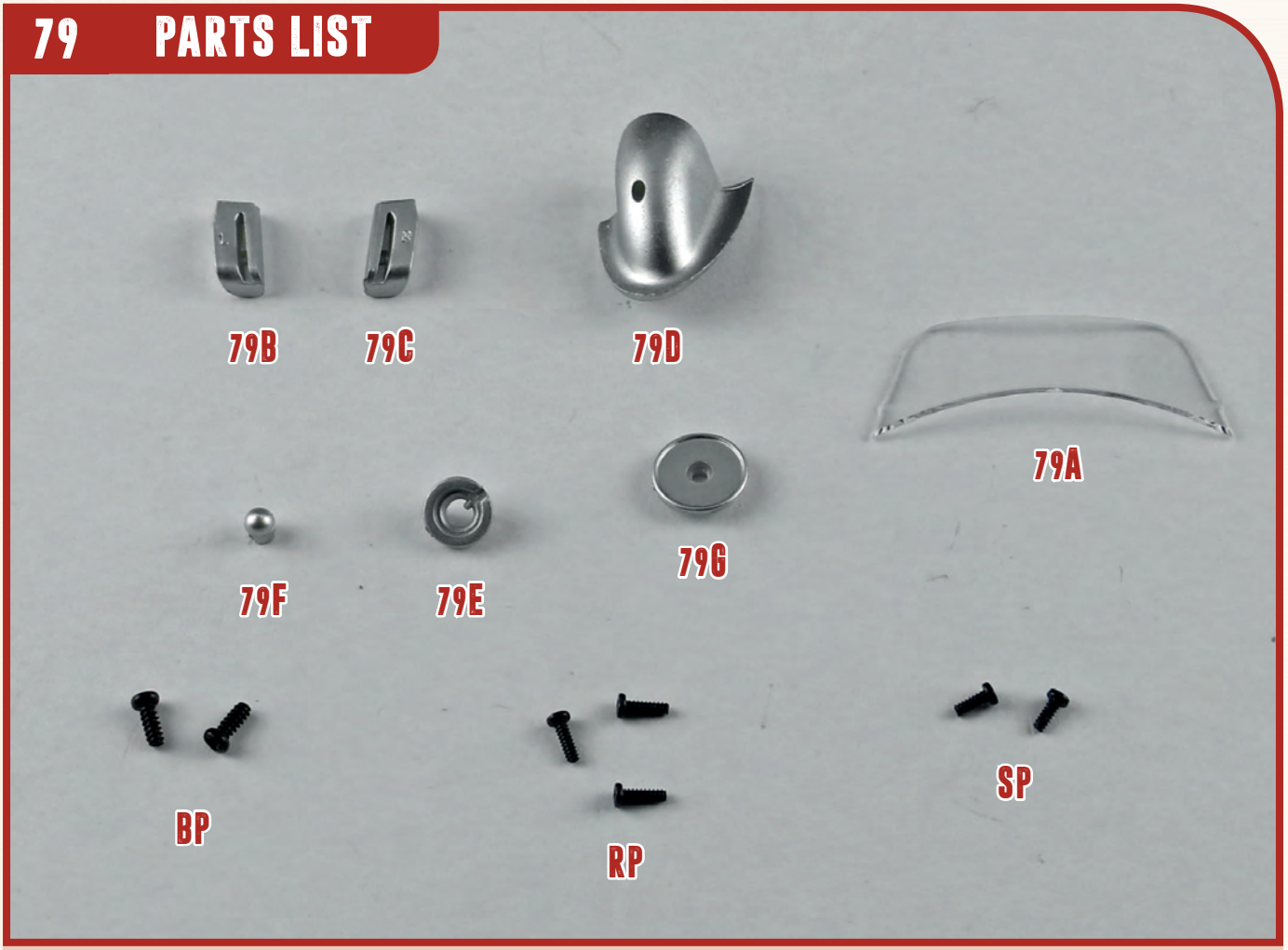

79A Windscreen
79B Windscreen support 1 (L)
79C Windscreen support 2 (R)
79D Left side-view mirror body
79E Mirror support 1
79F Mirror support 2
79G Mirror base
BP 2 screws (2x5mm)
RP 3 screws (1.5x5mm)
SP 2 screws (1.5x4mm)

A

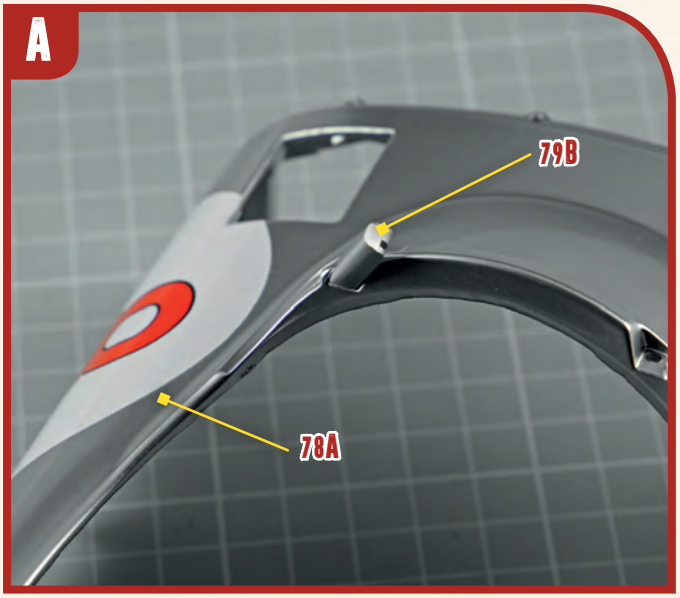

B

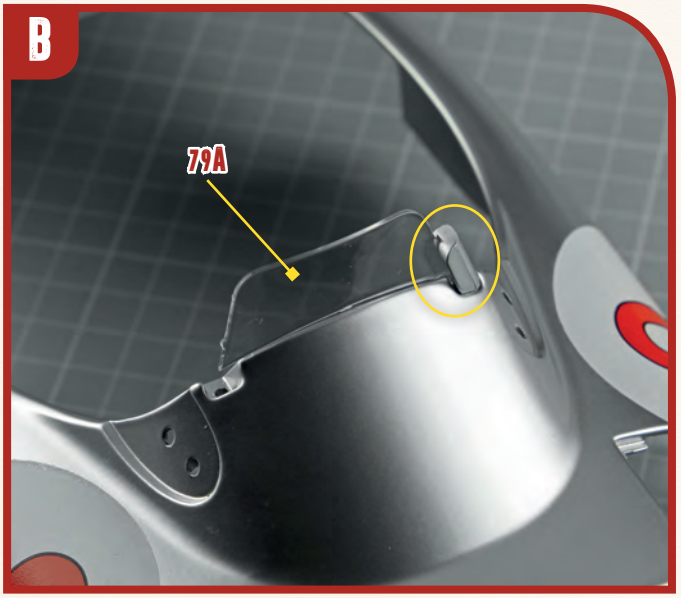

C

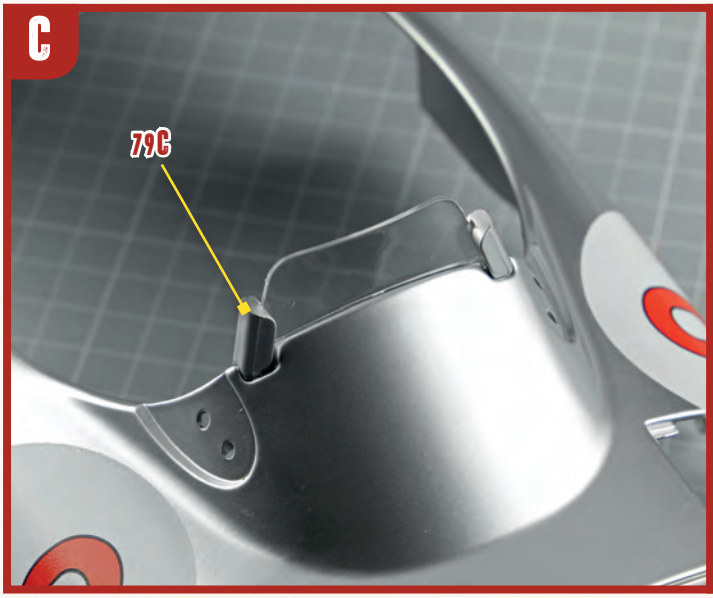

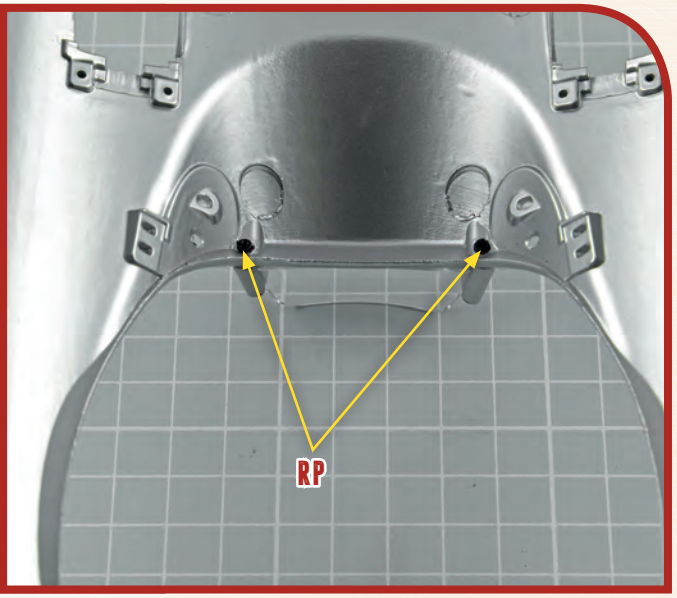

D

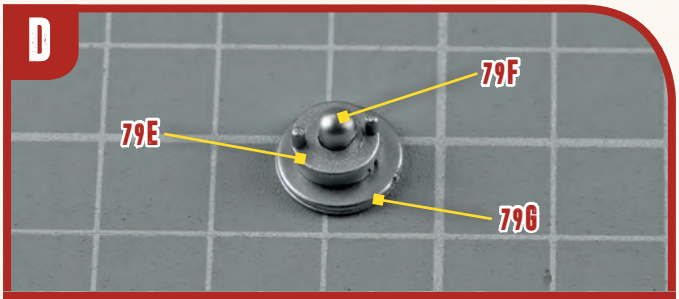

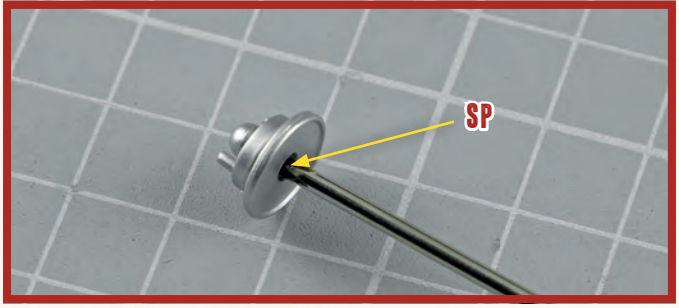

E

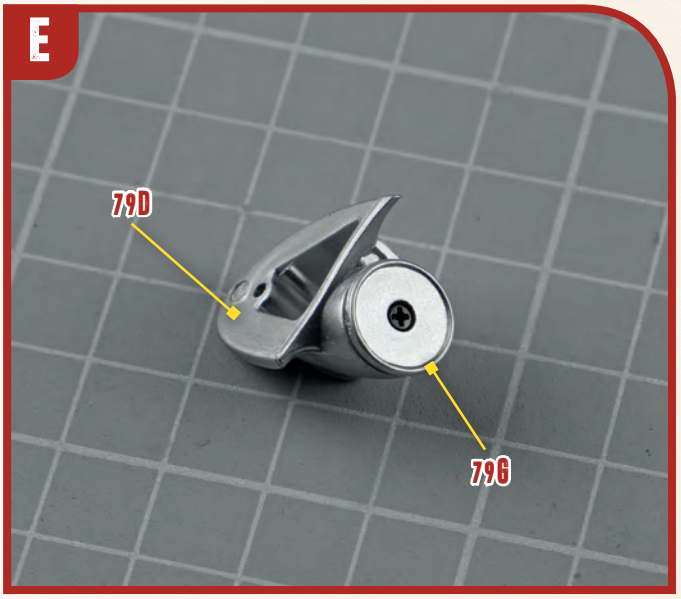

F

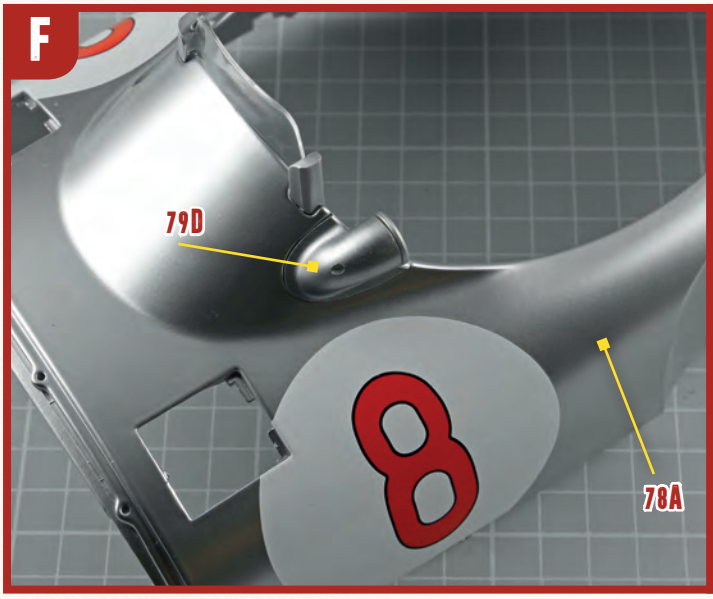

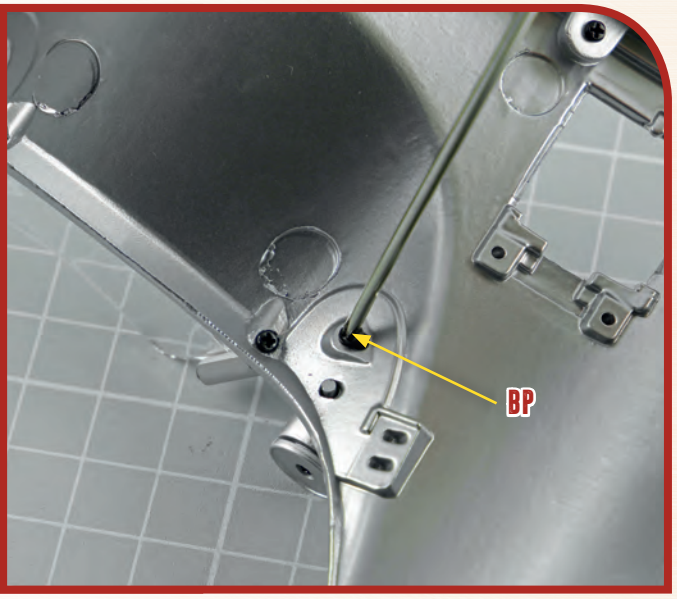

80 PARTS LIST

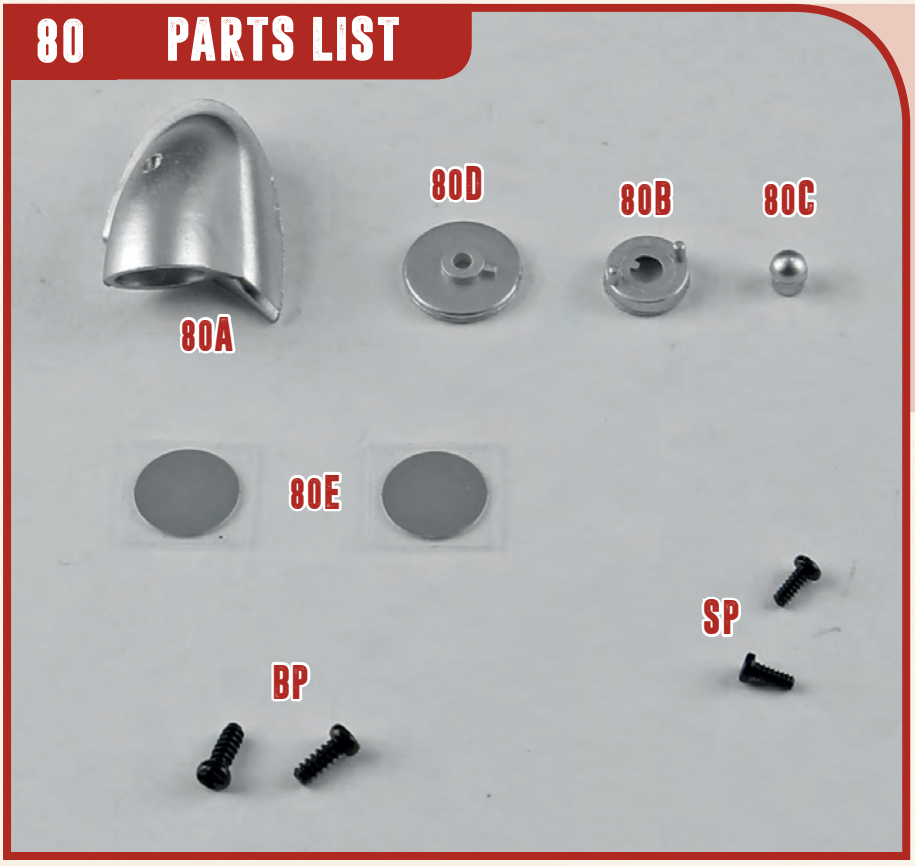

80A Right side-view mirror body
80B Mirror support 1
80C Mirror support 2
80D Mirror base
80E Side-view mirrors lenses (x2)

BP 2 screws (2x5mm)
SP 2 screws (1.5x4mm)

A

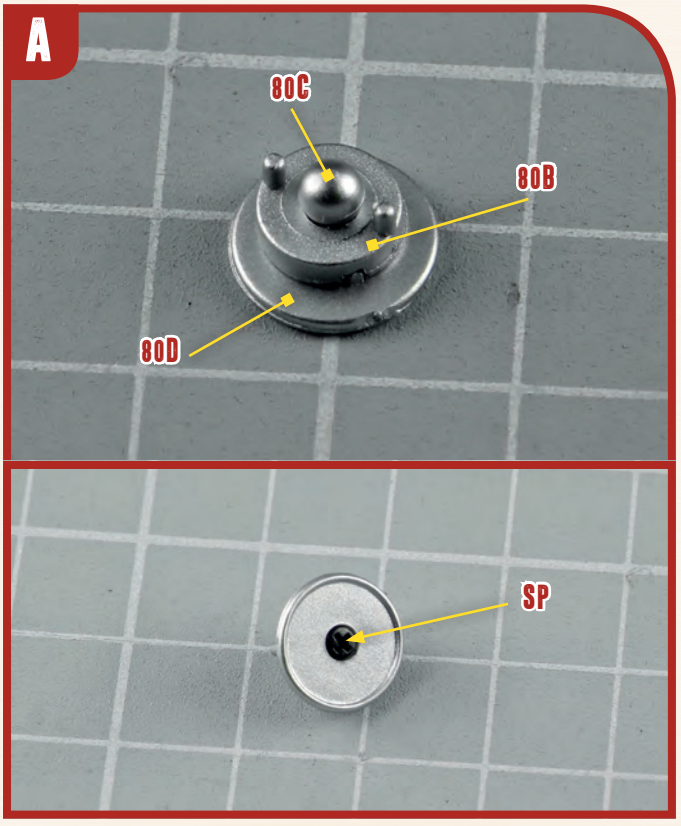

B

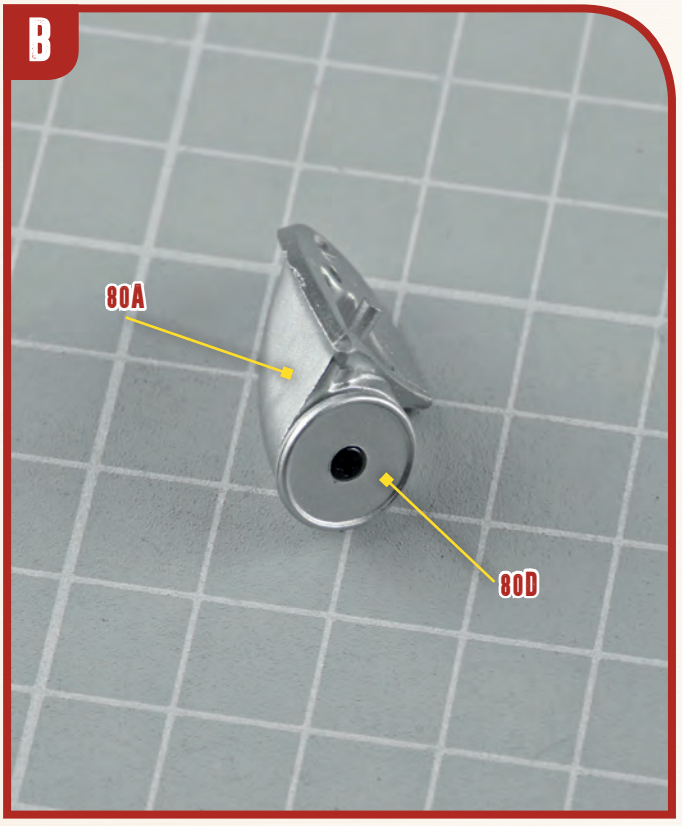

C

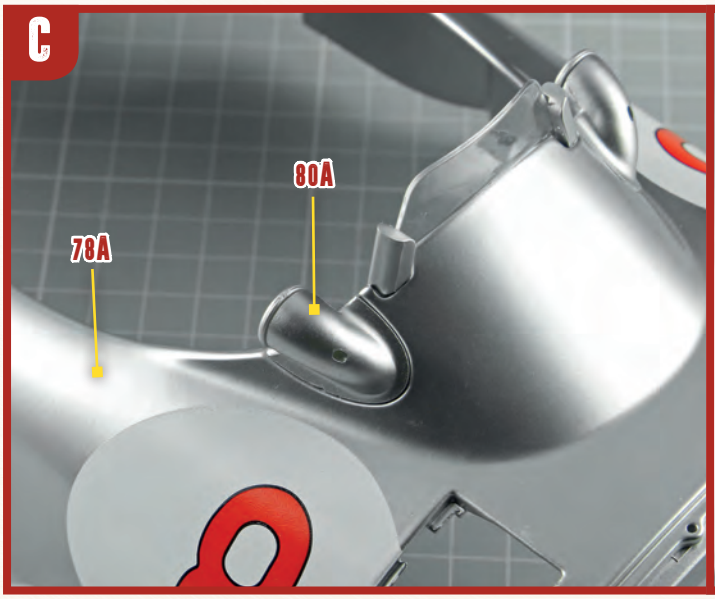



D

Remove protective films from both lenses 80E

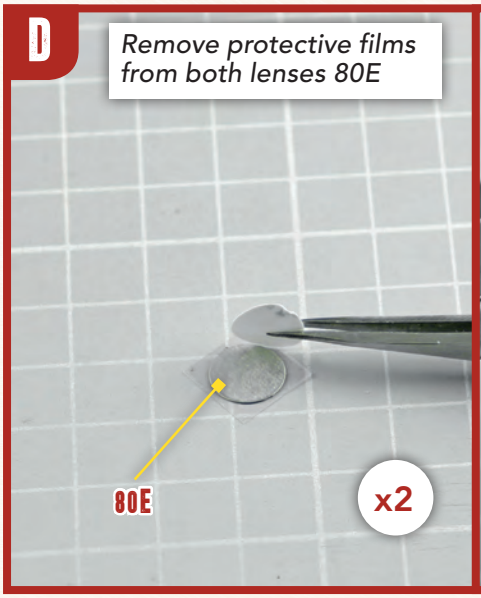

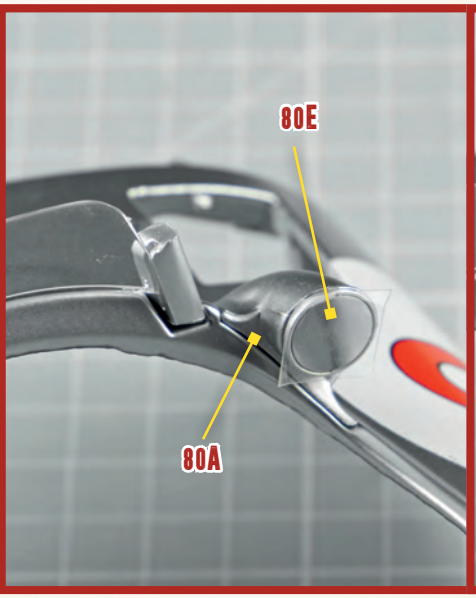



E

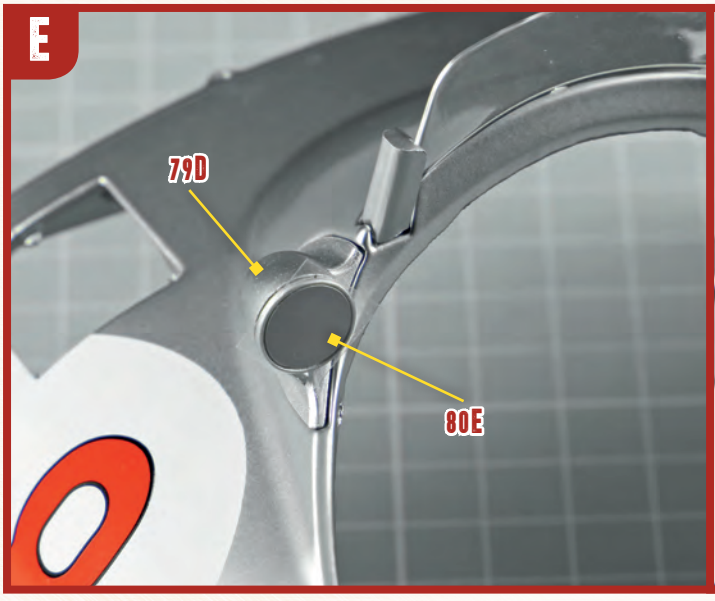



81 PARTS LIST



81A	Vent hole cover (L)
81B	Duct part A (L)
81C	Duct part B (L)
81D	Bracket 1 (L)
81E	Rod
81F	Knob
81G	Bracket 2
AP	2 screws (1.7x4mm)
EP	2 screws (2x4mm)
AAM	3 screws (1.7x3mm)
CM	4 screws (1.7x4mm)

A

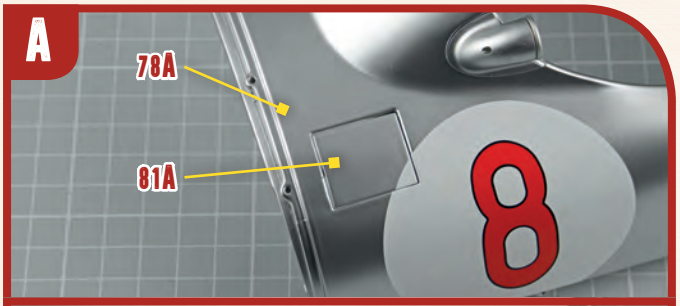

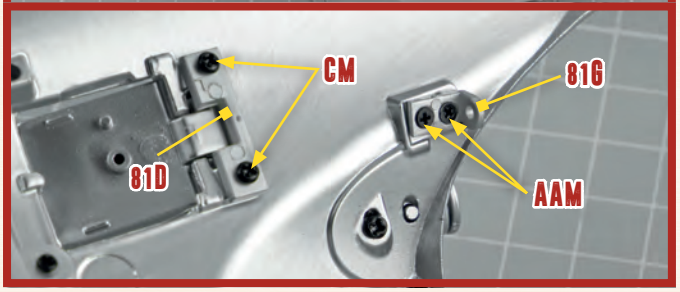

B

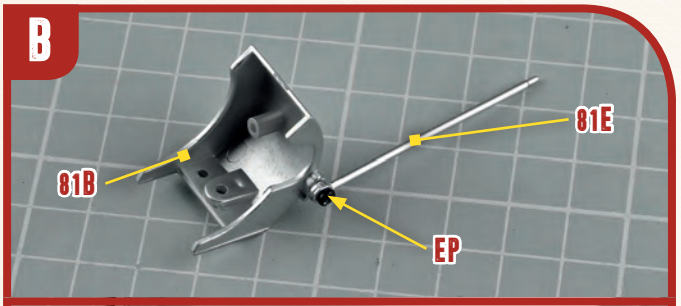

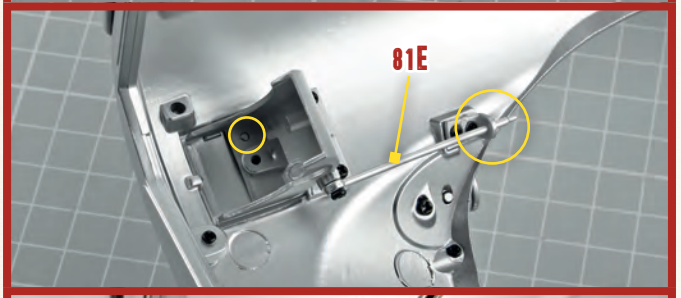

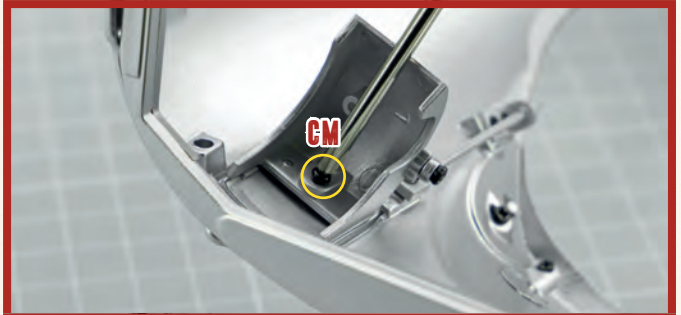

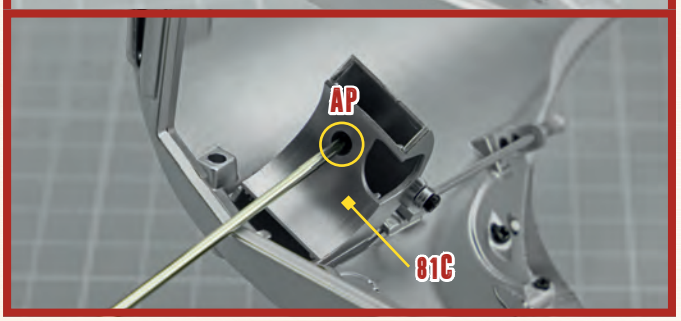

C

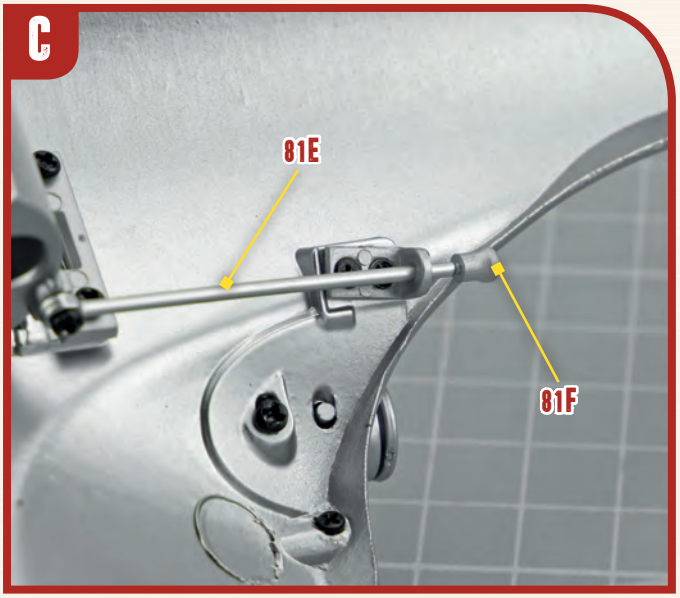

82 PARTS LIST

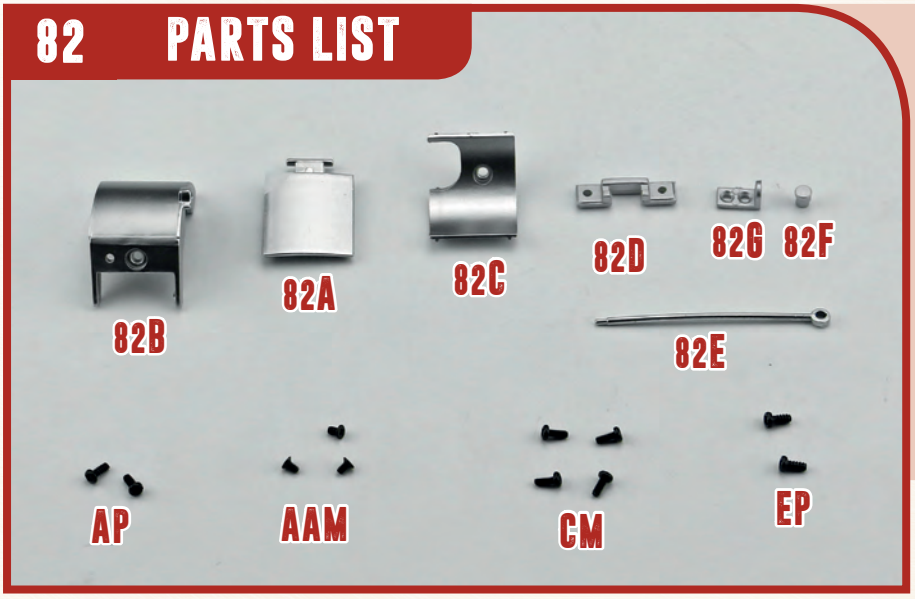

82A	Vent hole cover (R)
82B	Duct part A (R)
82C	Duct part B (R)
82D	Bracket 1 (R)
82E	Rod
82F	Knob
82G	Bracket 2
AP	2 screws (1.7x4mm)
EP	2 screws (2x4mm)
AAM	3 screws (1.7x3mm)
CM	4 screws (1.7x4mm)

A



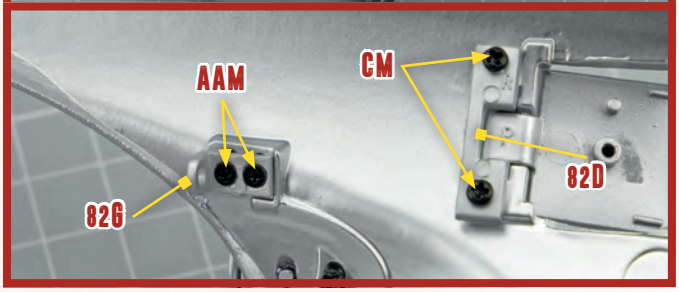

B

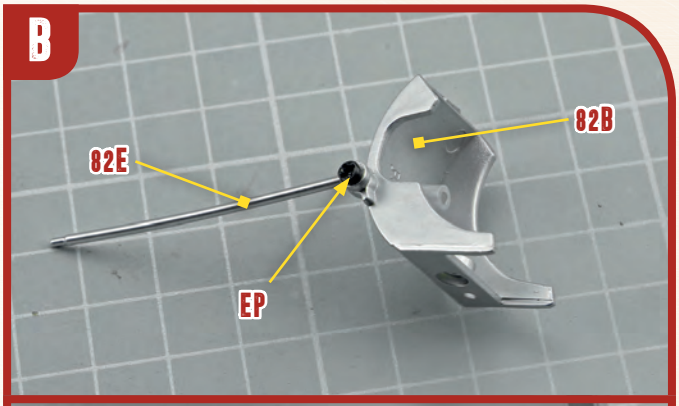



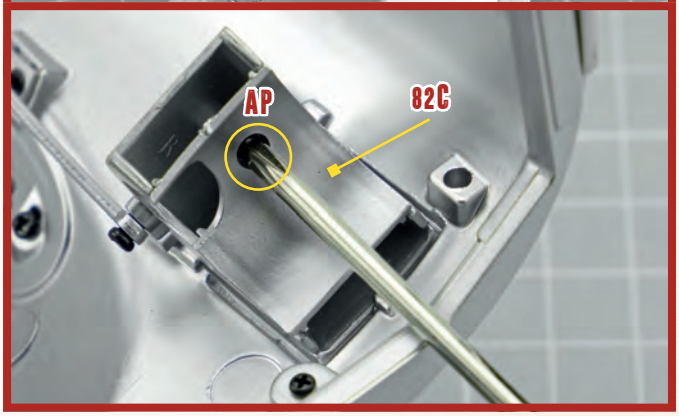

C

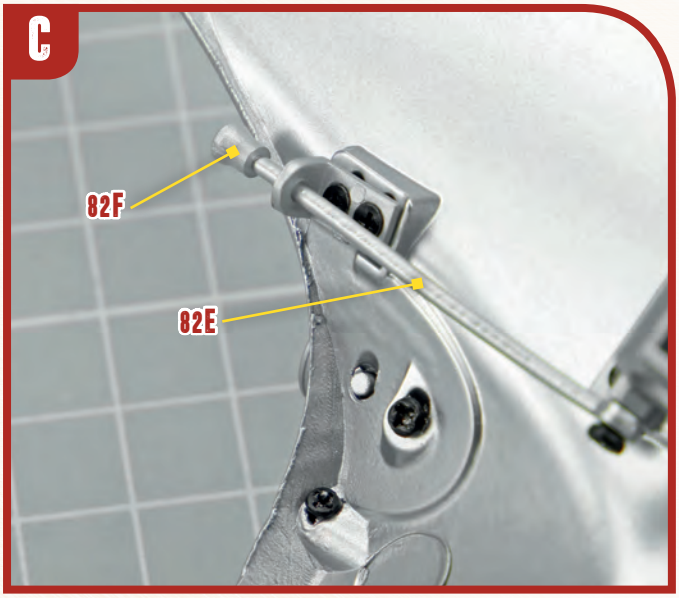

83 PARTS LIST

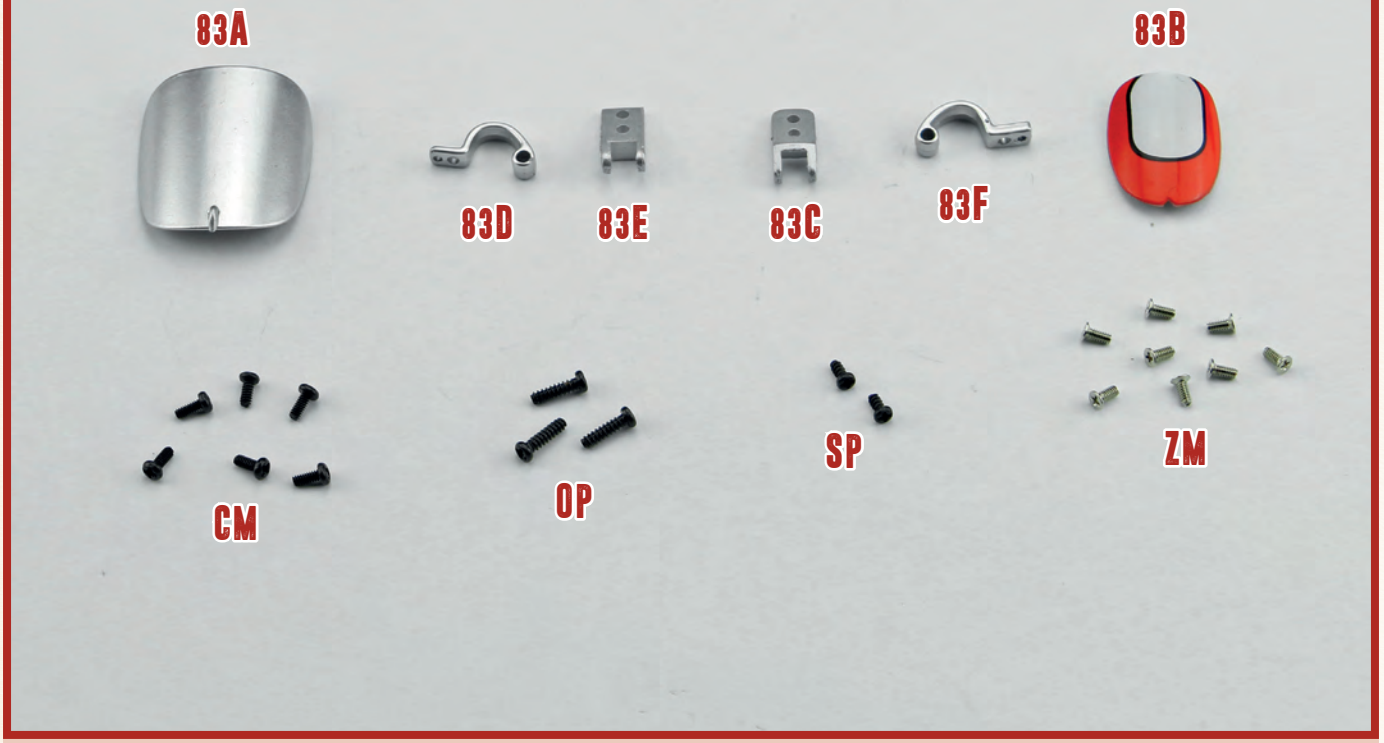

83A Fuel tank cap cover
83B Oil tank cap cover
83C Fuel tank bracket
83D Fuel tank hinge
83E Oil tank bracket
83F Oil tank hinge
OP 3 screws (2x7mm)
SP 2 screws (1.5x4mm)
CM 6 screws (1.7x4mm)
ZM 8 screws (1.7x4mm)

A

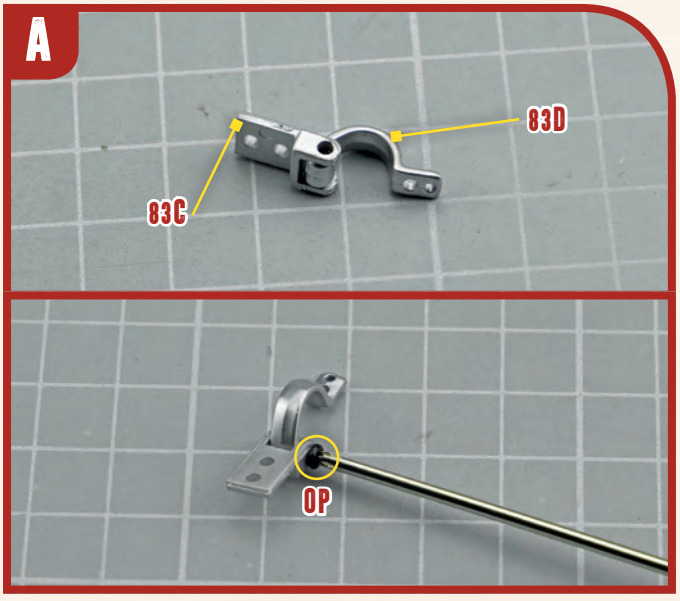

B

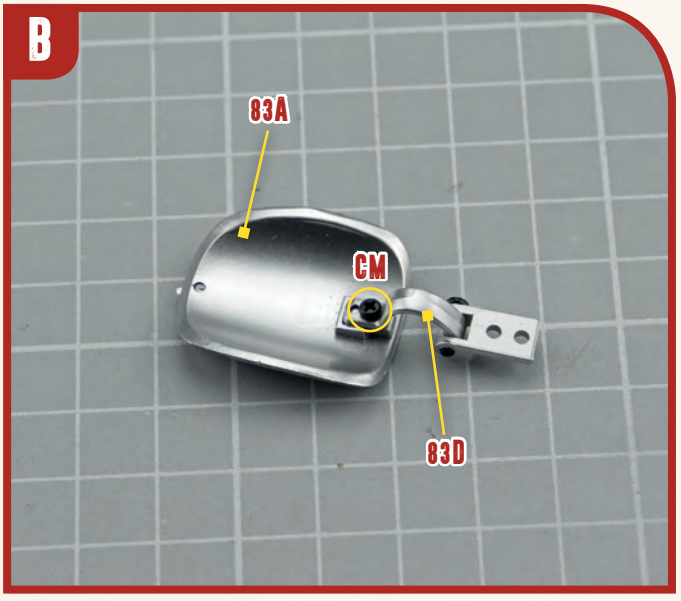

C

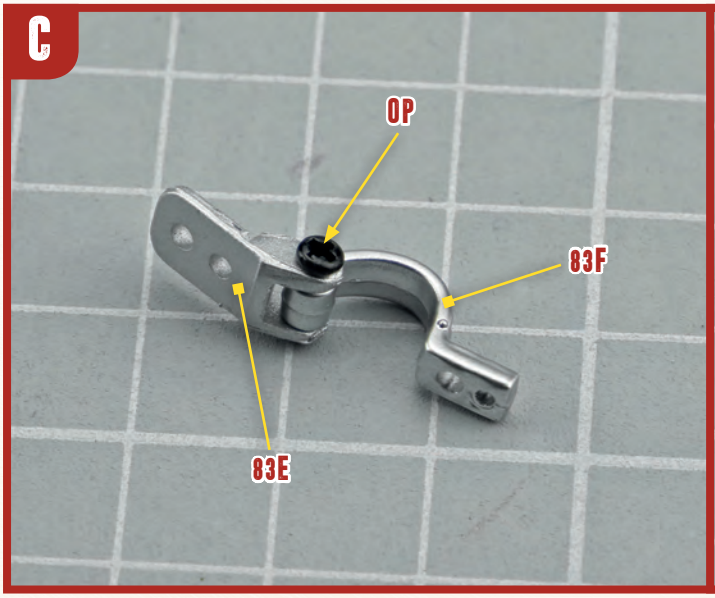

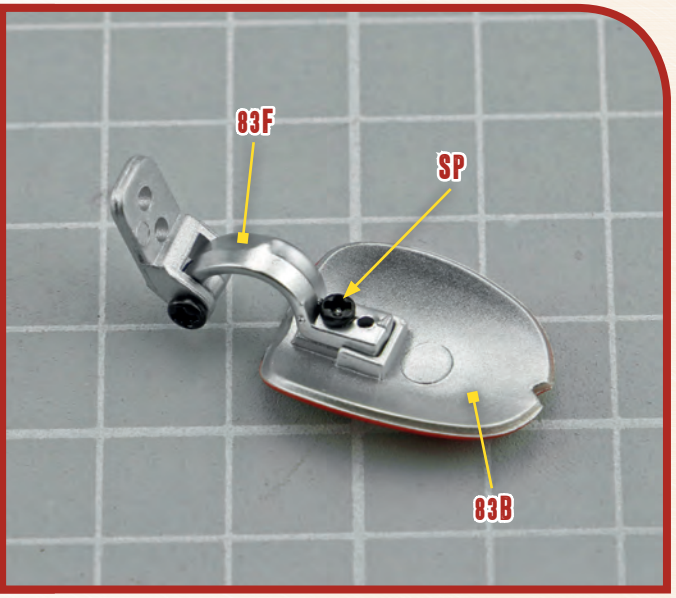

D

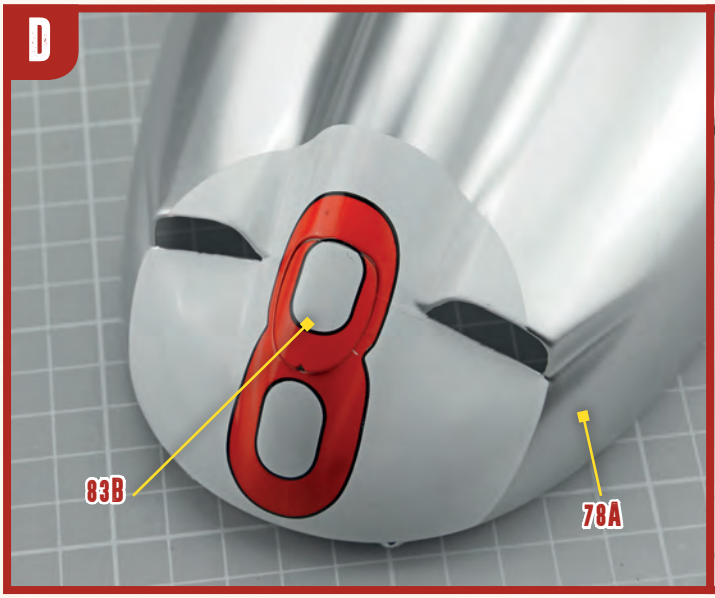

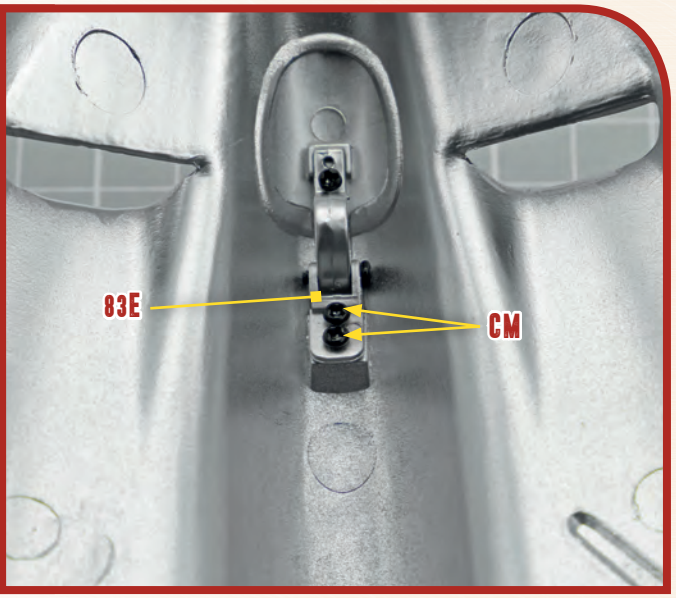

E

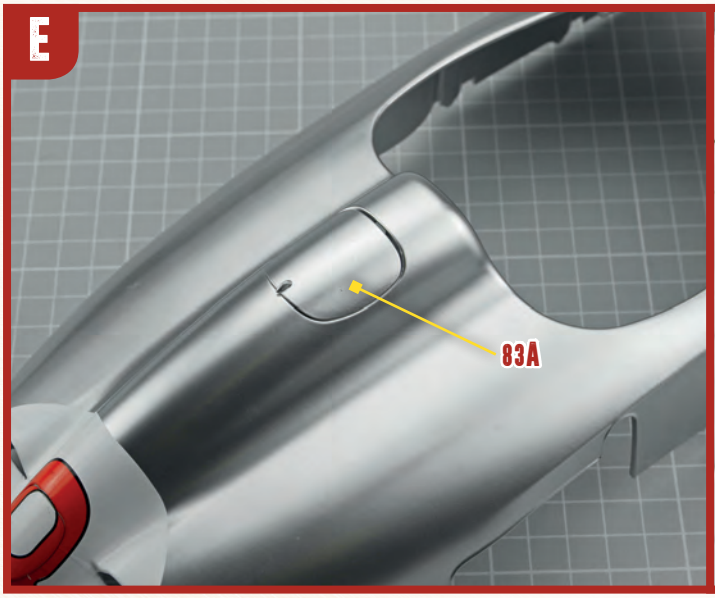

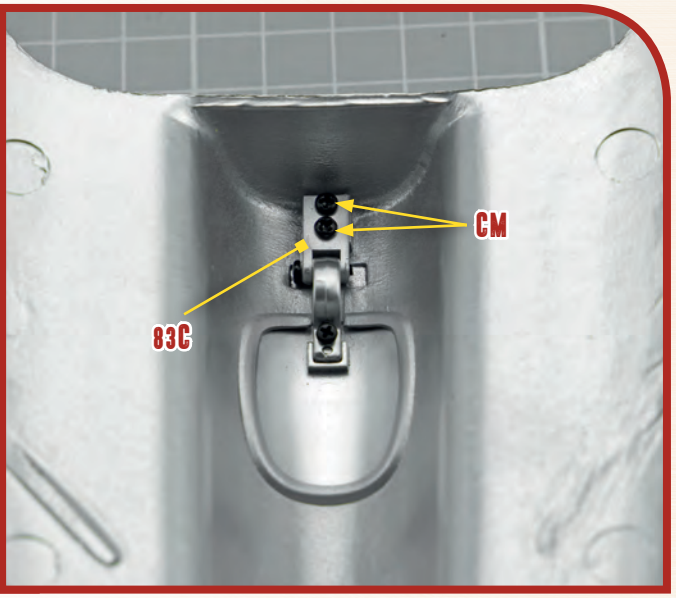

F

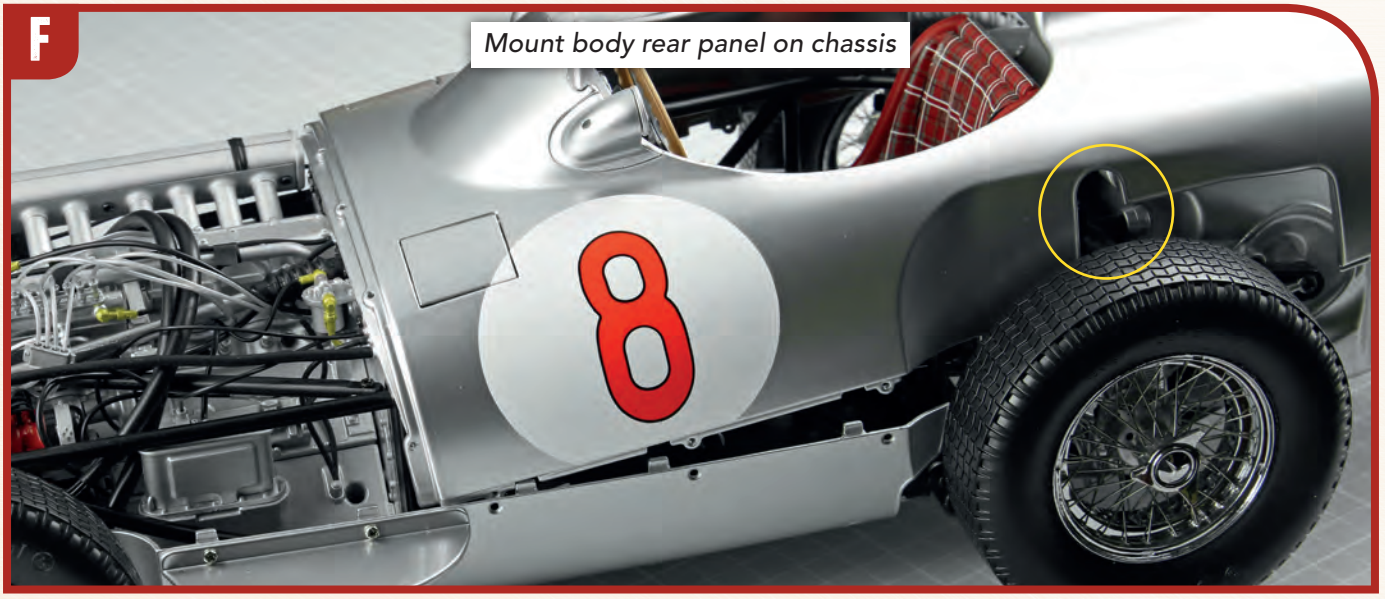

G

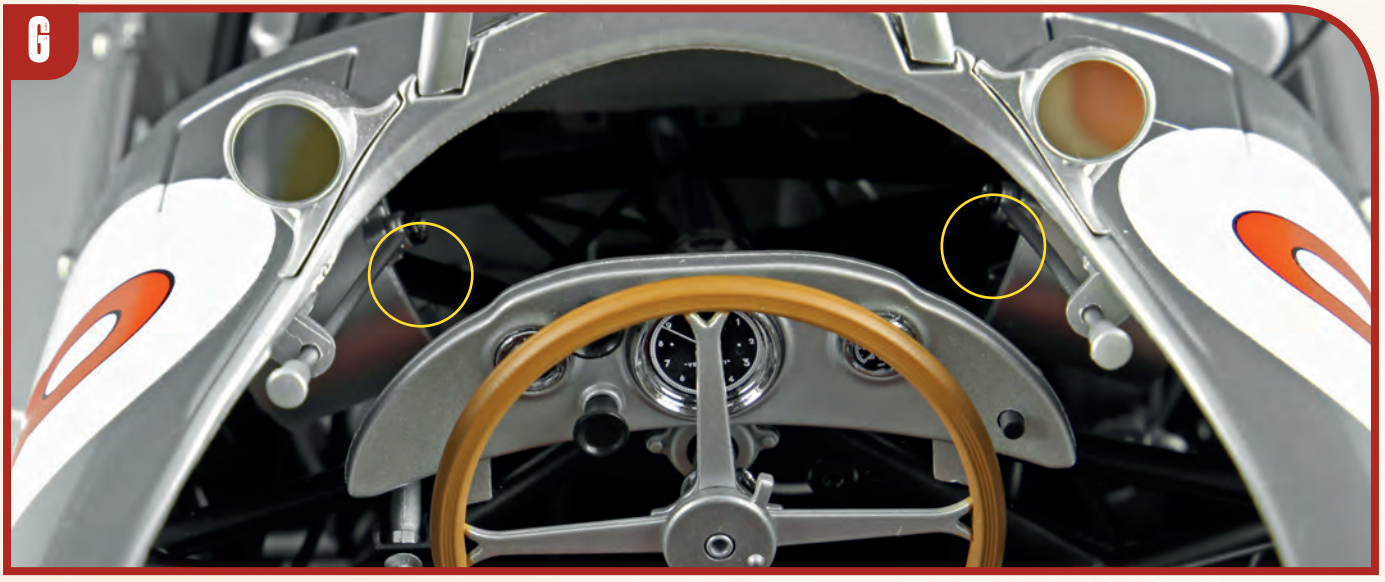

H

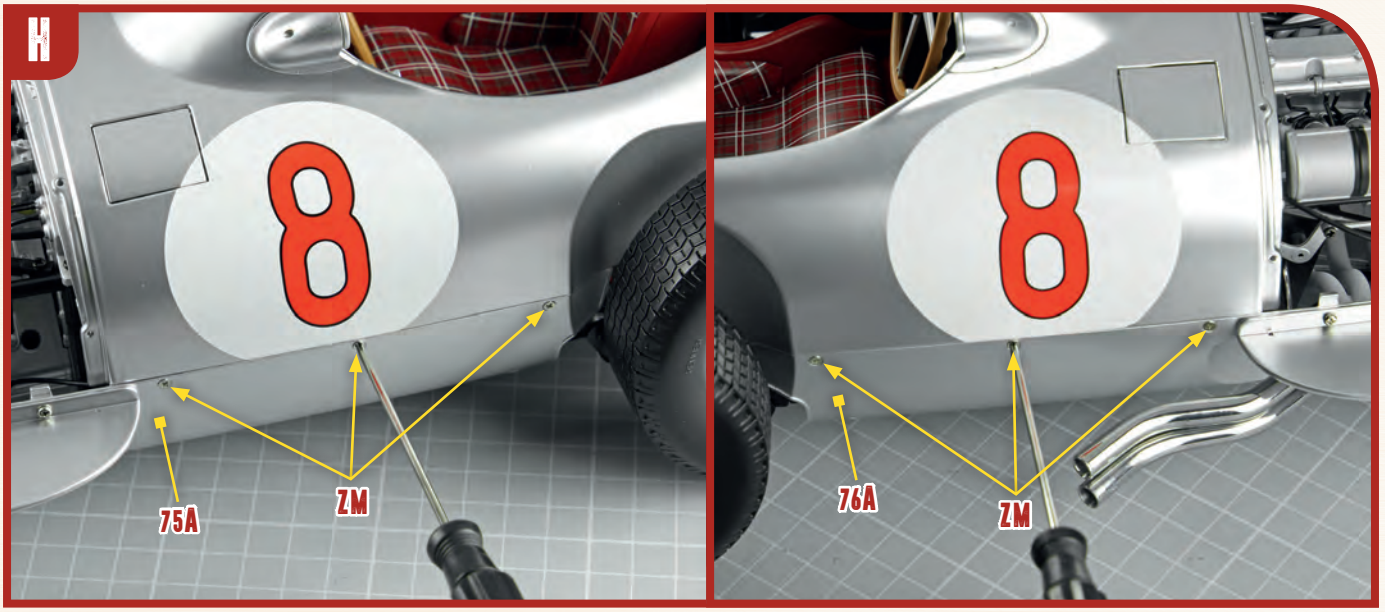

84 PARTS LIST

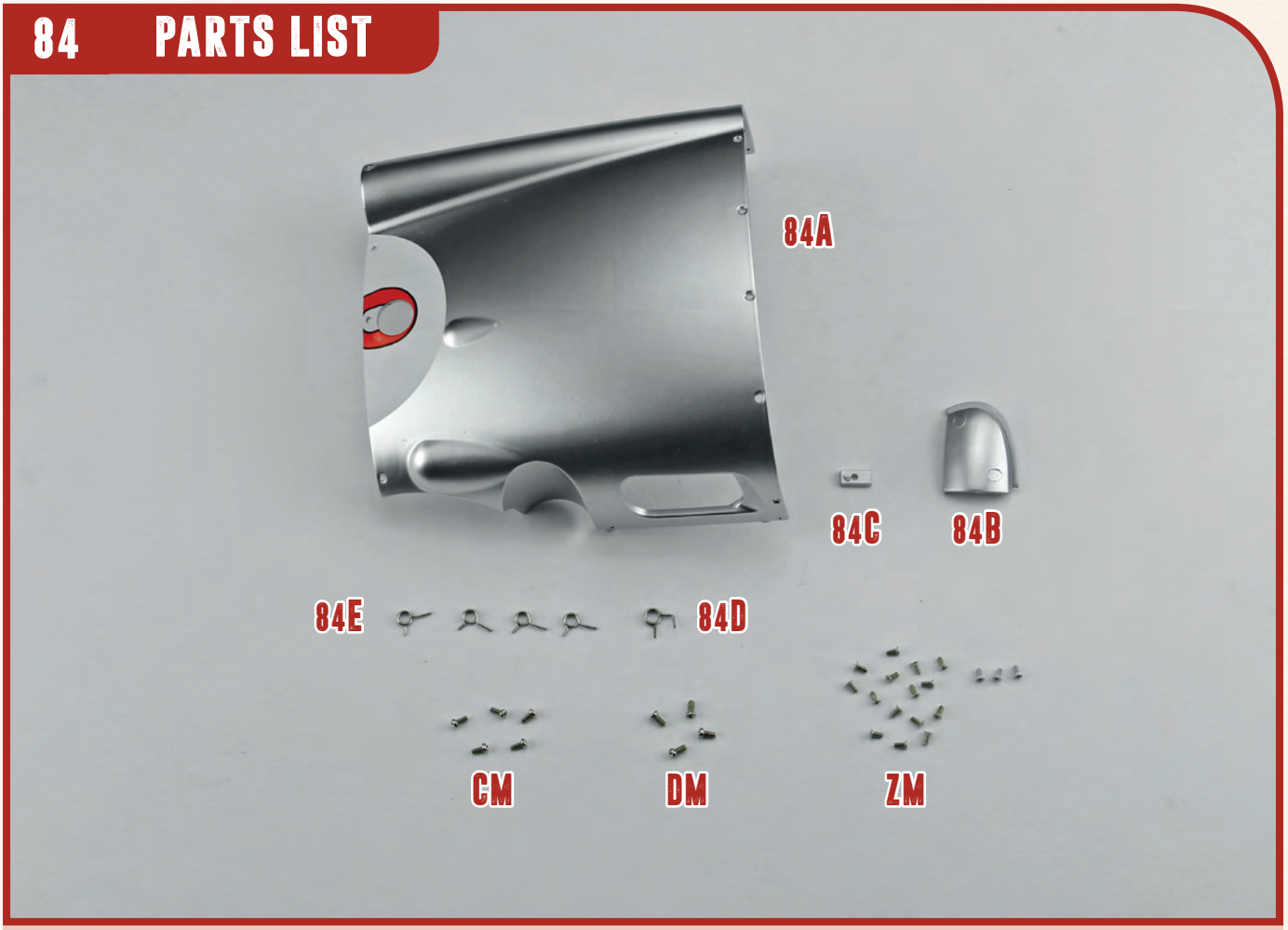

84A Body front panel
84B Front right wheel arch panel
84C Mounting plate
84D Fixing pin 1
84E Fixing pins 2 (x4)
CM 5 screws (1.7x4mm)
DM 4 screws (2x4mm)
ZM 18 screws (1.7x4mm)

A

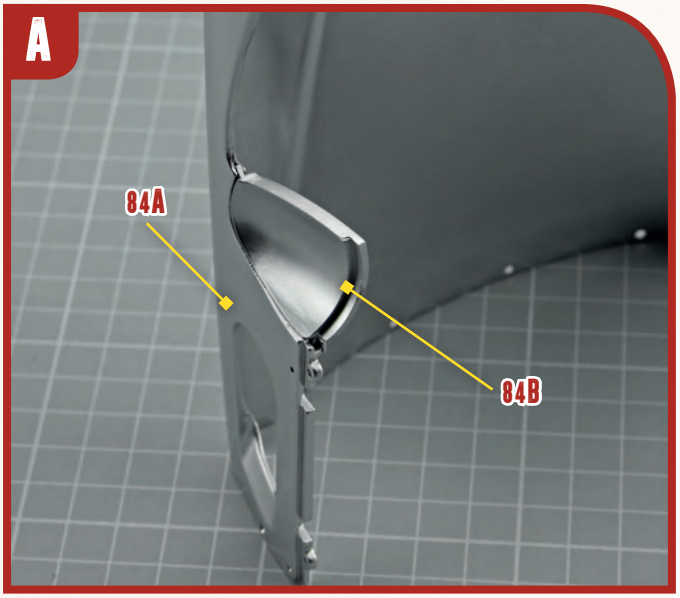

B

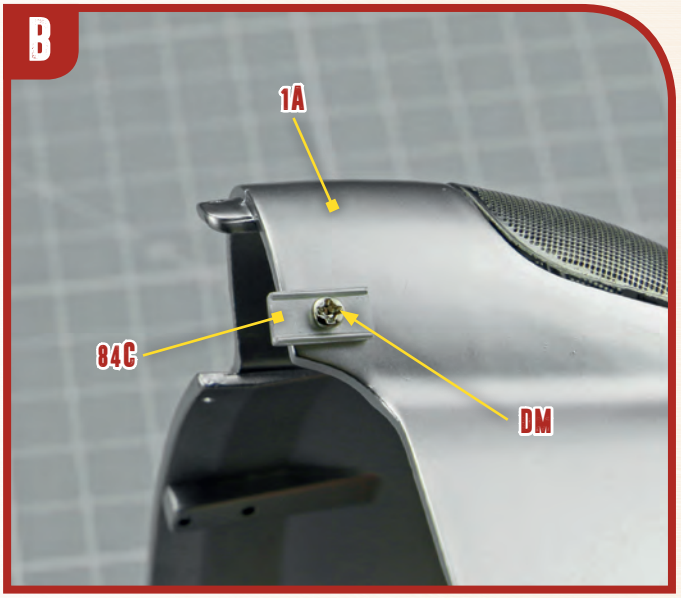

C

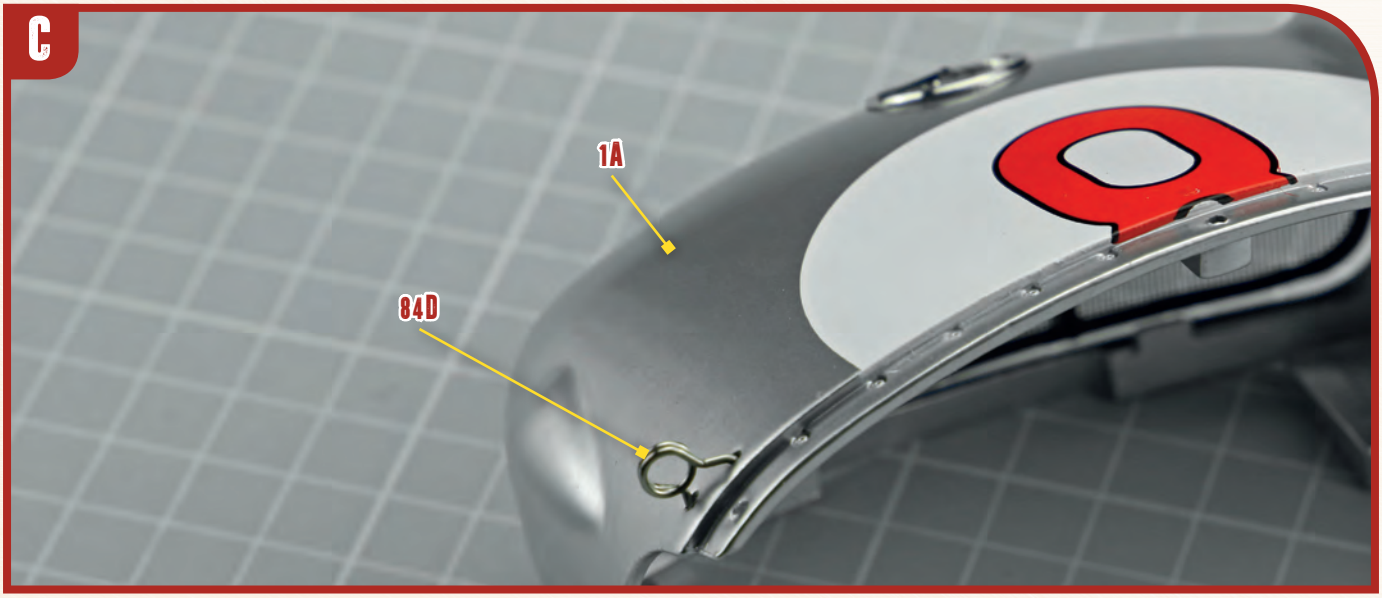

D

Temporarily remove mudguards 77A and 77B

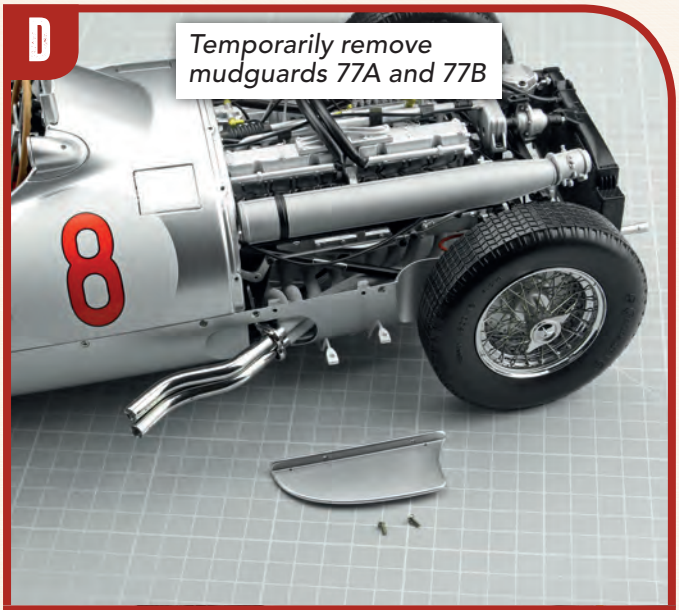

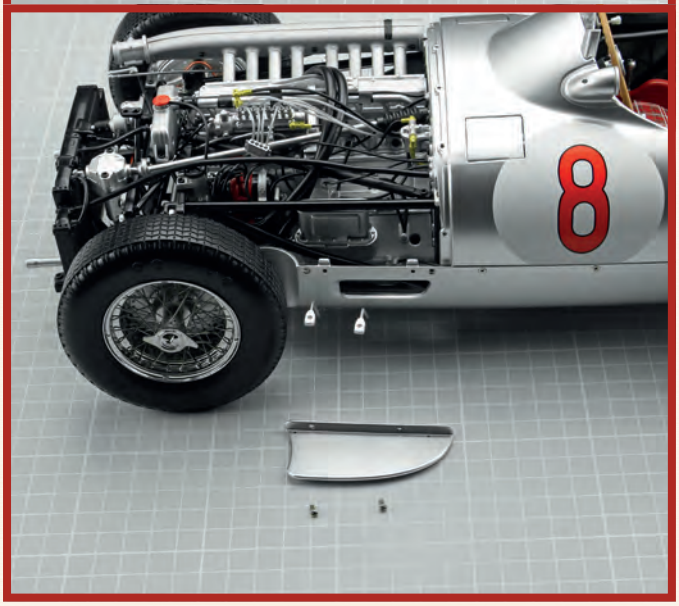

E

Mount nose 1A on chassis

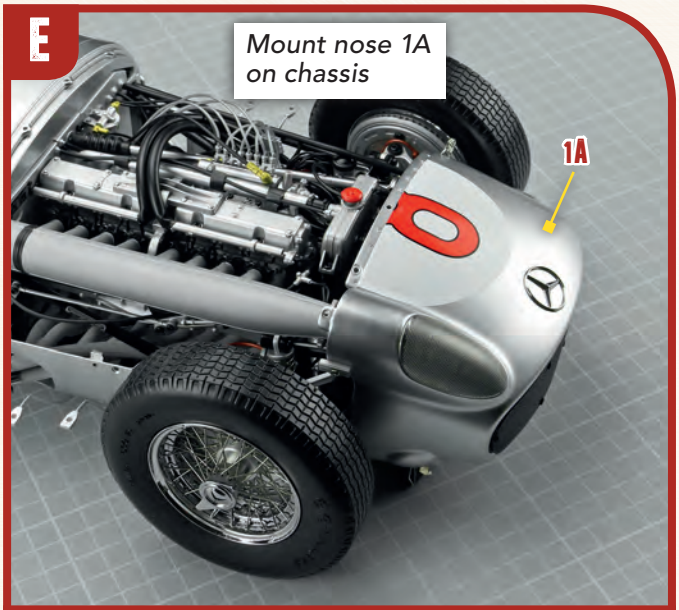

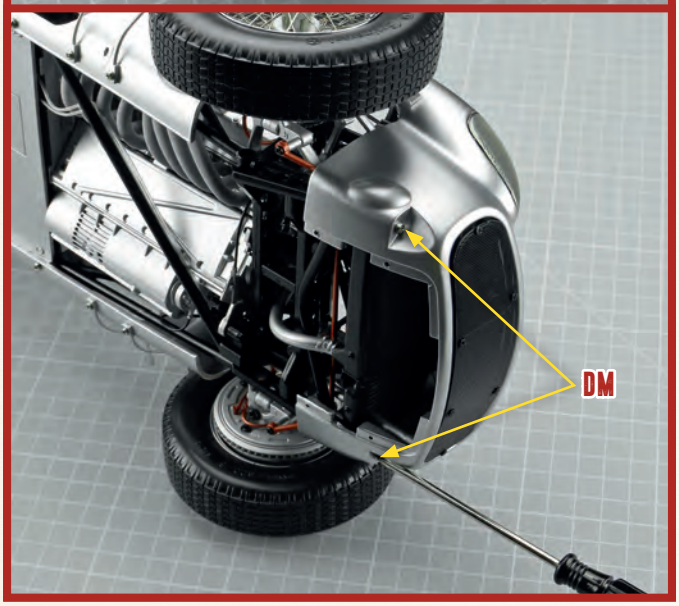

F

Mount body front panel 84A on chassis

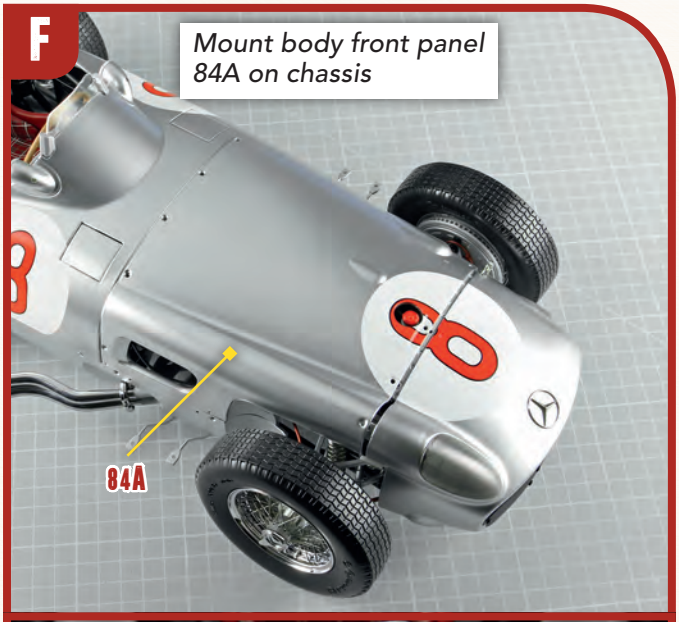

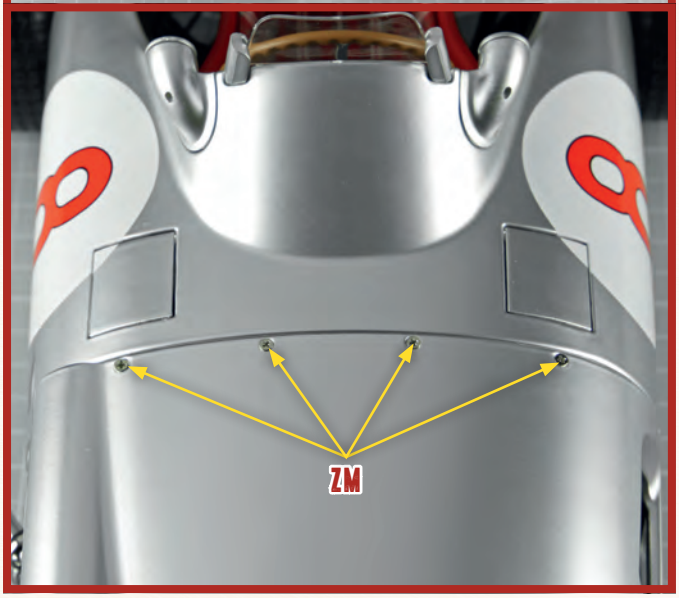

G

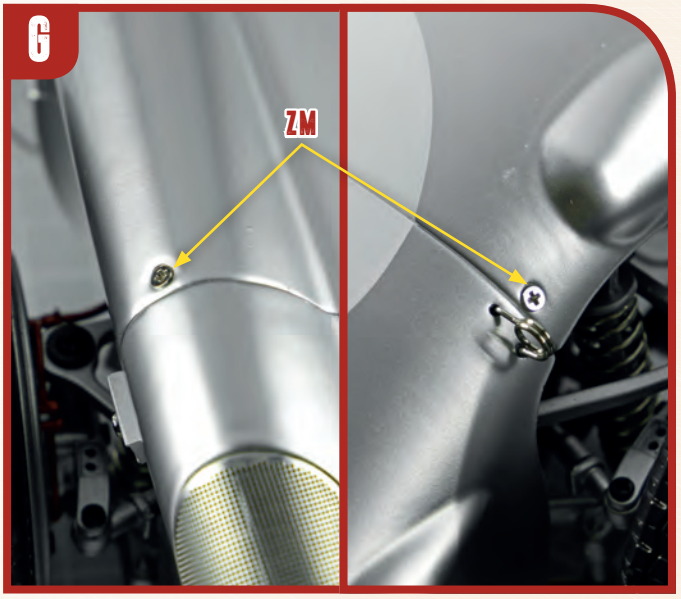

H

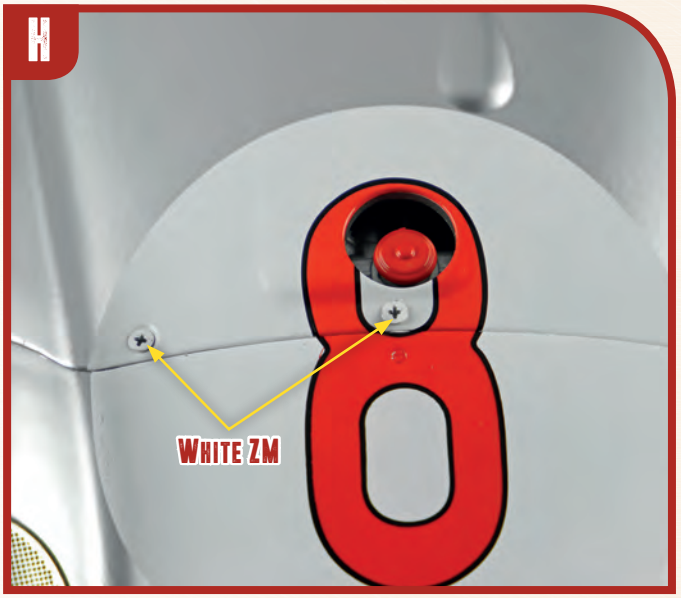

I

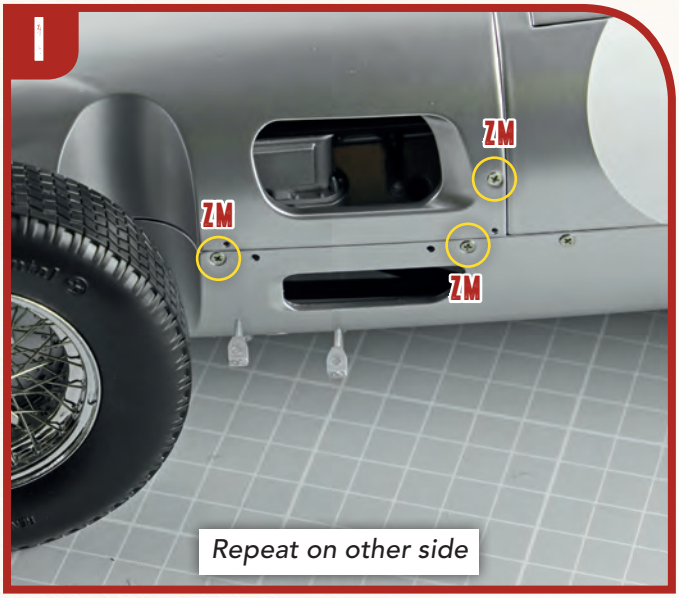

Repeat on other side

J



Put mudguards 77A and 77B back in place

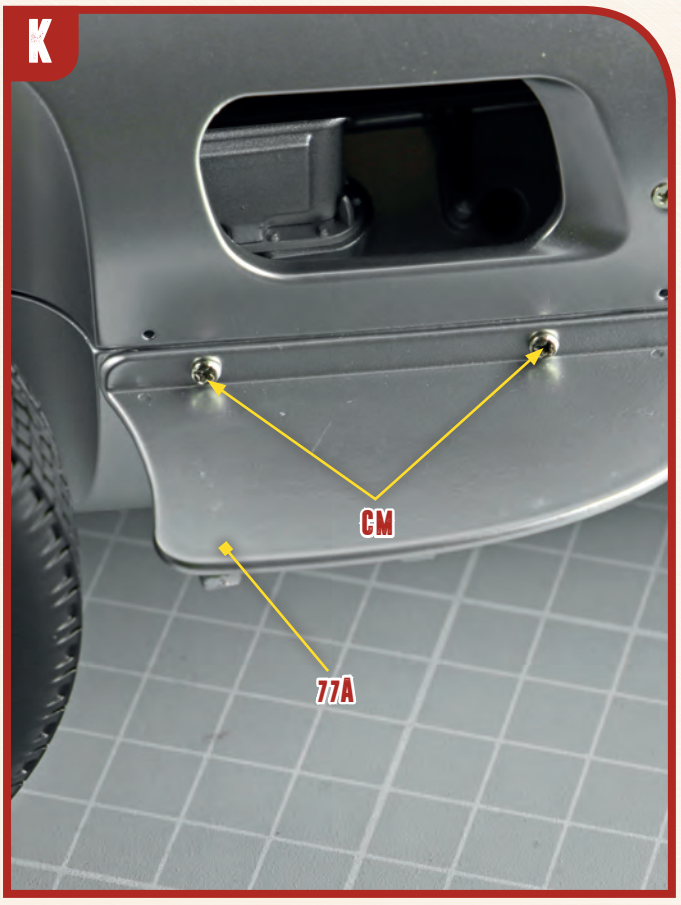
K
CM
77A

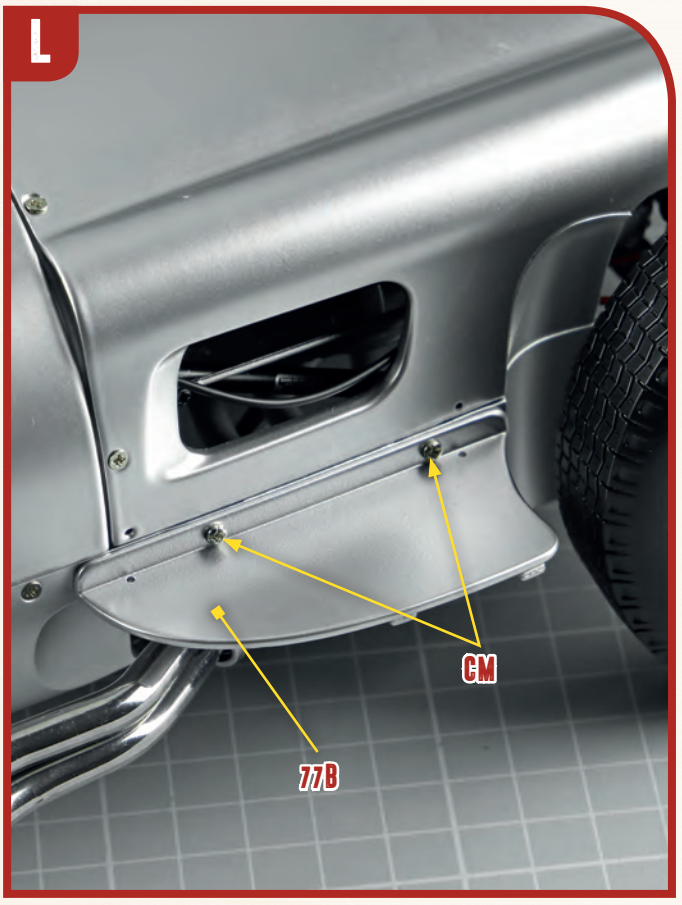
L
CM
77B

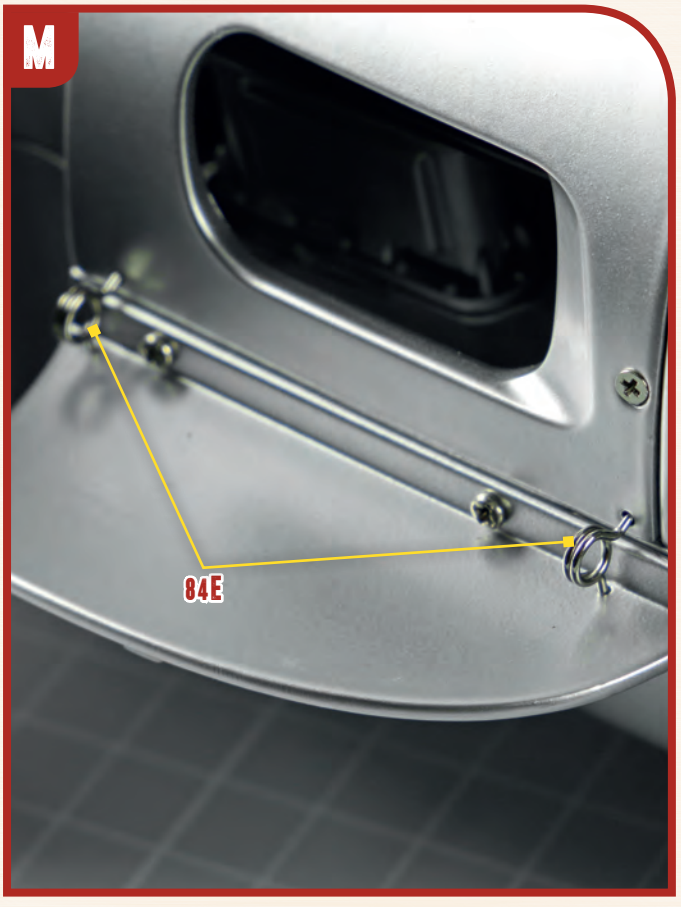
M
84E

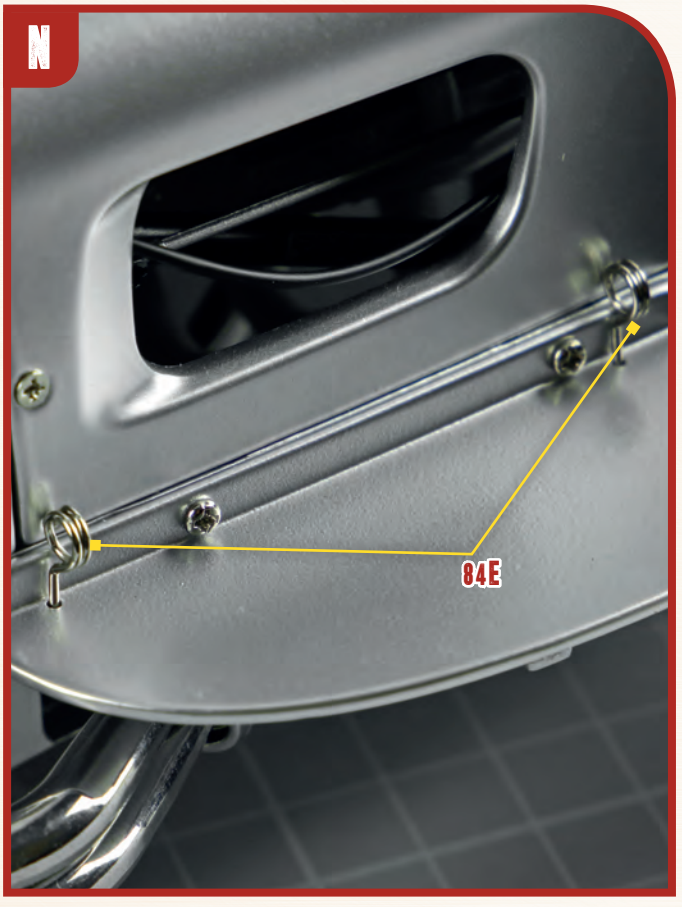
N
84E

85 PARTS LIST



85A Rear bottom panel
85B Front bottom panel

ABM 5 screws (1.7x5mm)
ZM 8 screws (1.7x4mm)

A

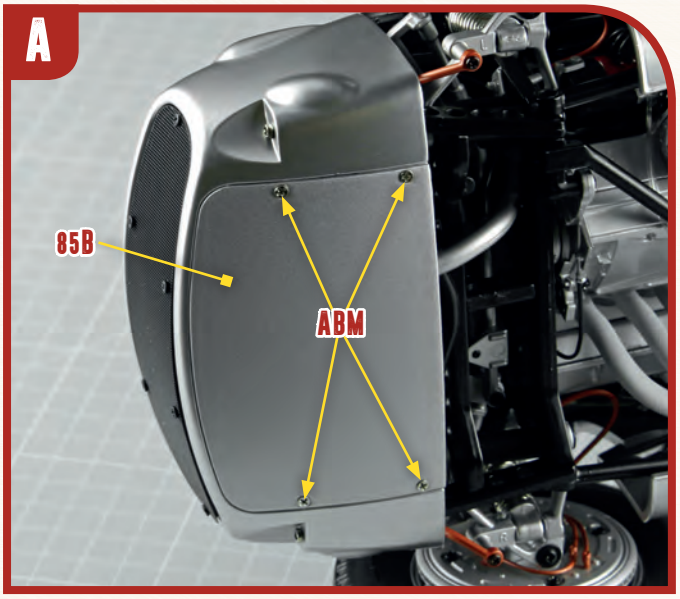

B

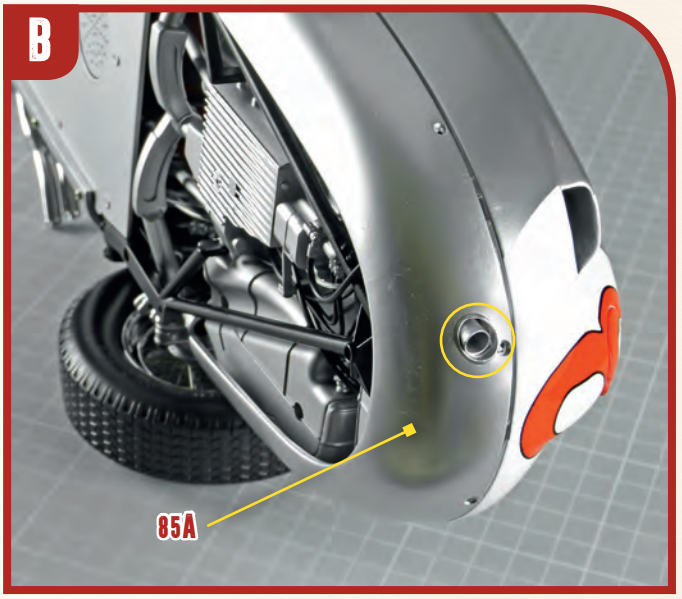

C

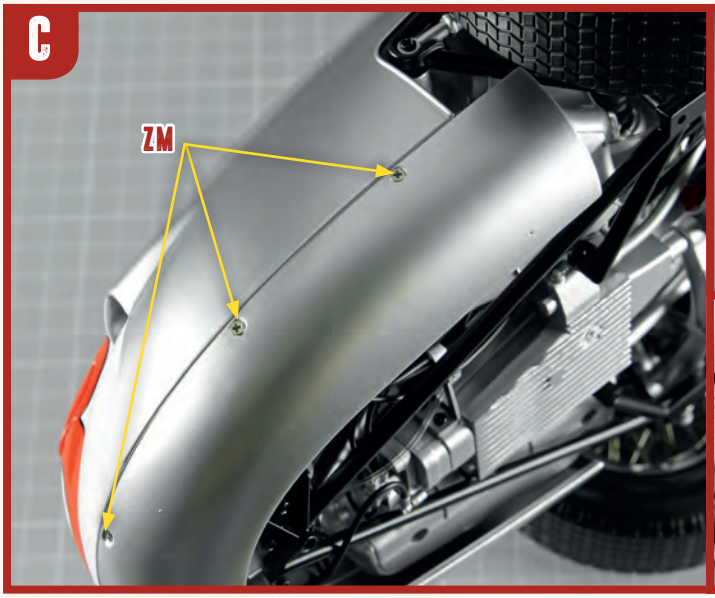





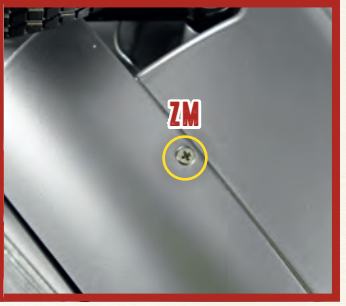



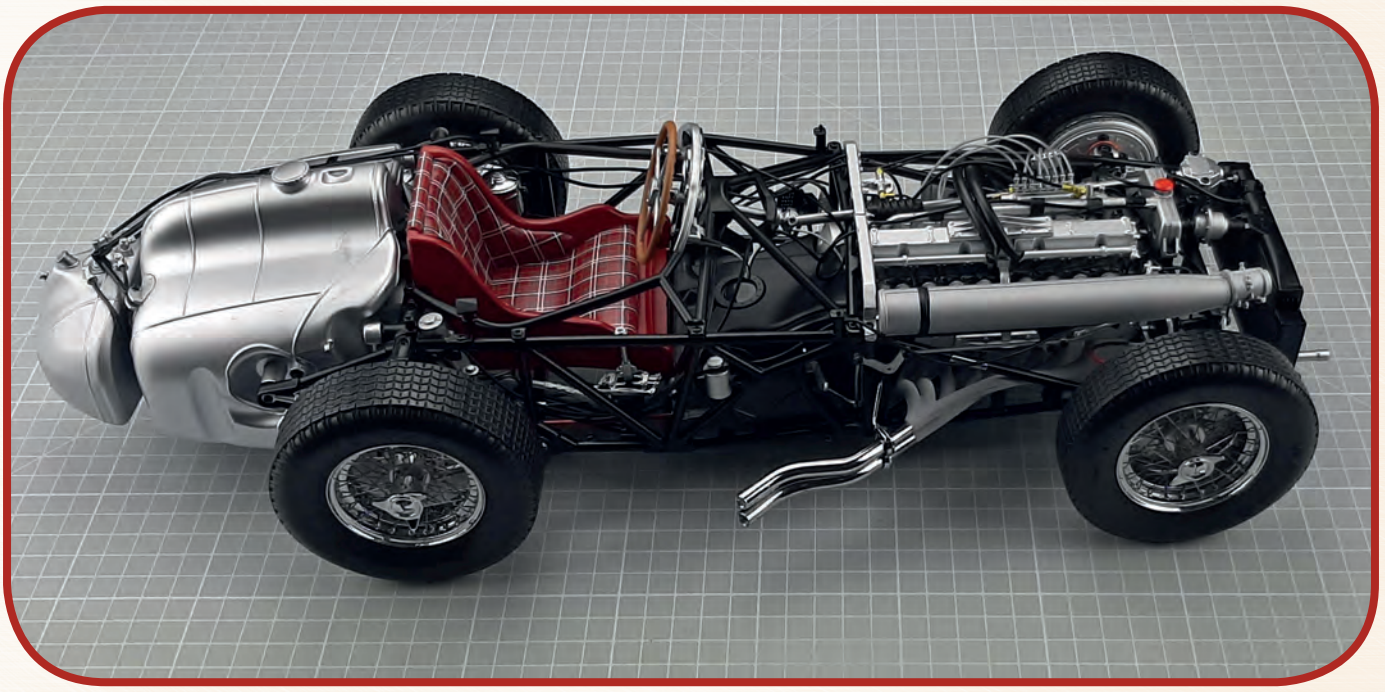

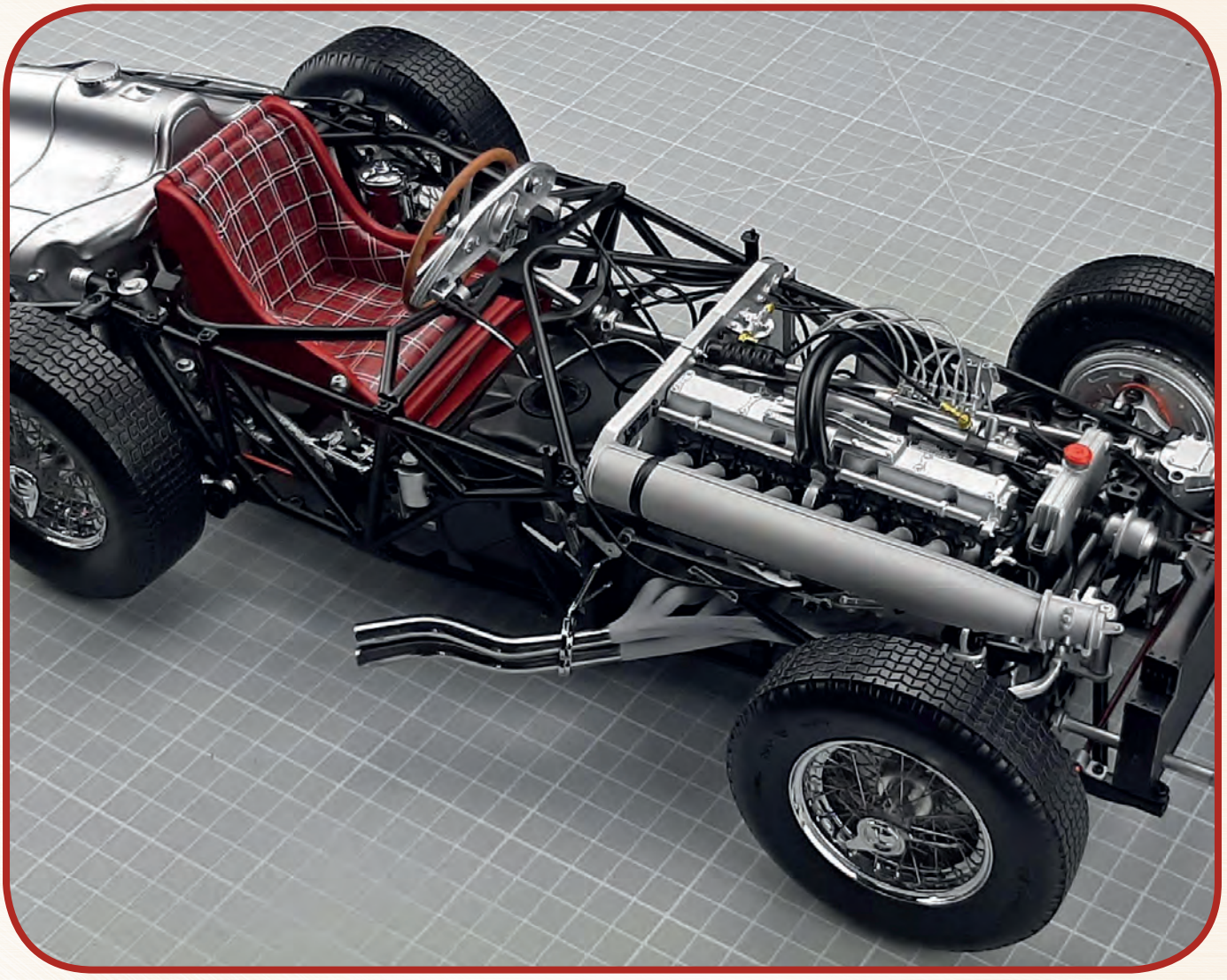


8
8
8


8
8









Kit details

Your Mercedes-Benz W 196 R full kit is broken down as follows:	
PACK 1	#2, #4–11, #13
PACK 2	#14–26
PACK 3	#27–39
PACK 4	#40–47
PACK 5	#48–60
PACK 6	#61–68
PACK 7	#69–71
PACK 8a	#72–77, #79–83, #85
PACK 8b	#78
PACK 9	#1, #3, #12, #84




8



ixo COLLECTIONS